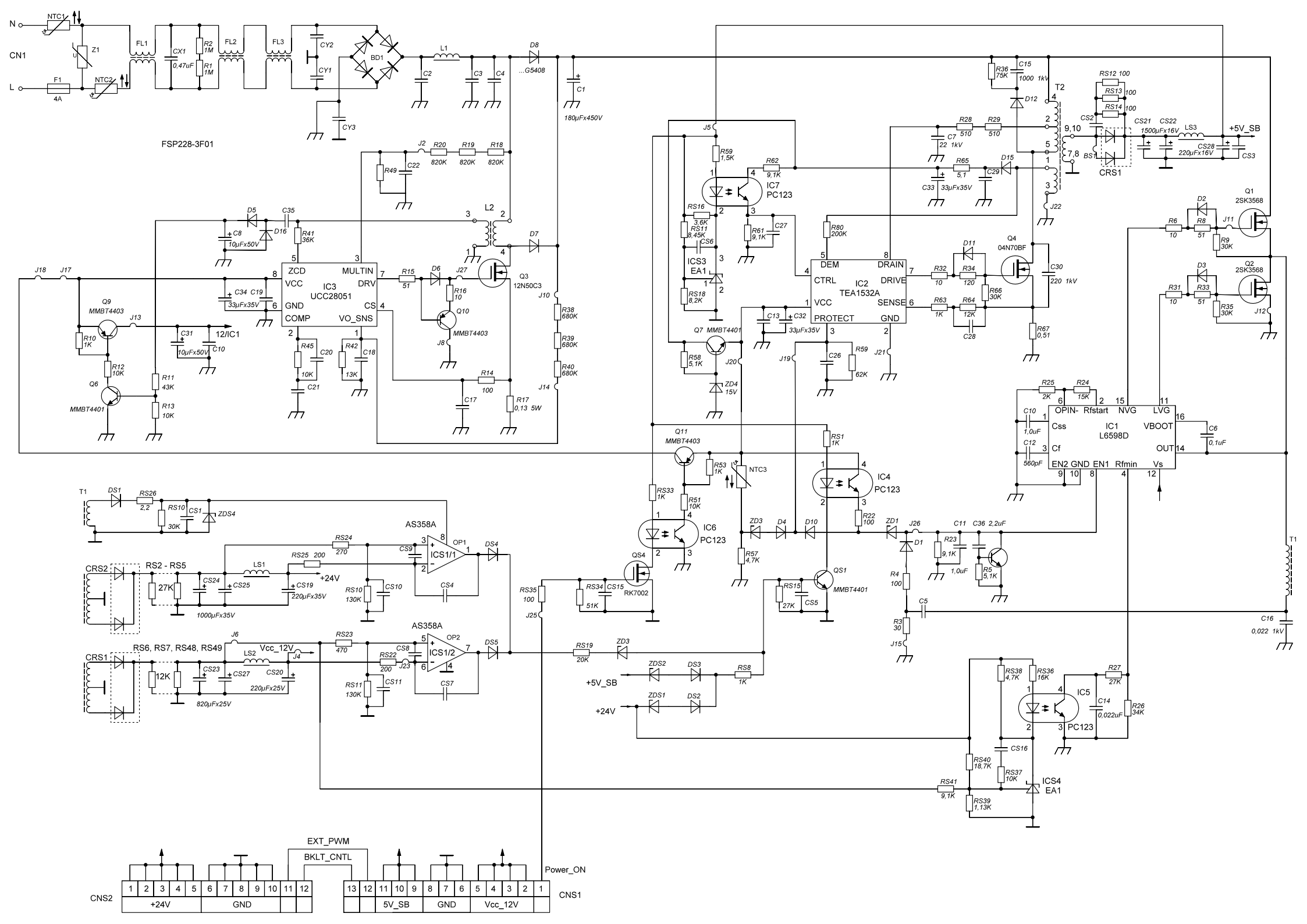

N
L
CN1
NTC1
NTC2
Z1
F1
4A
FL1
CX1
0,47uF
R2
1M
R1
1M
FL2
FL3
CY2
CY1
CY3
BD1
L1
C2
C3
C4
D8
...G5408
C1
180µFx450V
FSP228-3F01
J2
R20
820K
R19
820K
R18
820K
R49
C22
D5
C35
C8
10µFx50V
D16
R41
36K
L2
D7
J18
J17
IC3
UCC28051
ZCD
VCC
GND
COMP
MULTIN
DRV
CS
VO_SNS
C34
C19
33µFx35V
R15
51
D6
J27
R16
10
Q3
12N50C3
Q10
MMBT4403
J8
J10
R38
680K
R39
680K
R40
680K
J14
Q9
MMBT4403
J13
R10
1K
R12
10K
Q6
MMBT4401
R11
43K
R13
10K
C31
10µFx50V
C10
12/IC1
R45
10K
C20
C21
R42
13K
C18
R14
100
C17
R17
0,13 5W
J5
R59
1,5K
R62
9,1K
IC7
PC123
RS16
3,6K
RS11
8,45K
CS6
ICS3
EA1
R61
9,1K
C27
R18
8,2K
R80
200K
IC2
TEA1532A
DEM
CTRL
VCC
PROTECT
DRAIN
DRIVE
SENSE
GND
C13
C32
33µFx35V
R58
5,1K
ZD4
15V
J20
J19
C26
R59
62K
J21
R36
75K
C15
1000 1kV
D12
T2
R28
510
R29
510
C7
22 1kV
R65
5,1
C29
D15
C33
33µFx35V
J22
RS12 100
RS13 100
RS14 100
CS2
CS21
CS22
1500µFx16V
LS3
CS28
220µFx16V
CS3
+5V_SB
BS1
CRS1
Q1
2SK3568
D2
R6
10
R8
51
J11
R9
30K
Q2
2SK3568
D3
R31
10
R33
51
R35
30K
J12
D11
Q4
04N70BF
R32
10
R34
120
R66
30K
C30
220 1kV
R63
1K
R64
12K
C28
R67
0,51
R25
2K
R24
15K
IC1
L6598D
OPIN-
Rfstart
NVG
LVG
Css
VBOOT
Cf
OUT
EN2
GND
EN1
Rfmin
Vs
C10
1,0uF
C12
560pF
C6
0,1uF
Q11
MMBT4403
R53
1K
NTC3
RS1
1K
IC4
PC123
RS33
1K
R51
10K
IC6
PC123
R22
100
ZD3
D4
D10
ZD1
J26
D1
C11
C36 2,2uF
R23
9,1K
1,0uF
R5
5,1K
R57
4,7K
QS4
RK7002
RS34
51K
CS15
RS15
27K
CS5
QS1
MMBT4401
R4
100
C5
R3
30
J15
T1
C16
0,022 1kV
T1
DS1
RS26
2,2
RS10
30K
CS1
ZDS4
AS358A
OP1
ICS1/1
RS24
270
CS9
DS4
CRS2
RS2 - RS5
27K
CS24
CS25
LS1
RS25 200
CS19
220µFx35V
+24V
1000µFx35V
RS10
130K
CS10
CS4
RS35
100
J25
AS358A
OP2
ICS1/2
J6
RS23
470
CS8
RS22
200
J23
DS5
CRS1
RS6, RS7, RS48, RS49
12K
CS23
CS27
LS2
Vcc_12V
J4
CS20
220µFx25V
820µFx25V
RS11
130K
CS11
CS7
RS19
20K
ZD3
ZDS2
DS3
RS8
1K
+5V_SB
ZDS1
DS2
+24V
RS38
4,7K
RS36
16K
R27
27K
IC5
PC123
C14
0,022uF
R26
34K
CS16
RS40
18,7K
RS37
10K
ICS4
EA1
RS41
9,1K
RS39
1,13K
EXT_PWM
BKLT_CNTL
Power_ON
CNS2
+24V
GND
5V_SB
GND
Vcc_12V
CNS1