MODEL　: PS-700
List No : 1703-00

PARTS LIST

Published:05/12/2017

CONTENTS

FRAME & MISCELLANEOUS COVER COMPONENTS (B) 1
MAIN SHAFT ASSY (B) 5
AIR BLOW & PRESSER COMPONENTS (B) 7
NEEDLE BAR & THREAD TAKE UP COMPONENTS (B) 11
THREAD TRIMMER COMPONENTS (B) 13
Y FEEDER COMPONENTS 15
X FEEDER COMPONENTS 17
HOOK SHAFT ASSY (B) 21
THREAD DETECT ASM 23
THREAD TENSION & NEEDLE COOLER ASM COMPONENTS 27
PEN STICK ASM (OPTIONAL PARTS) 31
PANEL SUPPORT COMPONENTS 33
OIL LUBRICATION COMPONENTS 35
TABLE COMPONENTS (1) 39
TABLE COMPONENTS (2) 45
THREAD STAND COMPONENTS 47
ACCESSORIE PARTS COMPONENTS 49
ELECTRIC COMPONENTS 53
PNEUMATIC COMPONENTS 55
HOW TO MAKE USE OF THIS PARTS LIST 57

FRAME & MISCELLANEOUS COVER COMPONENTS (B)

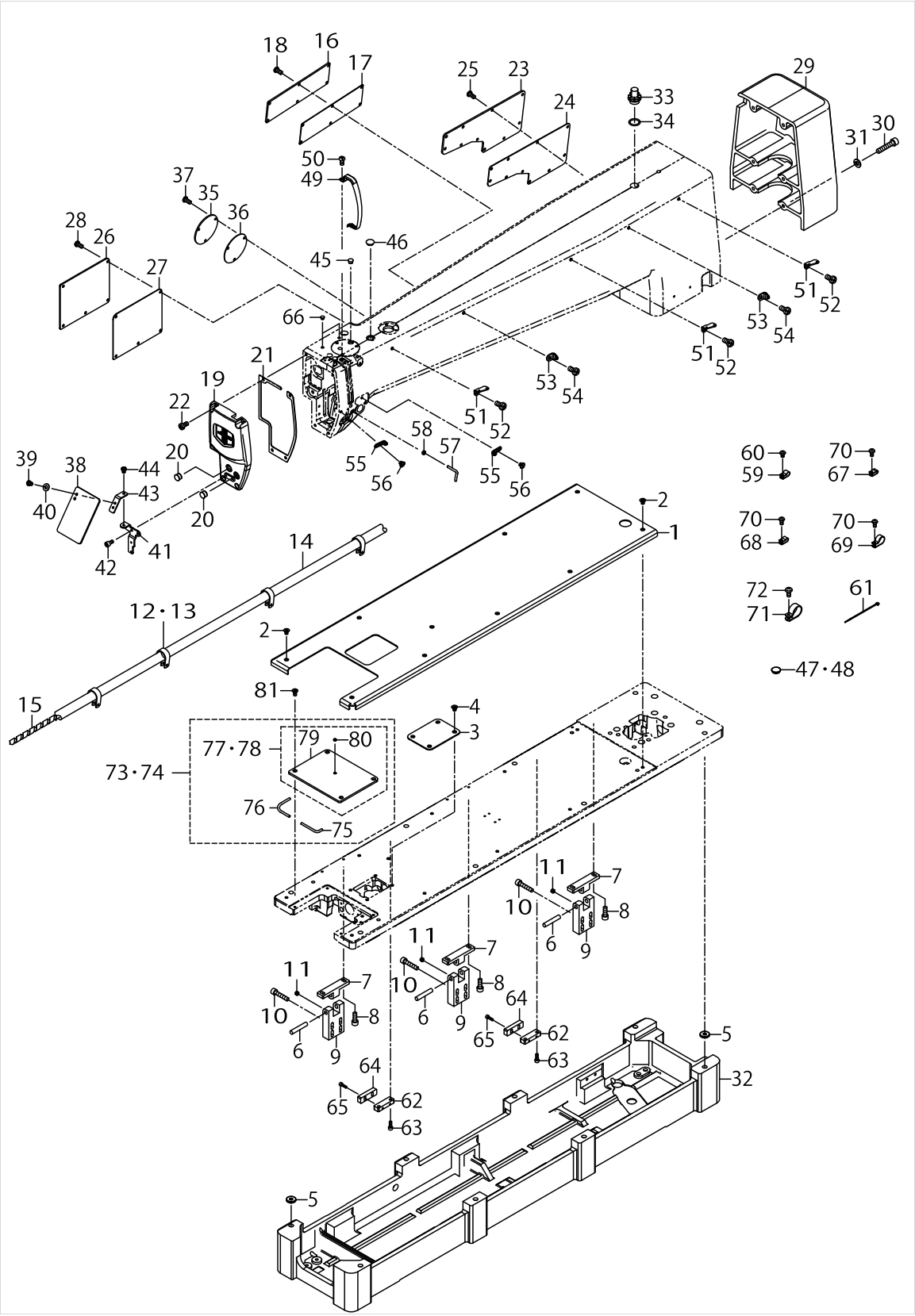

FRAME & MISCELLANEOUS COVER COMPONENTS (B)

No.	Supply Code	Parts No.	Replacement	Parts name	Remarks	Choice	Step	Level	Cons	Qty	Rep. QTY
1		40173928		BED_COVER						1	
2		–		–						10	
3		–		–						1	
4		–		–						4	
5		–		–						8	
6		–		–						3	
7		–		–						3	
8		–		–						6	
9		–		–						3	
10		–		–						12	
11		–		–						6	
12		HX00150000K		CABLE CLIP						4	
13		HX00150000M		CABLE CLAMP	OPTIONAL PARTS					4	
14		40173773		TUBE						1.55	
15		HX00314000A		SPIRAL TUBE						.82	
16		–		–						1	
17		40173574		SIDE_COVER_MIDDLE_PACKING						1	
18		–		–						6	
19		40173598		FACE_COVER						1	
20		–		–						2	
21		40173576		FACE_COVER_PACKING						1	
22		–		–						4	
23		–		–						1	
24		40173577		SIDE_COVER_REAR_PACKING						1	
25		40173758		SCREW						10	
26		40173938		SIDE_COVER_FRONT						1	
27		40173578		SIDE_COVER_FRONT_PACKING						1	
28		40173758		SCREW						5	
29		–		–						1	
30		–		–						6	
31		–		–						6	
32		40173941		OIL_TANK_LARGE						1	
33		–		–						1	
34		–		–						1	
35		40173988		SIDE_COVER_D						1	
36		40173946		SIDE_COVER_D_PACKING						1	
37		40173758		SCREW						3	
38		26037200		SAFETY PLATE						1	
39		SM4040601SC		SCREW M4X0.7 L=6						2	
40		WP0450801SC		WASHER 4.5X10X0.8						2	
41		40173579		BASE_PLATE						1	
42		SM6040802TP		SCREW M4X0.7 L=8						2	
43		40173580		LINK_PLATE						1	
44		SM4040555SP		SCREW						1	
45		TA0850604R0		RUBBER PLUG						1	
46		TA1250504R0		RUBBER PLUG						1	

FRAME & MISCELLANEOUS COVER COMPONENTS (B)

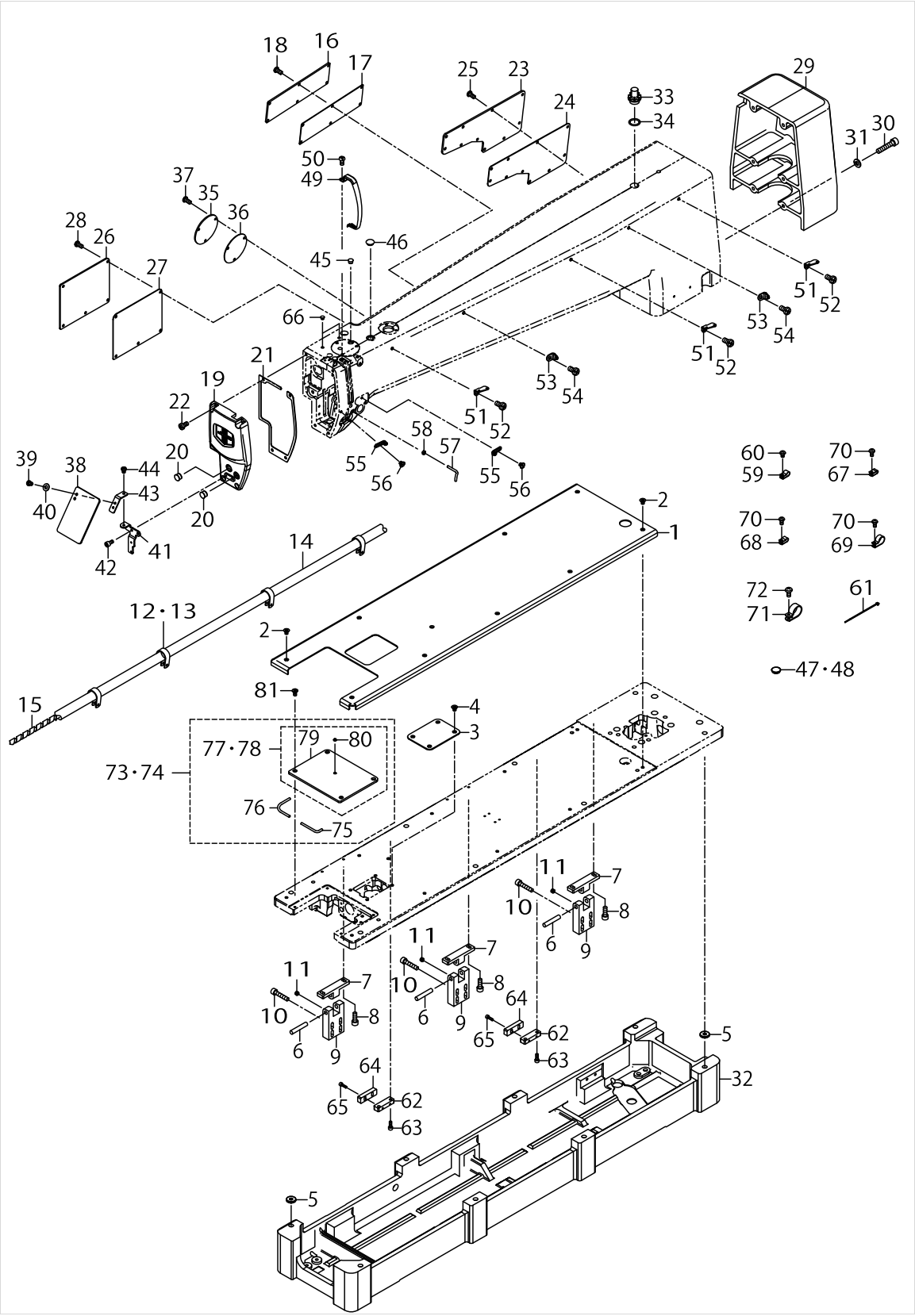

FRAME & MISCELLANEOUS COVER COMPONENTS (B)

No.	Supply Code	Parts No.	Replacement	Parts name	Remarks	Choice	Step	Level	Cons	Qty	Rep. QTY
47		–		–						1	
48		–		–						1	
49		–		–						1	
50		40173758		SCREW						1	
51		26211904		THREAD GUIDE PLATE						3	
52		–		–						3	
53		40010414		THREAD_GUIDE_NO.1						2	
54		–		–						2	
55		–		–						2	
56		–		–						2	
57		40025414		L_SHAPED_THREAD_GUIDE						1	
58		NM6040000SN		NUT M4 TYPE1						1	
59		HX00150000C		CABLE CLAMP						1	
60		SM4040655SP		SCREW M4 L=6						1	
61		EA9500B0100		CABLE BAND						4	
62		–		–						2	
63		–		–						4	
64		–		–						2	
65		–		–						4	
66		TA0620504R0		CAP						2	
67		HX00150000A		CABLE CLAMP						1	
68		HX00150000B		CABLE CLAMP						2	
69		HX00150000H		CABLE CLAMP						1	
70		SM4040855SP		SCREW						4	
71		HX00150000M		CABLE CLAMP						4	
72		SS4121015SP		SCREW 3/16-28 L=10						4	
73		40186575		NEEDLE_HOLE_GUIDE_ASSY_D16						1	
74		40186576		NEEDLE_HOLE_GUIDE_ASSY_D20	OPTIONAL PARTS					1	
75		40186578		O RING RIGHT				*		1	
76		40186579		O RING LEFT				*		1	
77		40174017		NEEDLE_HOLE_GUIDE_ASSY_D16				*		1	
78		40174016		NEEDLE_HOLE_GUIDE_ASSY_D20	OPTIONAL PARTS			*		1	
79		40173572		NEEDLE_HOLE_GUIDE_BASE				*		1	
80		40173582		NEEDLE_HOLE_GUIDE				*		1	
81		40173987		SCREW						4	

MAIN SHAFT ASSY (B)

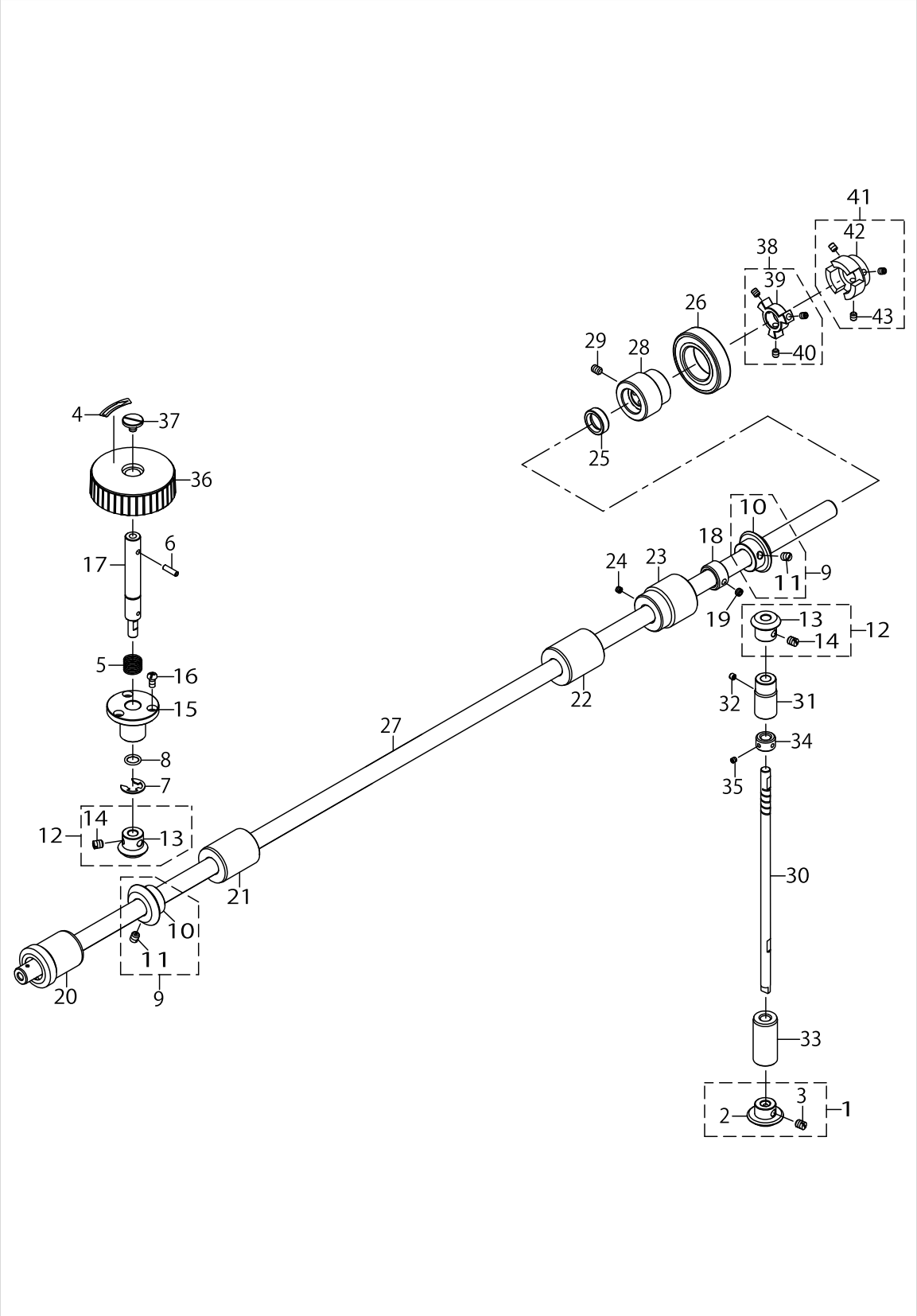

MAIN SHAFT ASSY (B)

No.	Supply Code	Parts No.	Replacement	Parts name	Remarks	Choice	Step	Level	Cons	Qty	Rep. QTY
1		40090004		LOWER LARGE BEVEL GEAR ASM.						1	
2		40090008		LOWER LARGE BEVEL GEAR				*		1	
3		SS8660810TP		SCREW 1/4-40 L=8				*		2	
4		CM500200001		ROTATE DIRECTION LABEL						1	
5		GAF01007000		SPRING						1	
6		PS0400142KH		SPRING PIN 4X14						1	
7		RE1000000K0		E-RING 10						1	
8		RO098190100		O-RING						1	
9		40090002		UPPER LARGE BEVEL GEAR ASM.						2	
10		40090006		UPPER LARGE BEVEL GEAR				*		1	
11		SS8660810TP		SCREW 1/4-40 L=8				*		2	
12		40090003		UPPER SMALL BEVEL GEAR ASM.						2	
13		40090007		UPPER SMALL BEVEL GEAR				*		1	
14		SS8660810TP		SCREW 1/4-40 L=8				*		2	
15		40174020		PULLEY_SPRING_PLATE						1	
16		40173758		SCREW						3	
17		40173759		PULLEY_SHAFT						1	
18		–		–						1	
19		–		–						2	
20		40173590		MAIN_SHAFT_FRONT_BUSHING						1	
21		40173556		MAIN_SHAFT_MIDDLE_BUSHING_A						1	
22		40173557		MAIN_SHAFT_MIDDLE_BUSHING_B						1	
23		–		–						1	
24		–		–						1	
25		40086740		MIAN_SHAFT_OIL_SEAL						1	
26		SB130000600		BEARING						1	
27		–		–						1	
28		40173643		MAIN_SHAFT_BEARING_BUSH						1	
29		SM8060812TP		SCREW M6 L=8						2	
30		–		–						1	
31		22905103		UPRIGHT SHAFT BUSHING						1	
32		–		–						1	
33		40173591		VERTICAL_SHAFT_BUSHING_LOW						1	
34		–		–						1	
35		–		–						2	
36		B1212210D00		PULLEY						1	
37		A1230500000A		HANDWHEEL SETSCREW						1	
38		–		–						1	
39		40173756		COUPLING_A				*		1	
40		40173734		THREAD_TENSION_SHAFT				*		3	
41		40173632		COUPLING_A_ASSY						1	
42		40173633		COUPLING_A				*		1	
43		40173734		THREAD_TENSION_SHAFT				*		3	

AIR BLOW & PRESSER COMPONENTS (B)

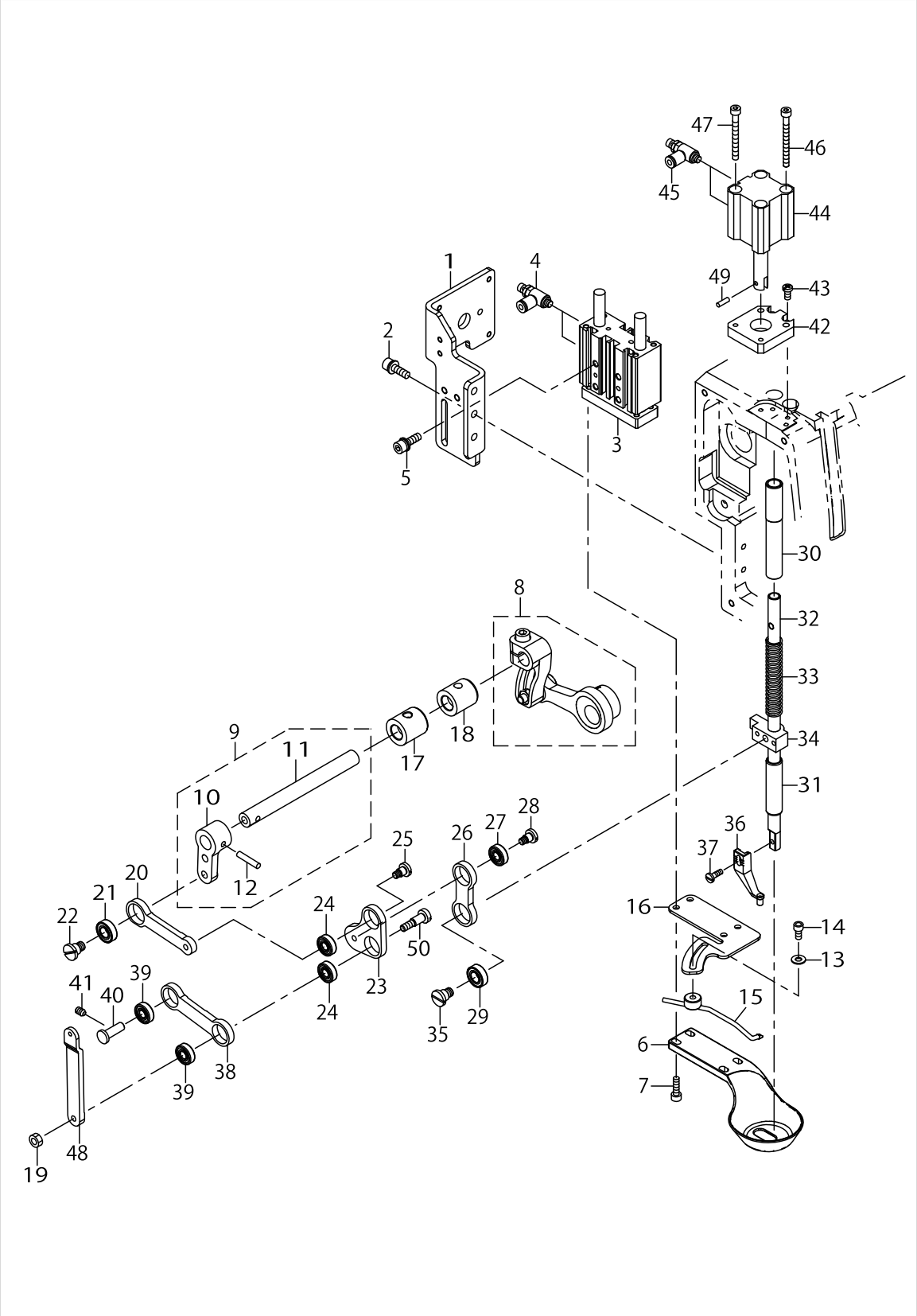

AIR BLOW & PRESSER COMPONENTS (B)

No.	Supply Code	Parts No.	Replacement	Parts name	Remarks	Choice	Step	Level	Cons	Qty	Rep. QTY
1		40173565		PRESSER_CYLINDER_PLATE						1	
2		–		–						3	
3		40174025		BOAT_PRESSER_CYLINDER						1	
4		–		–						2	
5		–		–						3	
6		40173797		BOAT_PRESSER						1	
7		–		–						4	
8		–		–						1	
9		40173803		PRESSER SHAFT_LINK_ASSY						1	
10		40173805		LINK				*		1	
11		40173804		PRESSER SHAFT				*		1	
12		40173806		PIN				*		1	
13		WP0450801SC		WASHER 4.5X10X0.8						1	
14		SM6040802TP		SCREW M4X0.7 L=8						1	
15		40173754		THREAD_BLOW_ASM						1	
16		40173553		THREAD_BLOW_PLATE						1	
17		40173595		PRESSER_FRONT_BUSHING						1	
18		40173596		PRESSER_REAR_BUSHING						1	
19		–		–						1	
20		40173807		PRESSER_CONNECTING_LINK_A						1	
21		–		–						1	
22		–		–						1	
23		–		–						1	
24		–		–						2	
25		–		–						1	
26		–		–						1	
27		–		–						1	
28		–		–						1	
29		–		–						1	
30		40173566		PRESSER_BAR_UPPER_BUSHING						1	
31		40078133		PRESSER_BUSHING						1	
32		40173814		PRESSER_BAR						1	
33		40173815		PRESSER_BAR_SPRING						1	
34		–		–						1	
35		–		–						1	
36		B1601210D0BA		INTERMEDIATE PRESSER B						1	
37		–		–						1	
38		–		–						1	
39		–		–						2	
40		–		–						1	
41		–		–						1	
42		–		–						1	
43		–		–						2	
44		40173821		PRESSER_CYLINDER						1	
45		–		–						2	
46		–		–						2	

AIR BLOW & PRESSER COMPONENTS (B)

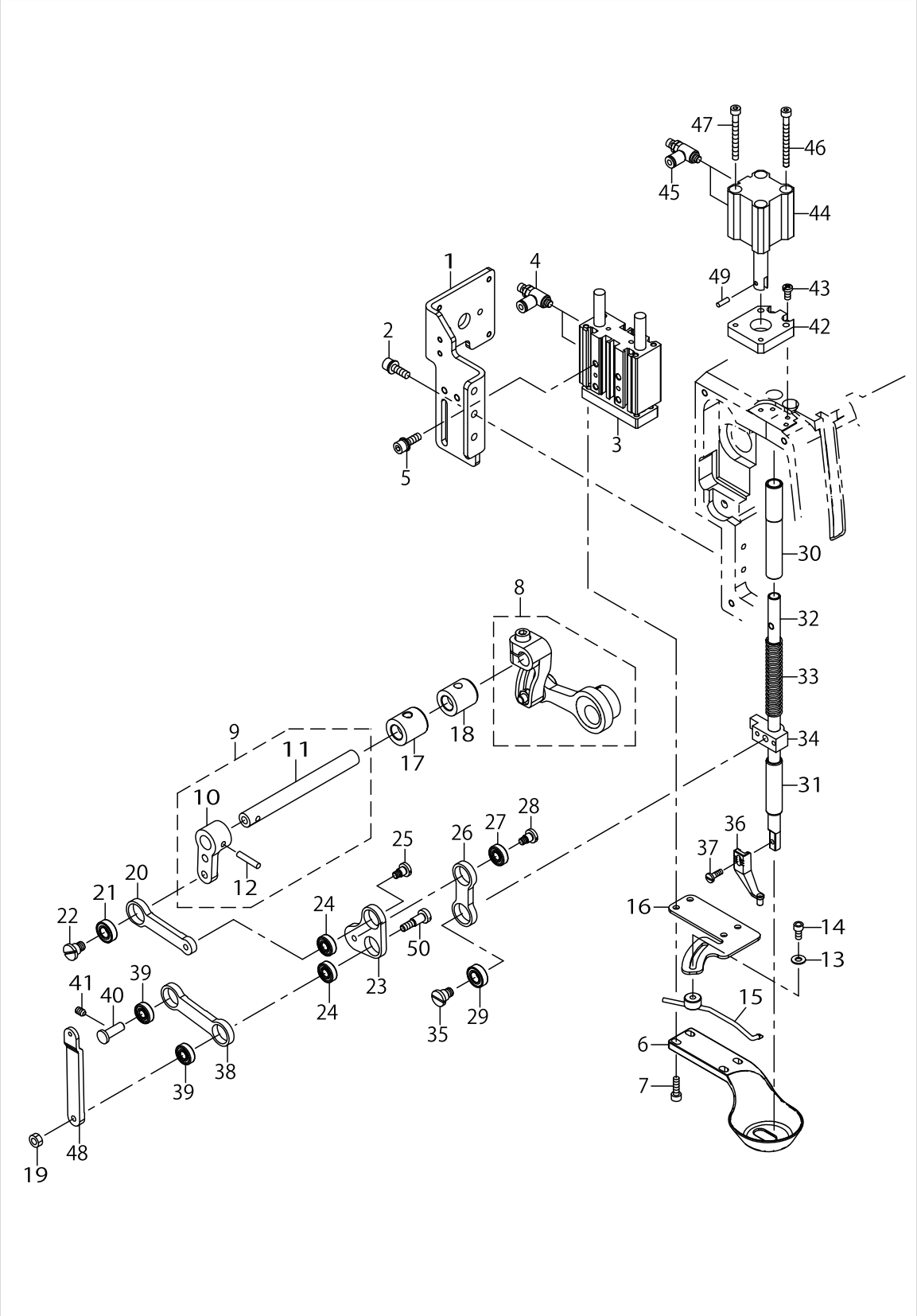

AIR BLOW & PRESSER COMPONENTS (B)

No.	Supply Code	Parts No.	Replacement	Parts name	Remarks	Choice	Step	Level	Cons	Qty	Rep. QTY
47		–		–						2	
48		–		–						1	
49		–		–						1	
50		–		–						1	

NEEDLE BAR & THREAD TAKE UP COMPONENTS (B)

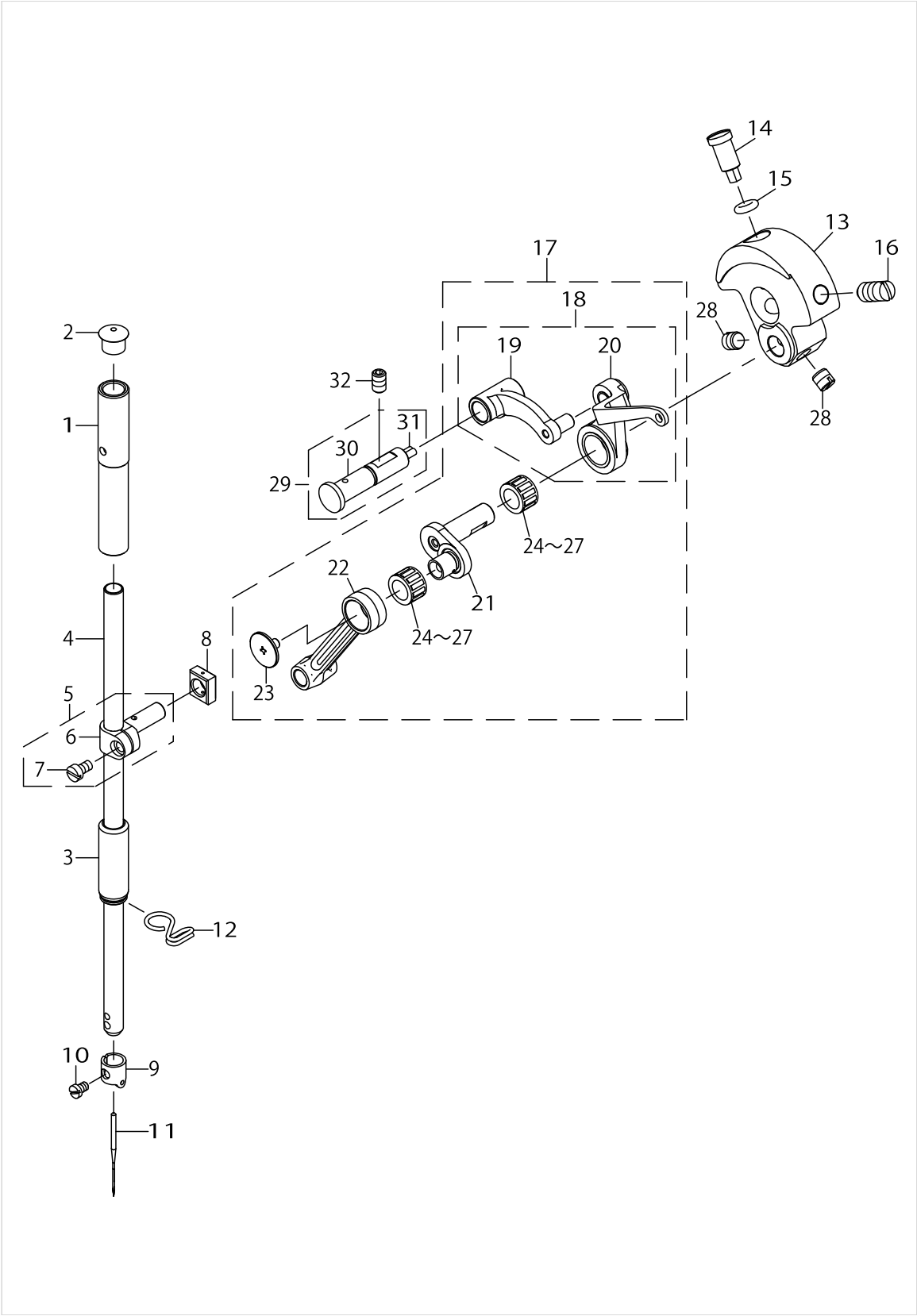

NEEDLE BAR & THREAD TAKE UP COMPONENTS (B)

No.	Supply Code	Parts No.	Replacement	Parts name	Remarks	Choice	Step	Level	Cons	Qty	Rep. QTY
1		22906101		NEEDLE BAR BUSHING						1	
2		22901409		NEEDLE BAR UPPER BUSH CAP						1	
3		40173592		NEEDLE_BAR_LOWER_BUSHING						1	
4		40173776		NEEDLE_BAR						1	
5		–		–						1	
6		40173778		NEEDLE_BAR_CONNECTING				*		1	
7		–		–				*		1	
8		40173779		SLIDE_BLOCK						1	
9		40173780		NEEDLE_BAR_THREAD_GUIDE						1	
10		–		–						1	
11		MDB1SFB0902		NEEDLE DBX1SF #9-2						1	
12		40023223		NEEDLE BAR THREAD GUIDE						1	
13		40173781		COUNTER_WEIGHT						1	
14		–		–						1	
15		RO044240100		O-RING						1	
16		–		–						1	
17		40173782		THREAD_TAKE_UP_FULL						1	
18		40173783		THREAD_TAKE_UP_ASSY				*		1	
19		40173784		THREAD_TAKE_UP_CRANK				*		1	
20		11403953		THREAD_TAKE_UP_COMPL.				*		1	
21		40173559		NEEDLE_BAR_CRANK				*		1	
22		40173785		NEEDLE_BAR_CRANK_ROD				*		1	
23	R	22918304	B1903552000	LEFT SCREW				*		1	1.00
24		22918403		BEARING A	SELECTIVE PARTS			*		2	
25		22918502		BEARING B	SELECTIVE PARTS			*		2	
26		22918601		BEARING C	SELECTIVE PARTS			*		2	
27		22918700		BEARING D	SELECTIVE PARTS			*		2	
28		–		–						2	
29		11017357		THREAD TAKE-UP CRANK SHAFT ASM						1	
30		11017209		THREAD TAKE-UP CRANK SHAFT				*		1	
31		CQ250000001		COTTON OIL WICK D=2.5				*		0.-055	
32		–		–						1	

THREAD TRIMMER COMPONENTS (B)

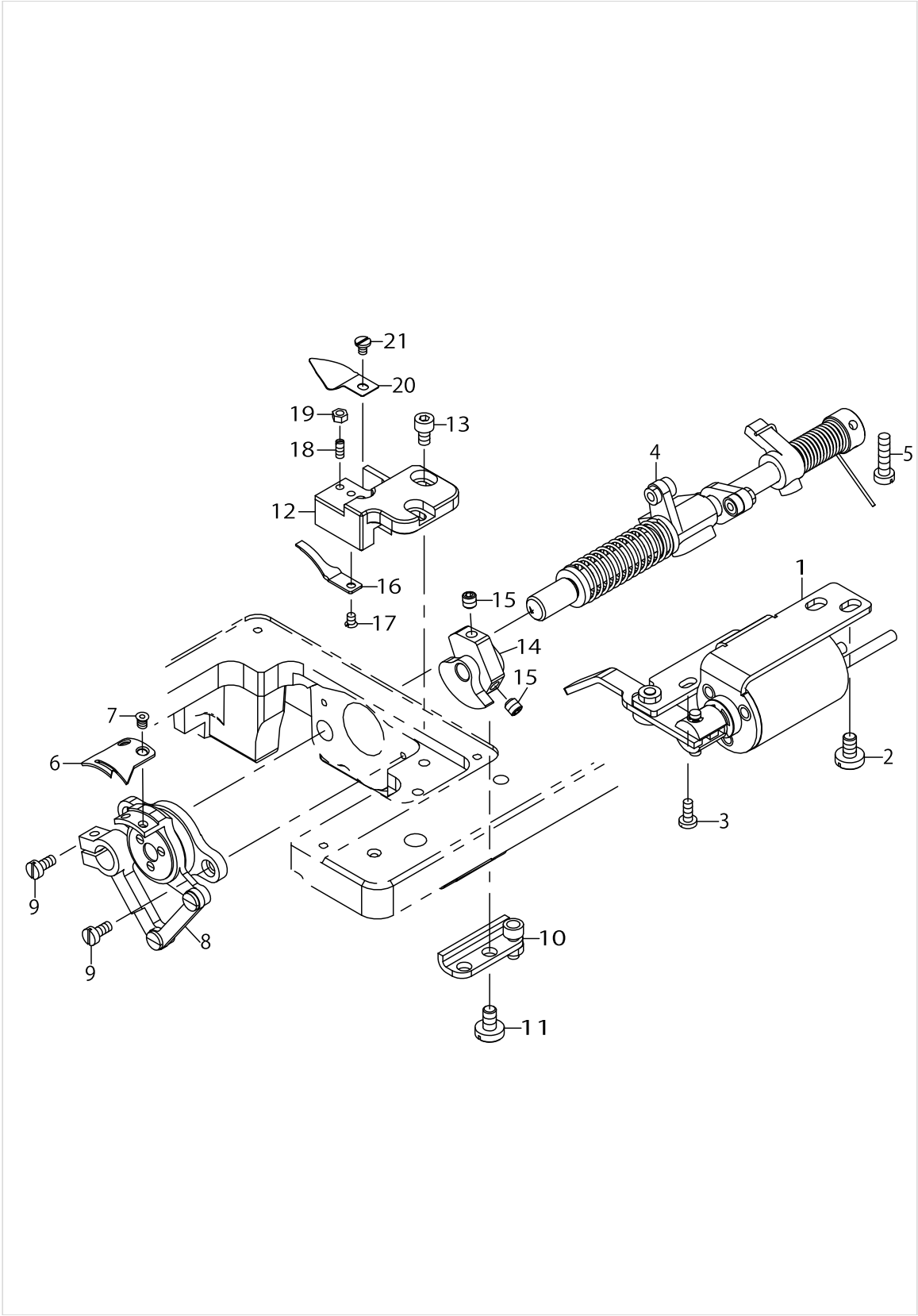

THREAD TRIMMER COMPONENTS (B)

No.	Supply Code	Parts No.	Replacement	Parts name	Remarks	Choice	Step	Level	Cons	Qty	Rep. QTY
1		40173631		THREAD_TRIMMER_SOLENOID_ASM						1	
2		–		–						2	
3		–		–						1	
4		40174028		THREAD_TRIMMER_ASM						1	
5		40174035		MOVING_KNIFE_RETURN_SCREW						1	
6		40173746		MOVING_KNIFE						1	
7		–		–						2	
8		40173854		MOVING_KNIFE_BASE						1	
9		–		–						2	
10		40173568		FIXED_KNIFE_BASE						1	
11		–		–						2	
12		–		–						1	
13		–		–						2	
14		40173857		MOVING_KNIFE_CAM						1	
15		–		–						2	
16		40173747		FIXED_KNIFE						1	
17		–		–						1	
18		–		–						1	
19		–		–						1	
20		40173792		THREAD_DIVIDE_PLATE						1	
21		–		–						1	

Y FEEDER COMPONENTS

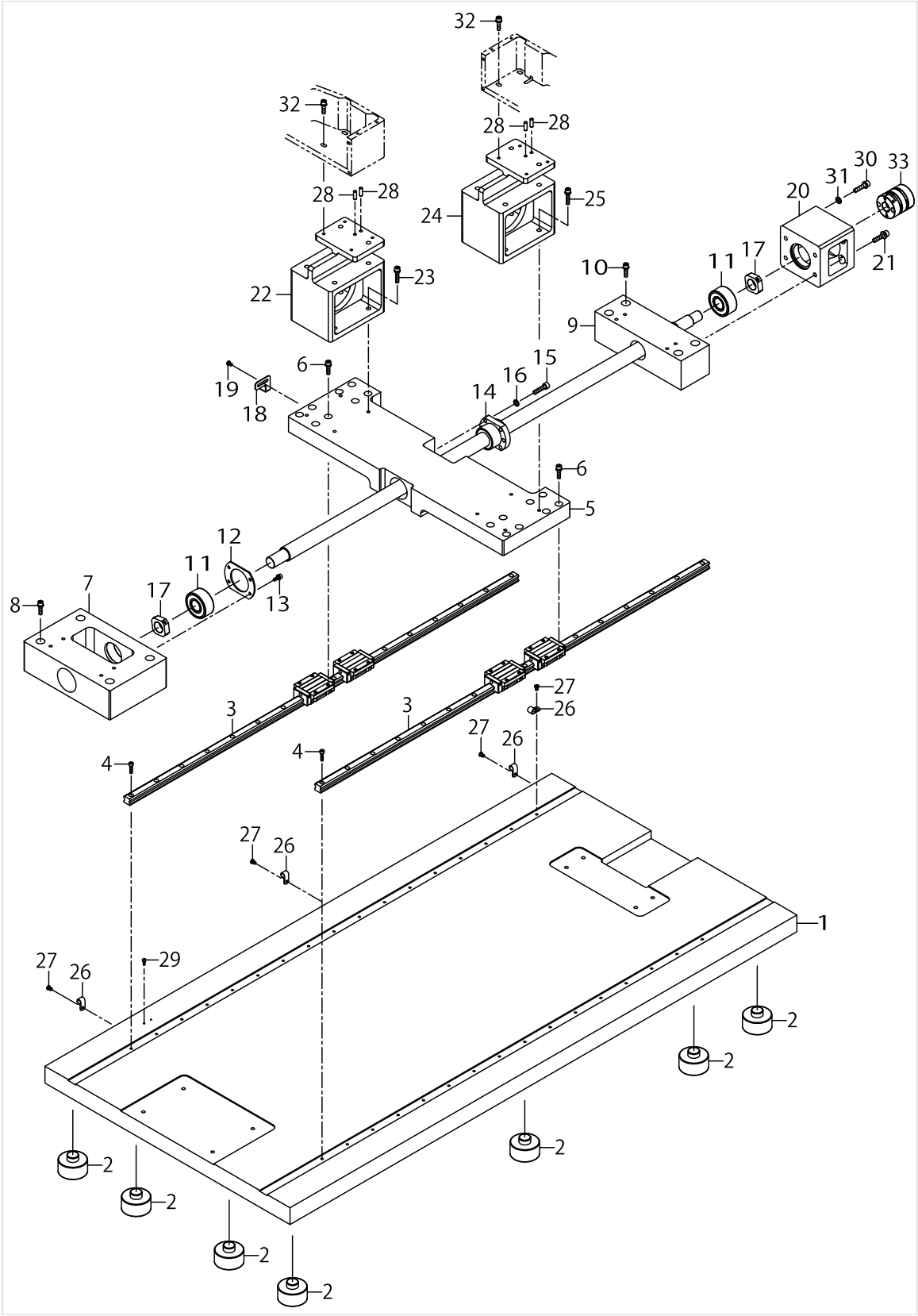

Y FEEDER COMPONENTS

No.	Supply Code	Parts No.	Replacement	Parts name	Remarks	Choice	Step	Level	Cons	Qty	Rep. QTY
1		40173817		Y_FEEDER_BED						1	
2		–		–						12	
3		40173829		Y_FEEDER_LM_GUIDE						2	
4		–		–						32	
5		40173830		Y_FEEDER_BASE						1	
6		–		–						16	
7		40173831		Y_BALL_SCREW_BASE_A						1	
8		SL6062592TN		SCREW						4	
9		40173832		Y_BALL_SCREW_BASE_B						1	
10		SL6062592TN		SCREW						4	
11		40173833		Y_BEARING						2	
12		40173567		Y_BEARING_STOPPER						1	
13		–		–						4	
14		40173834		Y_BALL_SCREW						1	
15		–		–						6	
16		–		–						6	
17		40173835		Y_FEEDER_BALL_SCREW_NUT						2	
18		–		–						1	
19		–		–						2	
20		40173837		Y_FEEDER_MOTOR_BASE						1	
21		–		–						4	
22		–		–						1	
23		–		–						4	
24		–		–						1	
25		–		–						4	
26		40173728		CABLE_CLAMP						4	
27		–		–						4	
28		–		–						4	
29		SM6030802TP		SCREW M3X0.5 L=8						1	
30		SL6062542TN		SCREW						4	
31		WP0641600SC		WASHEW6.4X12.5X1.6						4	
32		SL6052092TN		SCREW						8	
33		40173838		Y_FEEDER_COUPLING						1	

X FEEDER COMPONENTS

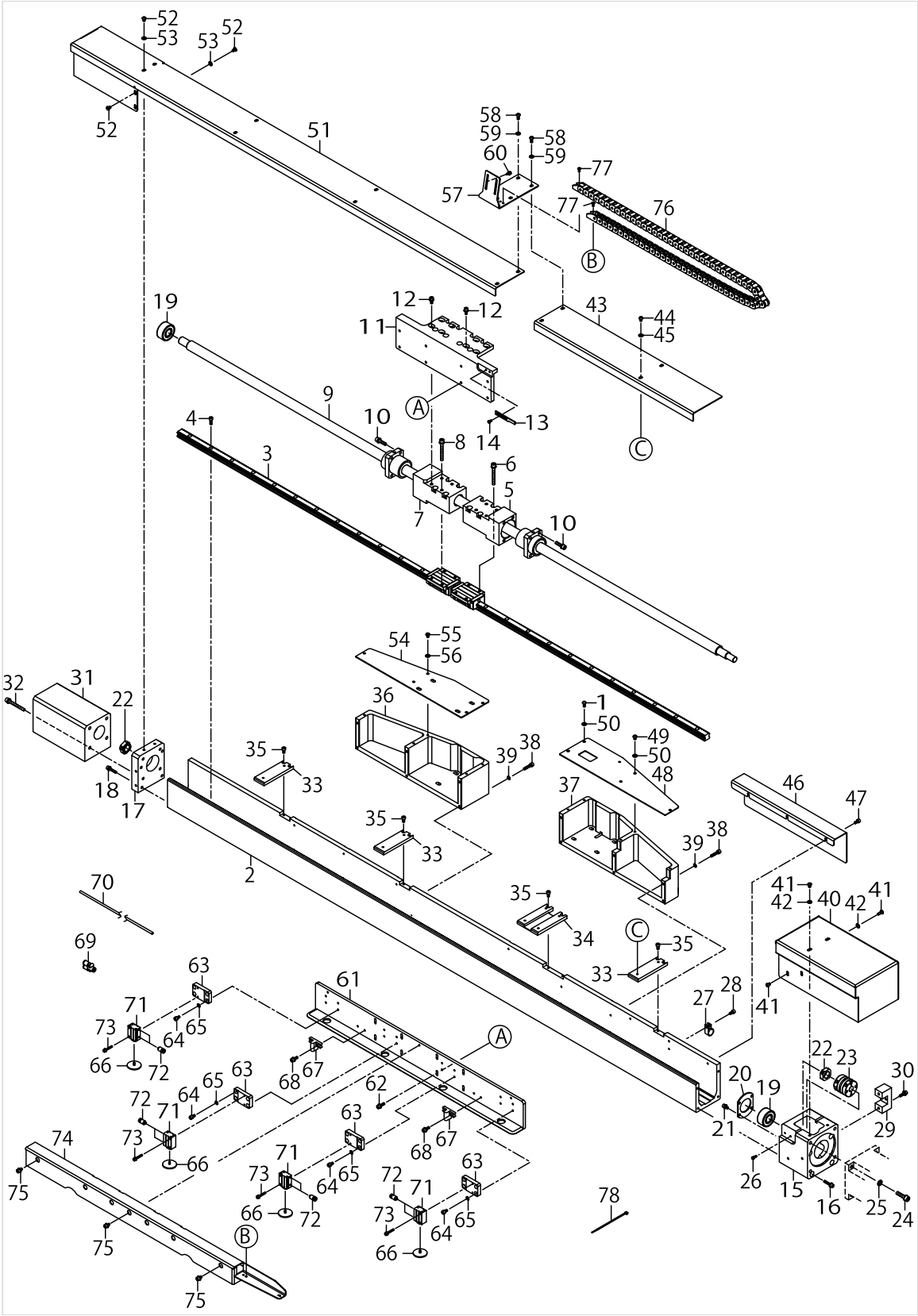

X FEEDER COMPONENTS

No.	Supply Code	Parts No.	Replacement	Parts name	Remarks	Choice	Step	Level	Cons	Qty	Rep. QTY
1		SM3041052TN		SCREW M4 L=10						1	
2		40173645		X_FEEDER_BED						1	
3		40173646		X_LM_GUIDE						1	
4		SM6041202TP		SCREW M4X0.7 L=12						25	
5		40173647		X_FEEDER_NUT_BRACKET_R						1	
6		SL6054592TN		SCREW M5 L=45						4	
7		40173648		X_FEEDER_NUT_BRACKET_L						1	
8		SL6054592TN		SCREW M5 L=45						4	
9		40173649		X_BALL_SCREW						1	
10		SL6052092TN		SCREW M5 L=20						8	
11		40173650		CLAMP_BRACKET						1	
12		SL6041092TN		SCREW M4 L=10						8	
13		40173651		X_FEEDER_SENSOR_PLATE						1	
14		SM6030650TP		SCREW						2	
15		40173652		X_FEEDER_MOTOR_BASE						1	
16		SL6042092TN		SCREW M4 L=20						4	
17		40173653		WEIGHTED_BRACKET						1	
18		SL6042092TN		SCREW M4 L=20						4	
19		40173564		X_BEARING						2	
20		40173541		X_BEARING_STOPPER						1	
21		SL6040892TN		SCREW M4 L=8						4	
22		40173659		X_FEEDER_BALL_SCREW_NUT						2	
23		40173660		X_FEEDER_COUPLING						1	
24		SL6062542TN		SCREW M6 L=25						4	
25		WP0641600SC		WASHEW6.4X12.5X1.6						4	
26		SM6030802TP		SCREW M3X0.5 L=8						1	
27		HX00150000F		CABLE CLAMP						1	
28		SM6040802TP		SCREW M4X0.7 L=8						1	
29		40173661		MOTOR_COVER_BLOCK						1	
30		SL6031492TN		SCREW M3 L=14						2	
31		40173584		BALANCE_WEIGHTED						1	
32		SL6054592TN		SCREW M5 L=45						4	
33		40173725		COVER_BREAKET_B						3	
34		40173663		COVER_BREAKET_A						1	
35		SM6040802TP		SCREW M4X0.7 L=8						8	
36		40173664		X_FEEDER_SUPPORT_BRACKET_L						1	
37		40173665		X_FEEDER_SUPPORT_BRACKET_R						1	
38		SL6042042TN		SCREW M4 L=20						12	
39		WP0460556SD		WASHER 4.6X7.5X0.5						12	
40		40173667		MOTOR_COVER_2						1	
41		SM3040652TN		SCREW M4 L=6						6	
42		WP0430801SC		WASHER M4						4	
43		40173669		MOTOR_COVER_1						1	
44		SM3040652TN		SCREW M4 L=6						2	
45		WP0430801SC		WASHER M4						2	
46		40173671		CABLE_COVER						1	

X FEEDER COMPONENTS

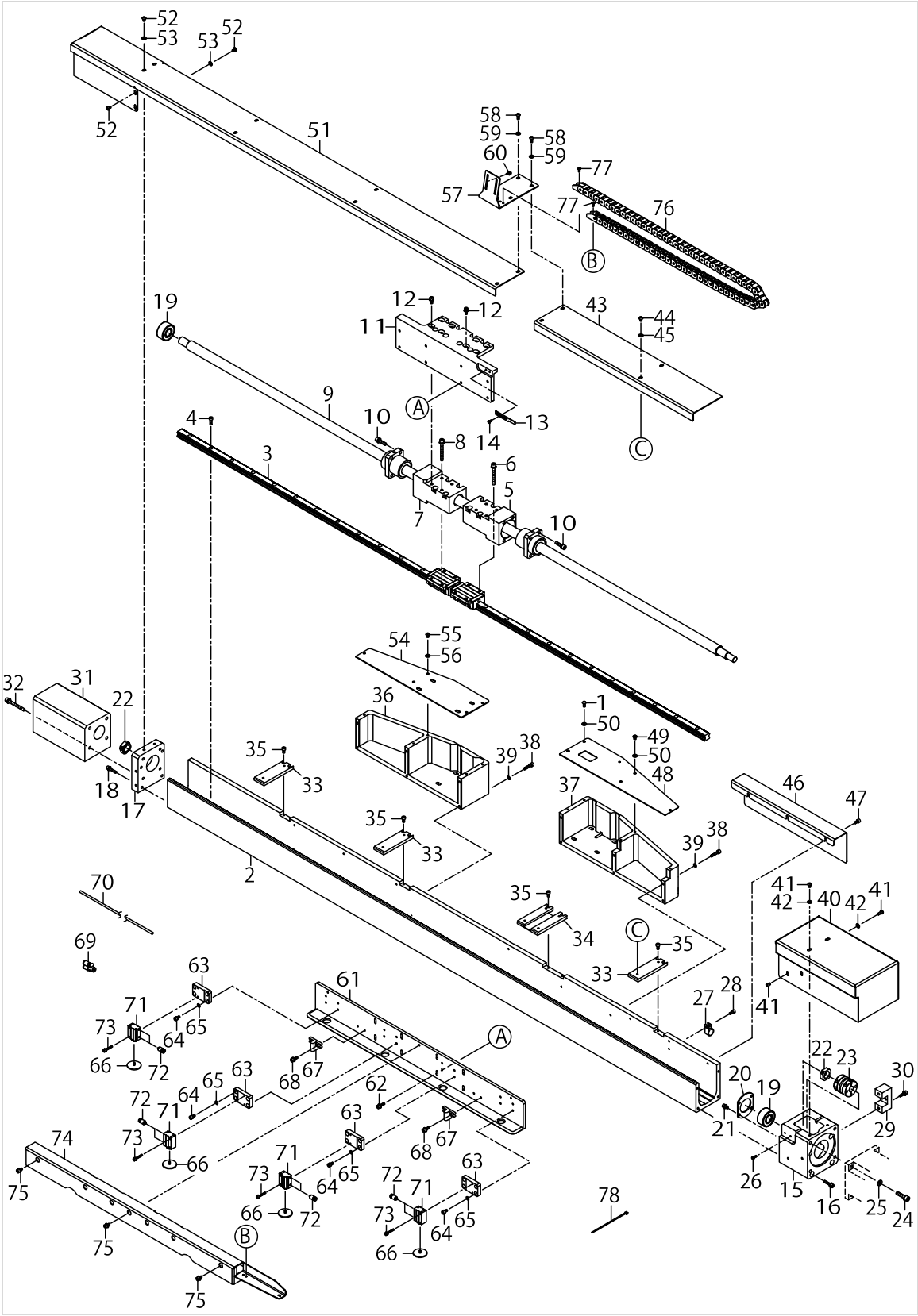

X FEEDER COMPONENTS

No.	Supply Code	Parts No.	Replacement	Parts name	Remarks	Choice	Step	Level	Cons	Qty	Rep. QTY
47		SM6040802TP		SCREW M4X0.7 L=8						3	
48		40173672		X_FEEDER_BRACKET_COVER_R						1	
49		SM3040652TN		SCREW M4 L=6						5	
50		WP0430801SC		WASHER M4						6	
51		40173674		WEIGHTED_COVER_BLK						1	
52		SM3040652TN		SCREW M4 L=6						10	
53		WP0430801SC		WASHER M4						8	
54		40173675		X_FEEDER_BRACKET_COVER_L						1	
55		SM3040652TN		SCREW M4 L=6						5	
56		WP0430801SC		WASHER M4						5	
57		40173676		BARCODE_READER_PLATE						1	
58		SM3041052TN		SCREW M4 L=10						4	
59		WP0430801SC		WASHER M4						4	
60		SL6030892TN		SCREW M3 L=8						2	
61		40173677		CLAMP_BASE						1	
62		SL6041492TN		SCREW M4 L=14						8	
63		40173678		CLAMP_CYLINDER_BLOCK						4	
64		SL6040842TN		SCREW M4 L=8						16	
65		WP0460556SD		WASHER 4.6X7.5X0.5						16	
66		40173679		CLAMP						4	
67		40173680		PATTEN_GUIDE						2	
68		SL6041292TN		SCREW M4 L=12						4	
69		PJ308040006		UNION Y						6	
70		BT0400251EB		URETHANE TUBE BLACK 4X2.5						4	
71		PA100153500		AIR CYLINDER						4	
72		PJ301040302		HALF UNION						8	
73		SL6032092TN		SCREW M3 L=20						8	
74		40173683		CLAMP_COVER_ASSY						1	
75		SL6040892TN		SCREW M4 L=8						3	
76		40173684		TABLE_CAREER_LINK_X						1	
77		SM1030800SM		SCREW M3X0.5 L=8						4	
78		EA9500B0100		CABLE BAND						3	

HOOK SHAFT ASSY (B)

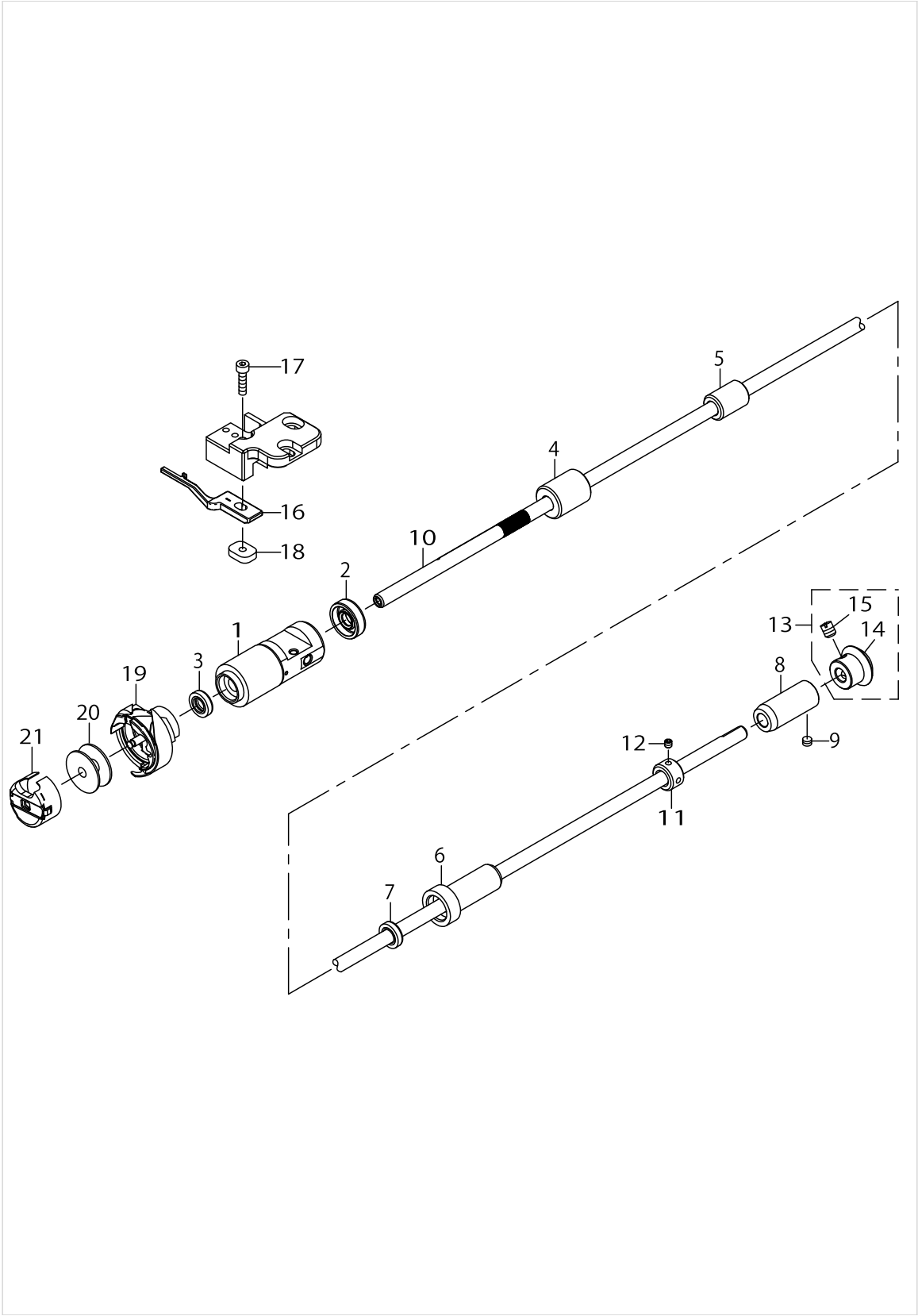

HOOK SHAFT ASSY (B)

No.	Supply Code	Parts No.	Replacement	Parts name	Remarks	Choice	Step	Level	Cons	Qty	Rep. QTY
1		40173560		LOWER_SHAFT_FRONT_BUSHING						1	
2		40145927		OIL SEAL						1	
3		40010805		OIL SEAL RING						1	
4		40173561		LOWER_SHAFT_MID-DLE_BUSHING_A						1	
5		40173563		LOWER_SHAFT_MID-DLE_BUSHING_B						1	
6		40173593		LOWER_SHAFT_MID-DLE_BUSHING_C						1	
7		40010805		OIL SEAL RING						1	
8		22916308		HOOK DRIVING SHAFT BUSH						1	
9		–		–						1	
10		–		–						1	
11		40173644		VERTICA_SHAFT_COLLER						1	
12		–		–						2	
13		40090005		LOWER SMALL BEVEL GEAR ASM.						1	
14		40090009		LOWER SMALL BEVEL GEAR				*		1	
15		SS8660810TP		SCREW 1/4-40 L=8				*		2	
16		40173790		INNER HOOK HOLDER						1	
17		–		–						1	
18		40173791		ADJUST_NUT						1	
19		D1830560EA0		HOOK ASM.						1	
20		40173635		BOBBIN						1	
21		B1837201SA0		BOBBIN CASE ASM.						1	

THREAD DETECT ASM

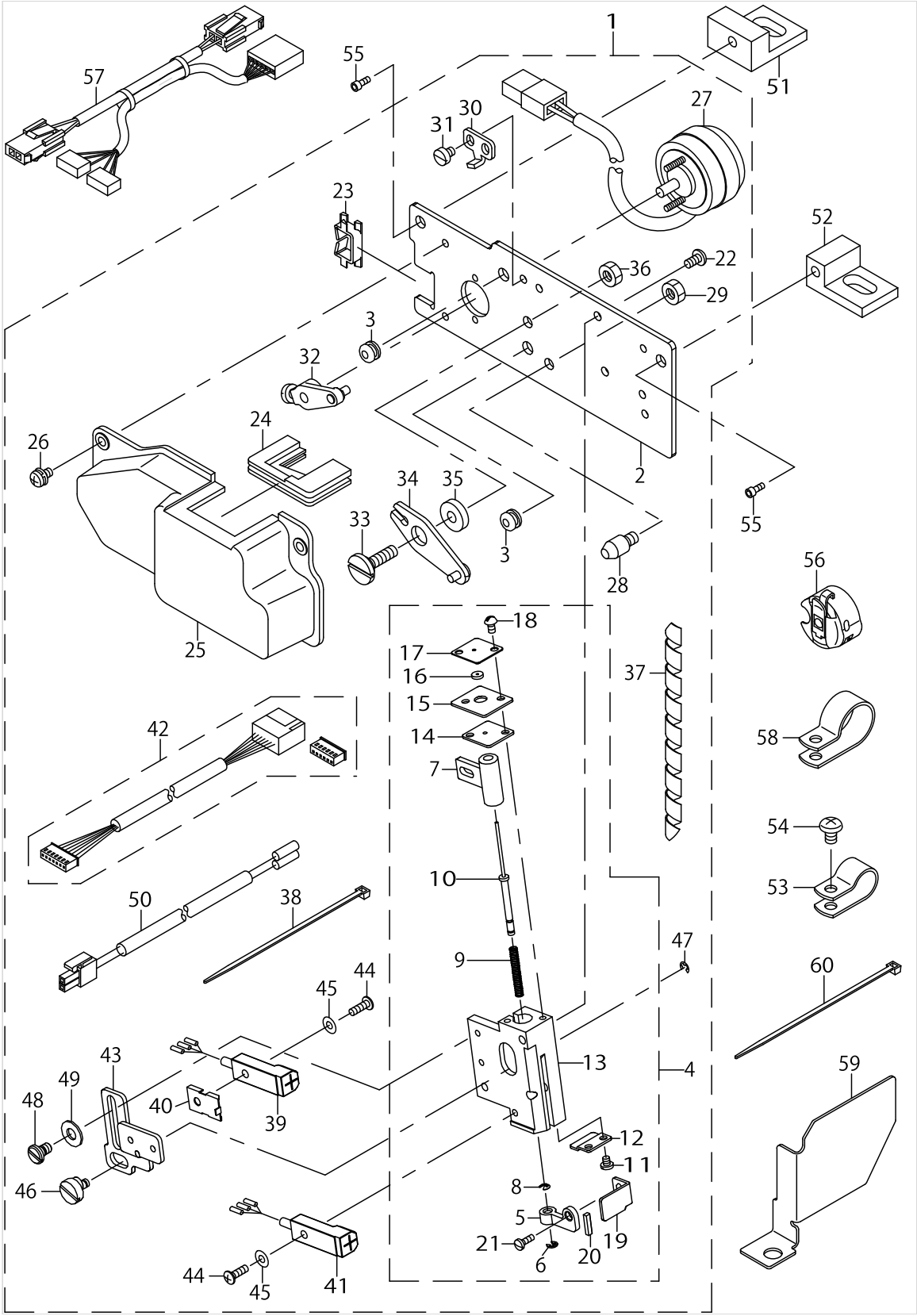

THREAD DETECT ASM

No.	Supply Code	Parts No.	Replacement	Parts name	Remarks	Choice	Step	Level	Cons	Qty	Rep. QTY
1		40088226		DRIVE_DEVICE_ASSY						1	
2		40088225		BASE_PLATE				*		1	
3		40088228		CODE_BUSH				*		2	
4		40088229		GUIDER_ASSY				*		1	
5		GAE03023000		MAGNET PLATE				*		1	
6		RE0150000K0		SNAP RING 1.5				*		1	
7		GAE03021000		DETECTING ROD HOLDER				*		1	
8		GAE03025000		E RING				*		1	
9		GAE03022000		DETECTING ROD SPRING				*		1	
10		GAE03020000		DETECTING ROD				*		1	
11		SS7060310SP		SCREW 3/32-56 L=3				*		2	
12		40090419		DETECTING_ROD_STOPPER				*		1	
13		40090415		GUIDER(SUNX)				*		1	
14		GAE04027000		DETECTING ROD GUIDE PLATE				*		1	
15		GAE04019000		DETECTING ROD FELT GUIDE				*		1	
16		GAE03028000		DETECTING ROD FELT				*		1	
17		GAE04029000		DETECTING ROD COVER				*		1	
18		SS3060410SP		SCREW 3/32-56 L=4				*		2	
19		40090417		L_CHECKER				*		1	
20		40090418		SPACER				*		1	
21		SS7060610SP		SCREW 3/32-56 L=5.5				*		1	
22		SS4080620TP		SCREW 1/8-44 L=6				*		2	
23		HX00285000A		EDGE SADDLE				*		1	
24		GAE04039000		RUBBER CUSHION				*		1	
25		GAE04038000		DRIVING EQUIPMENT COVER				*		1	
26		SL4030681SC		SCREW M3 L=6				*		3	
27		40084091		ROTARY SOLENOID ASSY				*		1	
28	R	B1157781000	40008996	GUIDE PIN				*		1	1.00
29		NS6110420SP		HEXAGONAL NUT 11/64-40				*		1	
30		GAE03018000		DRIVING LINK STOPPER A				*		1	
31		SS6080410SP		SCREW 1/8-44 L=4				*		2	
32	D	GAE030120A0		SOLENOID ARM ASM.				*		1	
33		SD0790204SP		SHOULDER SCREW D=7.94 H=2				*		1	
34	D	GAE040140A0		DRIVING LINK ASM.				*		1	
35		MAO91003000		BSW PRESSER PLATE WASHER				*		1	
36		NS6110420SP		HEXAGONAL NUT 11/64-40				*		1	
37		HX001890000		SPIRAL TUBE				*		0.1	
38		EA9500B0100		CABLE BAND				*		1	
39		40090489		PROXIMITY SENSOR ASSY				*		1	
40		40091147		SENSOR_BRCKET				*		1	
41		40090488		PROXIMITY SENSOR ASSY				*		1	
42		40084059		LOWER THREAD SE-NSOR CORD ASSY				*		1	
43		40090416		SENSOR_ADJUSTING_BRACKET				*		1	
44		SM0850801SC		SCREW M2.5 L=8				*		2	
45		WP0280501SC		WASHER M2.6				*		2	
46		GAE03032000		ECCENTRIC PIN				*		1	

THREAD DETECT ASM

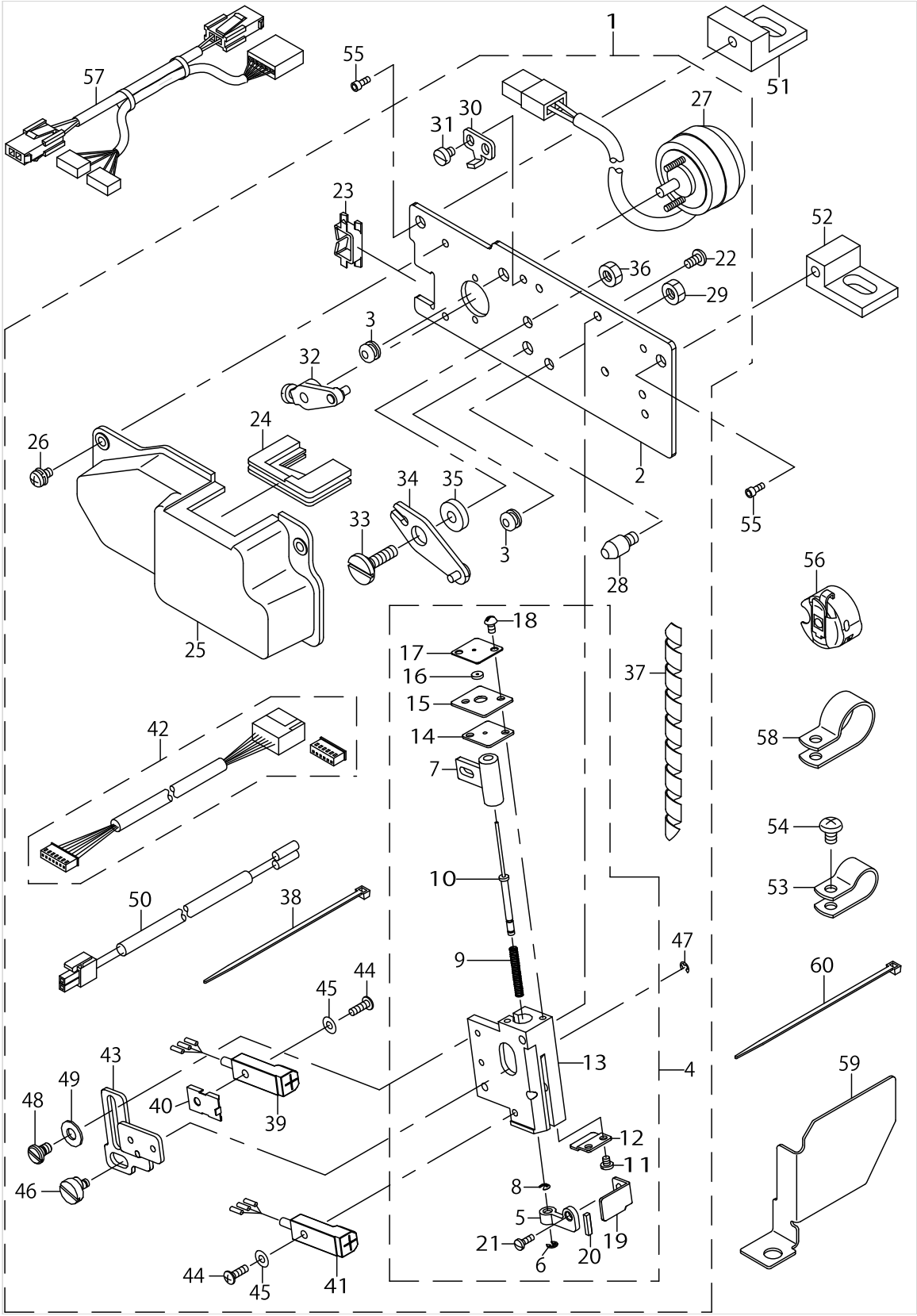

THREAD DETECT ASM

No.	Supply Code	Parts No.	Replacement	Parts name	Remarks	Choice	Step	Level	Cons	Qty	Rep. QTY
47		RE0200000K0		E-RING 2				*		1	
48		SD0400201SD		SHOULDER SCREW D=4 H=2				*		2	
49		WP0450801SC		WASHER 4.5X10X0.8				*		2	
50		40091087		SOLENOID EXTENSI-ON CORD ASSY				*		1	
51		40174032		STATOR_LEFT						1	
52		40174033		STATOR_RIGHT						1	
53		HX00150000D		CABLE CLIP						1	
54		SM4040655SP		SCREW M4 L=6						1	
55		SM6041002TP		SCREW M4X0.7 L=10						2	
56		GAE030460A0		BOBBIN CASE						1	
57		40173772		THREAD_AMOUNT_RELAY_CABLE						1	
58		HX00150000H		CABLE CLAMP						3	
59		40186485		OIL BAFFLE PLATE						1	
60		EA9500B0100		CABLE BAND						1	

THREAD TENSION & NEEDLE COOLER ASM COMPONENTS

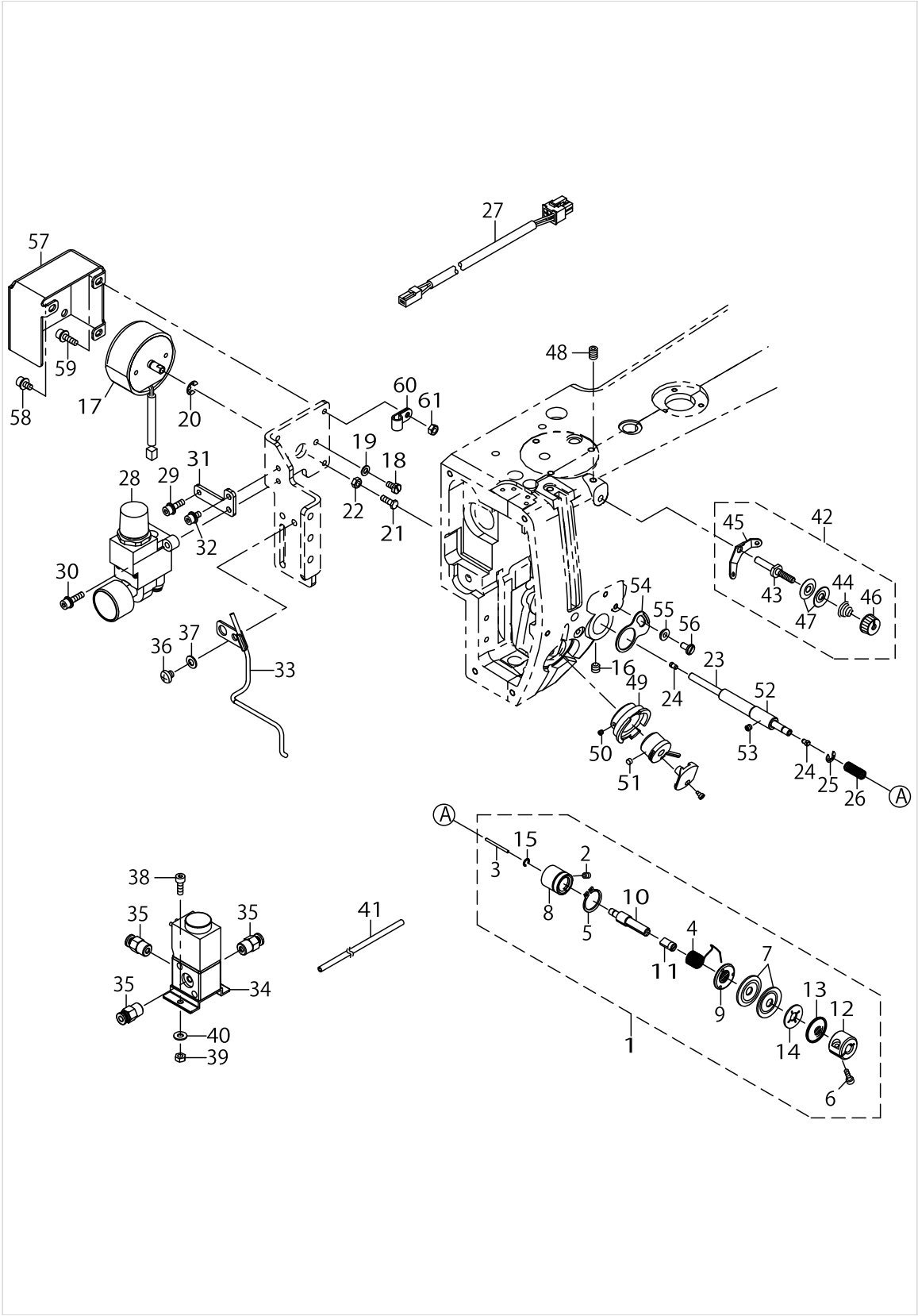

THREAD TENSION & NEEDLE COOLER ASM COMPONENTS

No.	Supply Code	Parts No.	Replacement	Parts name	Remarks	Choice	Step	Level	Cons	Qty	Rep. QTY
1		40172470		THREAD_TENSION_ASM						1	
2		SM8040612TP		SCREW M4 L=6				*		1	
3		B3118552H00		THREAD RELEASE PIN				*		1	
4		22921605		THREAD TAKE-UP SPRING				*		1	
5		RC1700001KP		C-RING 17 (15.7)				*		1	
6		SM6031002TN		SCREW M3 L=10				*		1	
7		22921506		THREAD TENSION DISK				*		2	
8		40174313		TENSION_POST_BASE_ASM				*		1	
9		40126724		TENSION_DISC_HOLDER				*		1	
10		40172472		AT_SHAFT				*		1	
11		40172473		DISK_STOPPER_HOLDER_CAP_PIN				*		1	
12		40172474		DISK_STOPPER_HOLDER_CAP				*		1	
13		B3132012000		TENSION DISC HOLDER				*		1	
14		40174312		THREAD_TENSION_DISK_RUBBER				*		1	
15		RC0410415KP		C-RING (4.09)				*		1	
16		SM80606A2TP		SCREW M6 L=6						1	
17		40174350		AT_SOLENOID_A						1	
18		SM9040800SP		SCREW						2	
19		WP0410846SC		WASHER						2	
20		RE0500000K0		E-RING						1	
21		40174311		SCREW						1	
22		NM6040000SN		NUT M4 TYPE1						1	
23		40173734		THREAD_TENSION_SHAFT						1	
24		26201004		PIN						2	
25		RE0400000K0		E-RING 4						1	
26		22920409		THREAD RELEASE PIN SPRING						1	
27		40173770		AT SOLENOID REL-AY CABLE ASSY						1	
28		PF070001000		MINIATURE DECOM-PRESSION VALVE						1	
29		SL6041492TN		SCREW M4 L=14						1	
30		SL6041692TN		SCREW M4 L=16						1	
31		40173555		REGULATOR_SUPPORT_PLATE						1	
32		SL6040892TN		SCREW M4 L=8						1	
33		40173752		NEEDLE_COOLER_COMPL	OPTIONAL PARTS					1	
34		40173629		SOLENOID VALVE D ASSY	OPTIONAL PARTS					1	
35		PJ3C1040502		HALF UNION 4XM5	OPTIONAL PARTS					2	
36		SM4050501SC		SCREW M5X0.8 L=5	OPTIONAL PARTS					2	
37		WP0531001SC		WASHER M5	OPTIONAL PARTS					2	
38		SM6041202TP		SCREW M4X0.7 L=12	OPTIONAL PARTS					2	
39		NM6040000SN		NUT M4 TYPE1	OPTIONAL PARTS					2	
40		WP0450826SC		WASHER 4.5X10X0.8	OPTIONAL PARTS					2	
41		BT0400251EB		URETHANE TUBE BLACK 4X2.5	OPTIONAL PARTS					3	
42		22963458		THREAD TENSION ASM.						1	
43		22945414		THREAD TENSION POST				*		1	
44	R	22963409	22963458	THREAD TENSION SPRING				*		1	1.00

THREAD TENSION & NEEDLE COOLER ASM COMPONENTS

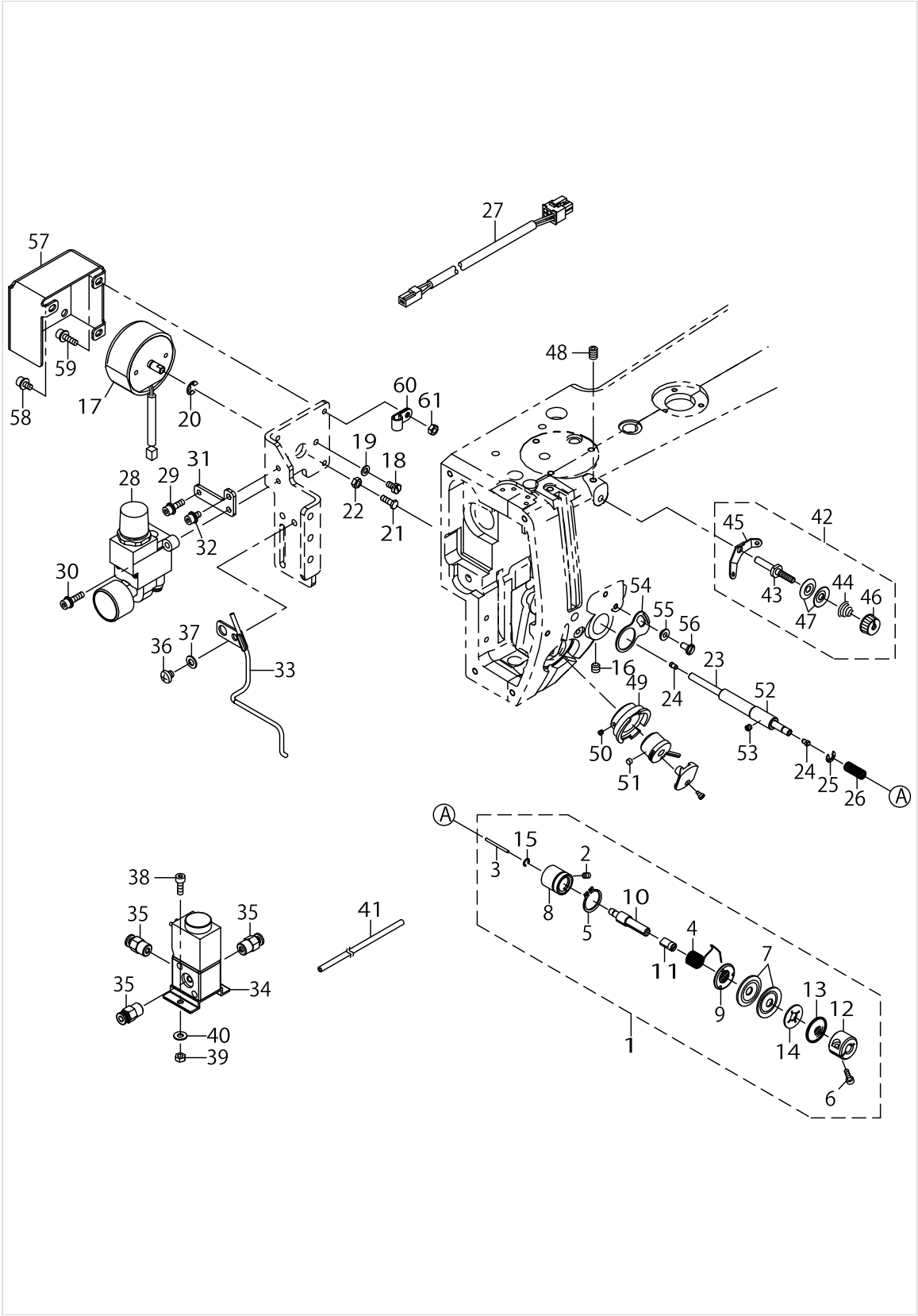

THREAD TENSION & NEEDLE COOLER ASM COMPONENTS

No.	Supply Code	Parts No.	Replacement	Parts name	Remarks	Choice	Step	Level	Cons	Qty	Rep. QTY
45	R	22945604	22963458	THREAD TENSION GUIDE		A	DDL8700H--7/8700J--7/9000B, DLN6390-7	*		1	1.00
45	R	22945604	22945463	THREAD TENSION GUIDE		B	DDL8700-7 and so on	*		1	1.00
46		22945703		THREAD TENSION NUT				*		1	
47		22945802		THREAD TENSION DISK				*		2	
48		40173762		SCREW						1	
49		40173794		TN_SOLENOID_BASE						1	
50		SM8030312TP		SCREW M3 L=3						1	
51		40149044		SOLENOID_SPACER						1	
52		40173732		TENSION_RELEASE_BUSHING						1	
53		SM8040412TP		SCREW M4X4						1	
54		B2702210000		GUIDE PLATE						1	
55		B2703210000		BUSHING						1	
56		SM6040860TP		SCREW M4 L=8						1	
57		40173554		AT_SOLENOID_COVER						1	
58		SL6040892TN		BOLT						1	
59		SL6041492TN		SCREW						2	
60		HX00150000D		CABLE CLIP						2	
61		NM6040000SN		NUT M4						2	

PEN STICK ASM (OPTIONAL PARTS)

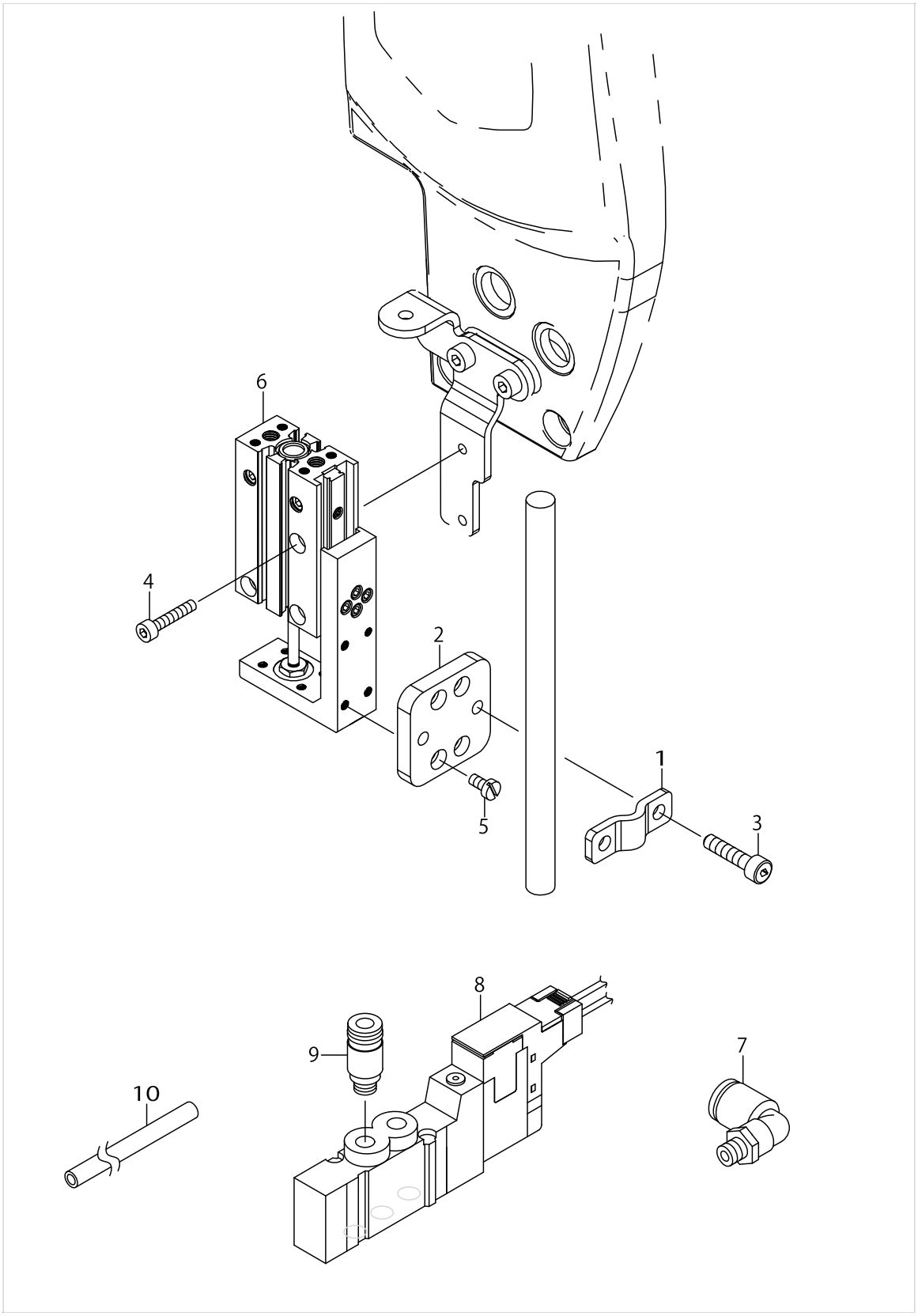

PEN STICK ASM (OPTIONAL PARTS)

No.	Supply Code	Parts No.	Replacement	Parts name	Remarks	Choice	Step	Level	Cons	Qty	Rep. QTY
1		40173550		PEN_PLATE_R						1	
2		40173551		PEN_PLATE_L						1	
3		SM6041802TP		SCREW M4 L=18						2	
4		SM6031602TP		SCREW						2	
5		SM6030600SN		SCREW M3X0.5 L=6						4	
6		PA060200700		AIR CYLINDER						1	
7		PJ304040504		UNION						2	
8		40173628		SOLENOID VALVE C ASSY						1	
9		PJ301040509		HALF UNION						2	
10		BT0400251EB		URETHANE TUBE BLACK 4X2.5						6	

PANEL SUPPORT COMPONENTS

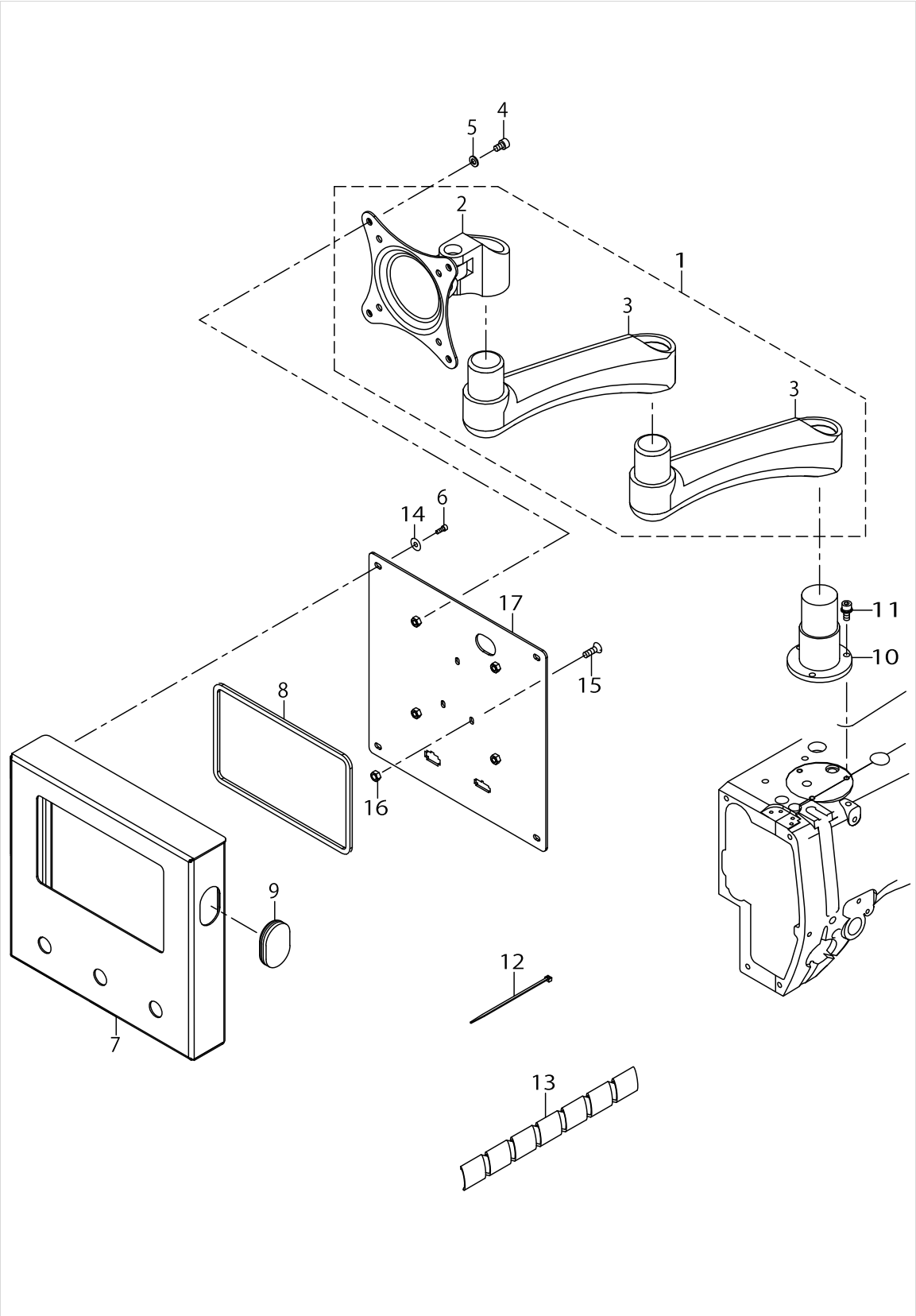

PANEL SUPPORT COMPONENTS

No.	Supply Code	Parts No.	Replacement	Parts name	Remarks	Choice	Step	Level	Cons	Qty	Rep. QTY
1		40173872		MONITOR ASM.						1	
2		40173639		MONITOR_BRACKET				*		1	
3		40173640		MONITOR_ARM				*		2	
4		SM6040802TP		SCREW M4X0.7 L=8						4	
5		WP0431005SP		PLAIN WASHER 4.3X12X1						4	
6		SM6030802TP		SCREW M3X0.5 L=8						4	
7		40173586		PANEL_BOX						1	
8		40173539		PANEL_GASKET						1	
9		40173540		USB_GOM						1	
10		40173796		MONITOR_POST						1	
11		–		–						3	
12		EA9500B0100		CABLE BAND						2	
13		HX00314000A		SPIRAL TUBE						.4	
14		WP0371016SD		WASHER 3.7X8X1						4	
15		SK2351601SE		SCREW						3	
16		NM6050001SC		NUT M5X0.8 TYPE1						3	
17		40173588		PANEL_COVER						1	

OIL LUBRICATION COMPONENTS

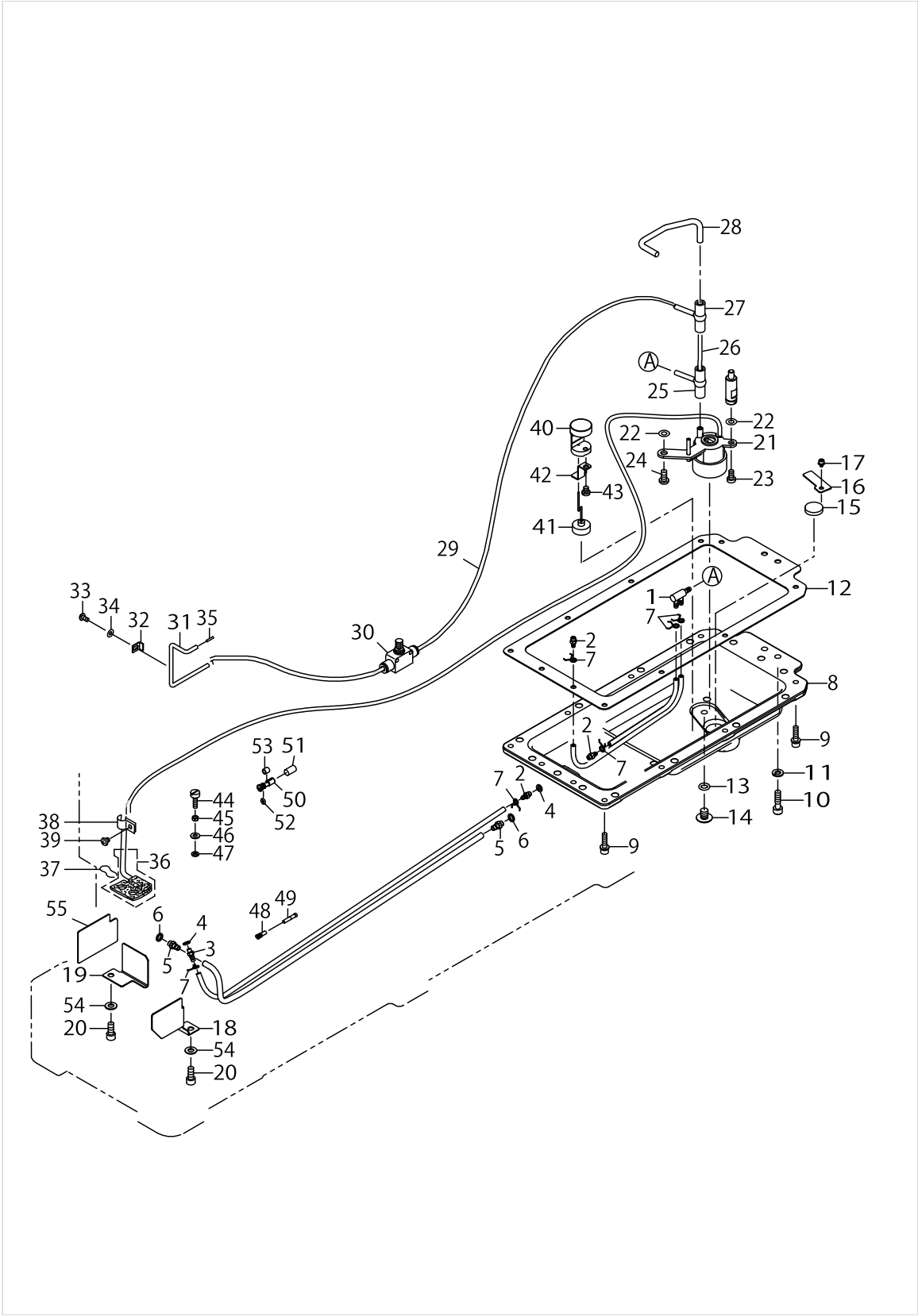

OIL LUBRICATION COMPONENTS

No.	Supply Code	Parts No.	Replacement	Parts name	Remarks	Choice	Step	Level	Cons	Qty	Rep. QTY
1		23629504		DISTRIBUTOR						1	
2		SQ2050453MZ		CONNECTING SCREW						3	
3		SQ1110451MZ		CONNECTING SCREW						1	
4		40097210		GASKET						2	
5		40174011		CONNECTING_SCREW						2	
6		40004749		GASCKET						2	
7		23629306		PIPE STOPPER A						6	
8		40173542		PS700_OIL_TANK						1	
9		SL6052092TN		SCREW M5 L=20						11	
10		SS6152212SP		SCREW 15/64-28 L=22.0						2	
11		WS0610002KP		SPRING WASHER						2	
12		40173543		OIL_TANK_PACKING						1	
13		13170105		RUBBER RING						1	
14	R	13171004	SM0081001SD	DRAIN SCREW						1	1.00
15		B8228125000		OIL RESERVOIR MAGNET						1	
16		40091203		TUBE_HOLDER						1	
17		SL6030592TN		SCREW M3 L=5						1	
18		40174015		OIL_BAFFLE_PLATE						1	
19		40174021		OIL_BAFFLE_PLATE						1	
20		SS6151412TP		SCREW15/64-28L=14						2	
21		40173842		OIL PUMP ASM						1	
22		–		–						2	
23		–		–						1	
24		–		–						1	
25		–		–						1	
26		–		–						1	
27		–		–						1	
28		–		–						1	
29		–		–						1	
30		–		–						1	
31		–		–						1	
32		–		–						2	
33		–		–						2	
34		–		–						2	
35		–		–						1	
36		40173850		RETURN PIPE ASM.						1	
37		22925101		OIL FELT PRESSER						1	
38		–		–						1	
39		–		–						1	
40		40173996		OIL SIGHT GAUGE						1	
41		40173997		ASSY_FLOATER_BAR						1	
42		40173999		FLOATER_BAR_PLATE						1	
43		SM4050655SP		SCREW M5 L=6						1	
44		–		–						1	
45		NS6110310SP		HEXAGONAL NUT 11/64-40						1	
46		WP0450801SD		WASHER 4.5X10X0.8						1	

OIL LUBRICATION COMPONENTS

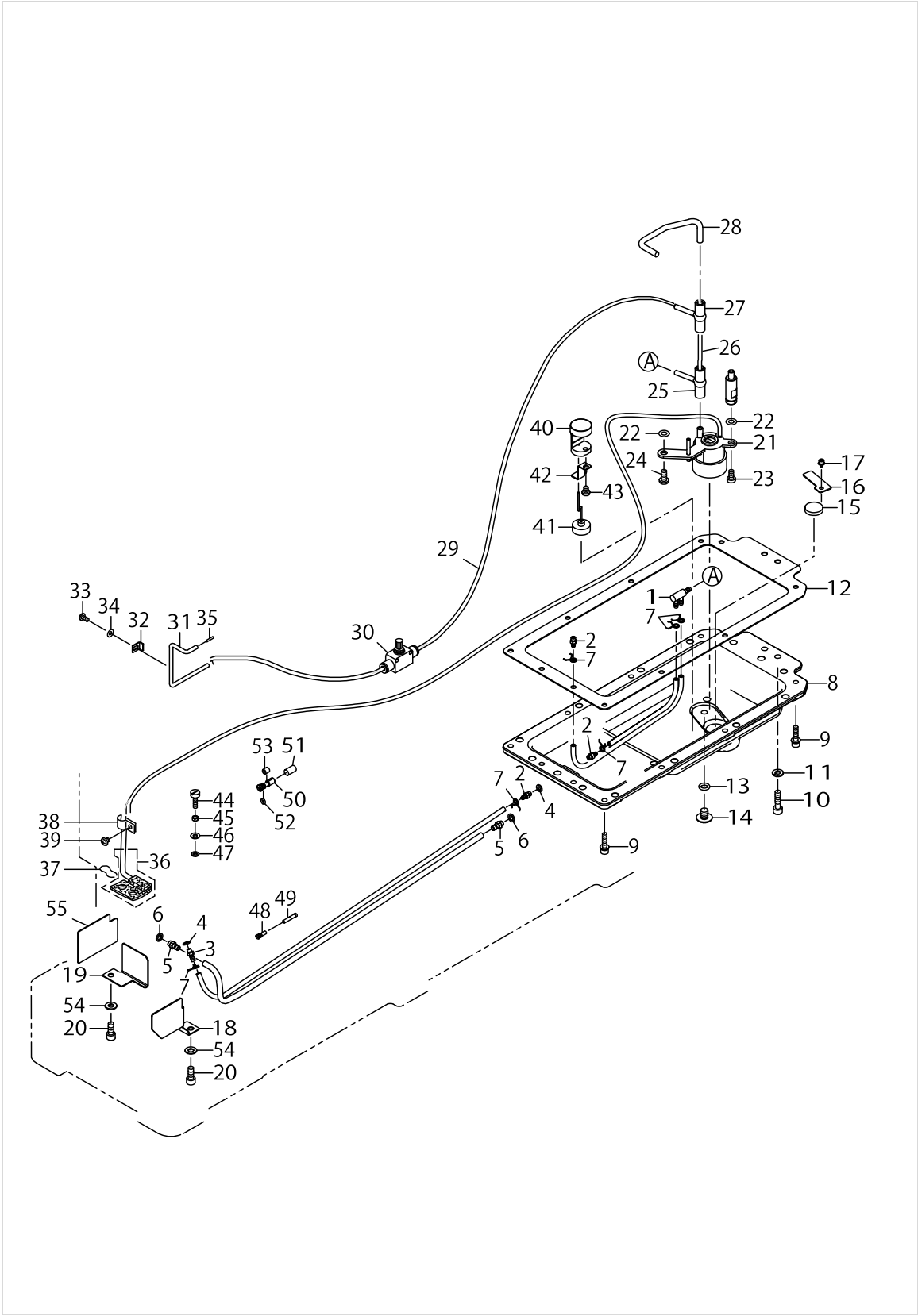

OIL LUBRICATION COMPONENTS

No.	Supply Code	Parts No.	Replacement	Parts name	Remarks	Choice	Step	Level	Cons	Qty	Rep. QTY
47		40097210		GASKET						1	
48		–		–						1	
49		–		–						1	
50		22903900		ADJUSTING PIN						1	
51		40173775		ROLLER_FELT						1	
52		RO029180100		O-RING						1	
53		B1215552000		OIL ADJUSTING COLLAR						1	
54		WP0621016SD		WASHER 6.2X13X1						2	
55		40186577		OIL BAFFLE PLATE LEFT						1	

TABLE COMPONENTS (1)

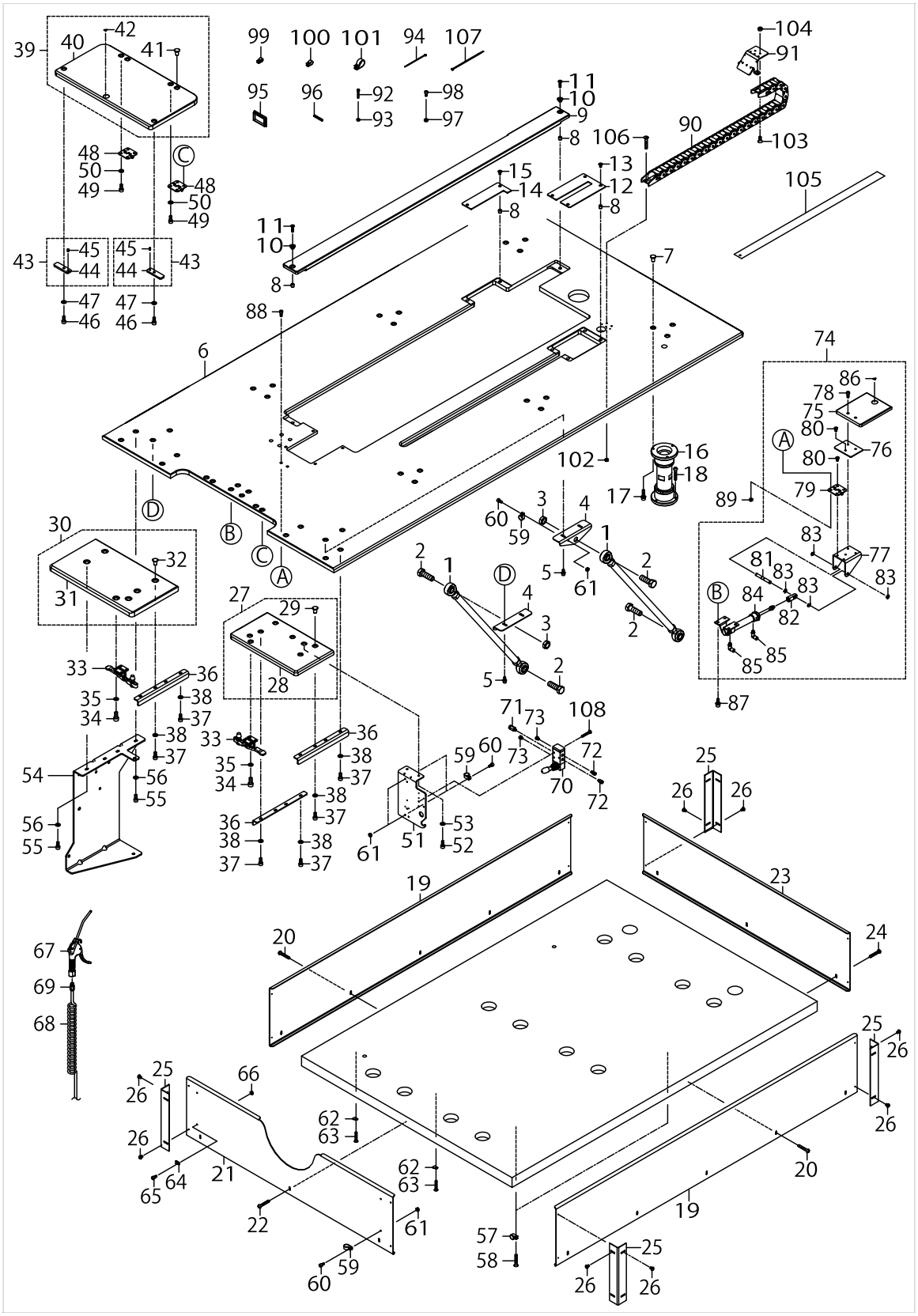

TABLE COMPONENTS (1)

No.	Supply Code	Parts No.	Replacement	Parts name	Remarks	Choice	Step	Level	Cons	Qty	Rep. QTY
1		40173863		SUPPORT_ROD_ASSY						2	
2		40173690		SCREW						4	
3		40173691		NUT						2	
4		40173710		SUPPORT_ROD_ANGLE_PLATE						2	
5		SL6051292TN		SCREW M5 L=12						4	
6		40173692		TABLE						1	
7		40173705		RIVET						38	
8		40173711		RIVET						8	
9		40173706		TABLE_INSIDE_BLOCK						1	
10		40173701		RIVET						2	
11		SM1041601SC		SCREW M4X0.7 L=16						2	
12		40173703		TABLE_COVER_RIGHT						1	
13		SM1040801SC		SCREW M4X0.7 L=8						4	
14		40173712		TABLE_COVER_LEFT						1	
15		SM1040801SC		SCREW M4X0.7 L=8						2	
16		40173641		TABLE_SUPPORT_BASE_ASM						6	
17		SL6052092TN		SCREW M5 L=20						18	
18		SK3482501SE		WOOD SCREW D=4.8 L=25						18	
19		40173695		SHIELD_PLATE						2	
20		40173694		SCREW						10	
21		40173708		TABLE_FRONT_COVER						1	
22		40173694		SCREW						3	
23		40173707		SHIELD_PLATE_BACK						1	
24		40173694		SCREW						3	
25		40173704		ANGLE_SHIELD_PLATE						4	
26		SM3040652TN		SCREW M4 L=6						16	
27		40173866		EXTEND_TABLE_RIGHT_ASSY						1	
28		40173716		EXTEND_TABLE_RIGHT				*		1	
29		40173705		RIVET				*		8	
30		40173867		EXTEND_TABLE_LEFT_ASSY						1	
31		40173717		EXTEND_TABLE_LEFT				*		1	
32		40173705		RIVET				*		6	
33		40173719		TABLE_FRONT_COVER_CLAMP						2	
34		SM6051202TP		SCREW M5X0.8 L=12						4	
35		WP0501016SD		WASHER 5X10.5X1						4	
36		40173548		TABLE_SUPPORT_BRACKET						3	
37		SM6051202TP		SCREW M5X0.8 L=12						12	
38		WP0501016SD		WASHER 5X10.5X1						12	
39		40173868		UNDER_BEAM_RIGHT_ASSY						1	
40		40173718		TABLE_FRONT_COVER				*		1	
41		40173705		RIVET				*		6	
42		CM300200001		FINGER INJURY CA-UTION LABEL (16)				*		1	
43		40173869		UPPER_BEAM_PLATE_REAR_ASSY						2	
44		40173547		TABLE_FRONT_COVER_STOPPER				*		1	
45		PS0400082KP		SPRING PIN TYPE W 4X8				*		1	
46		SM6051202TP		SCREW M5X0.8 L=12						2	

TABLE COMPONENTS (1)

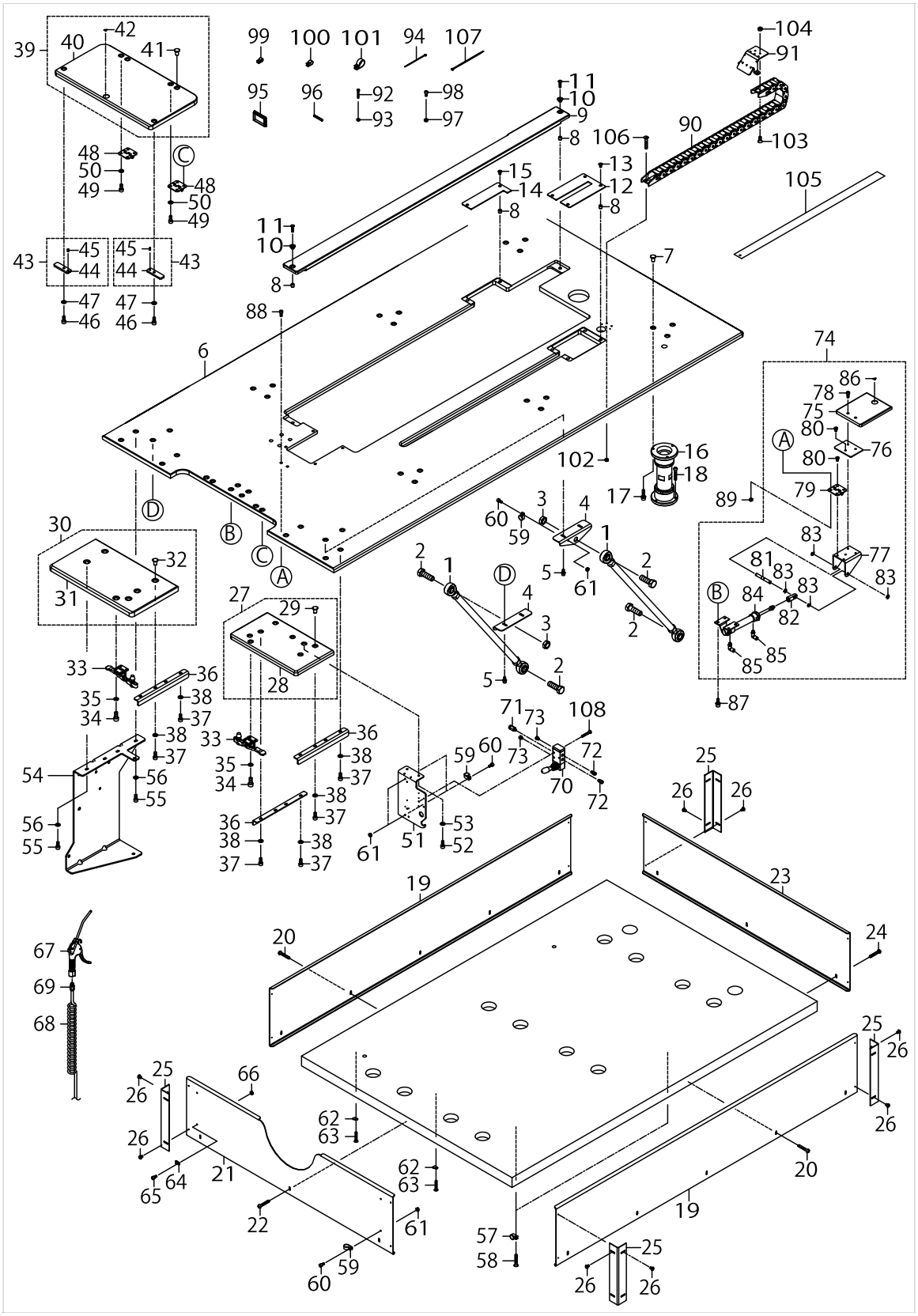

TABLE COMPONENTS (1)

No.	Supply Code	Parts No.	Replacement	Parts name	Remarks	Choice	Step	Level	Cons	Qty	Rep. QTY
47		WP0501016SD		WASHER 5X10.5X1						2	
48		40173714		HINGE						2	
49		SM6051202TP		SCREW M5X0.8 L=12						8	
50		WP0501016SD		WASHER 5X10.5X1						8	
51		40173544		SWITCH_INSTALLATION_BOARD						1	
52		SM6051202TP		SCREW M5X0.8 L=12						2	
53		WP0501016SD		WASHER 5X10.5X1						2	
54		40186376		SUPPORT_BRACKET						1	
55		SM6051202TP		SCREW M5X0.8 L=12						8	
56		WP0501016SD		WASHER 5X10.5X1						8	
57		HX00150000G		CABLE CLAMP						2	
58		SK1412001SD		WOOD SCREW D=4.1 L=20						2	
59		HX00150000G		CABLE CLAMP						5	
60		SM6040802TP		SCREW M4X0.7 L=8						5	
61		NM6040001SD		NUT M4X0.7 TYPE1						2	
62		HX001500000		CABLE CLAMP						2	
63		SK1412001SD		WOOD SCREW D=4.1 L=20						2	
64		HX001500000		CABLE CLAMP						2	
65		SM6040802TP		SCREW M4X0.7 L=8						2	
66		NM6040001SD		NUT M4X0.7 TYPE1						2	
67		40173733		AIR_GUN						1	
68		40173735		AIR_GUN_TUBE						1	
69		PJ210008400		HALF UNION						1	
70		PV015128000		MANUAL VALVE						1	
71		PJ210008300		HALF UNION						1	
72		PJ210004600		HALF UNION						2	
73		PX055105000		SILENCER						2	
74		40173871		TABLE_COVER_ASSY						1	
75		40173713		TABLE_COVER				*		1	
76		40173546		TABLE_COVER_BRACKET_B				*		1	
77		40173545		TABLE_COVER_BRACKET_A				*		1	
78		SM6041602TP		SCREW M4X0.7 L=16				*		2	
79		40173714		HINGE				*		1	
80		SM6040652TP		SCREW M4 L=6				*		3	
81		40173715		SHAFT				*		1	
82		40174023		CYLINDER_JOINT				*		1	
83		RE0700000K0		E-RING 7				*		4	
84		PA2005020A0		AIR CYLINDER				*		1	
85		PJ304045102		ELBOW UNION C				*		2	
86		CM300200001		FINGER INJURY CA-UTION LABEL (16)				*		1	
87		SL6051492TN		SCREW M5 L=14						4	
88		SM6041802TP		SCREW M4 L=18						2	
89		NM6040000SN		NUT M4 TYPE1						2	
90		40173720		TOWLONE						1	
91		40173870		UPPER_BEAM_REAR						1	
92		SM6032002TN		SCREW M3X0.5 L=20						4	

TABLE COMPONENTS (1)

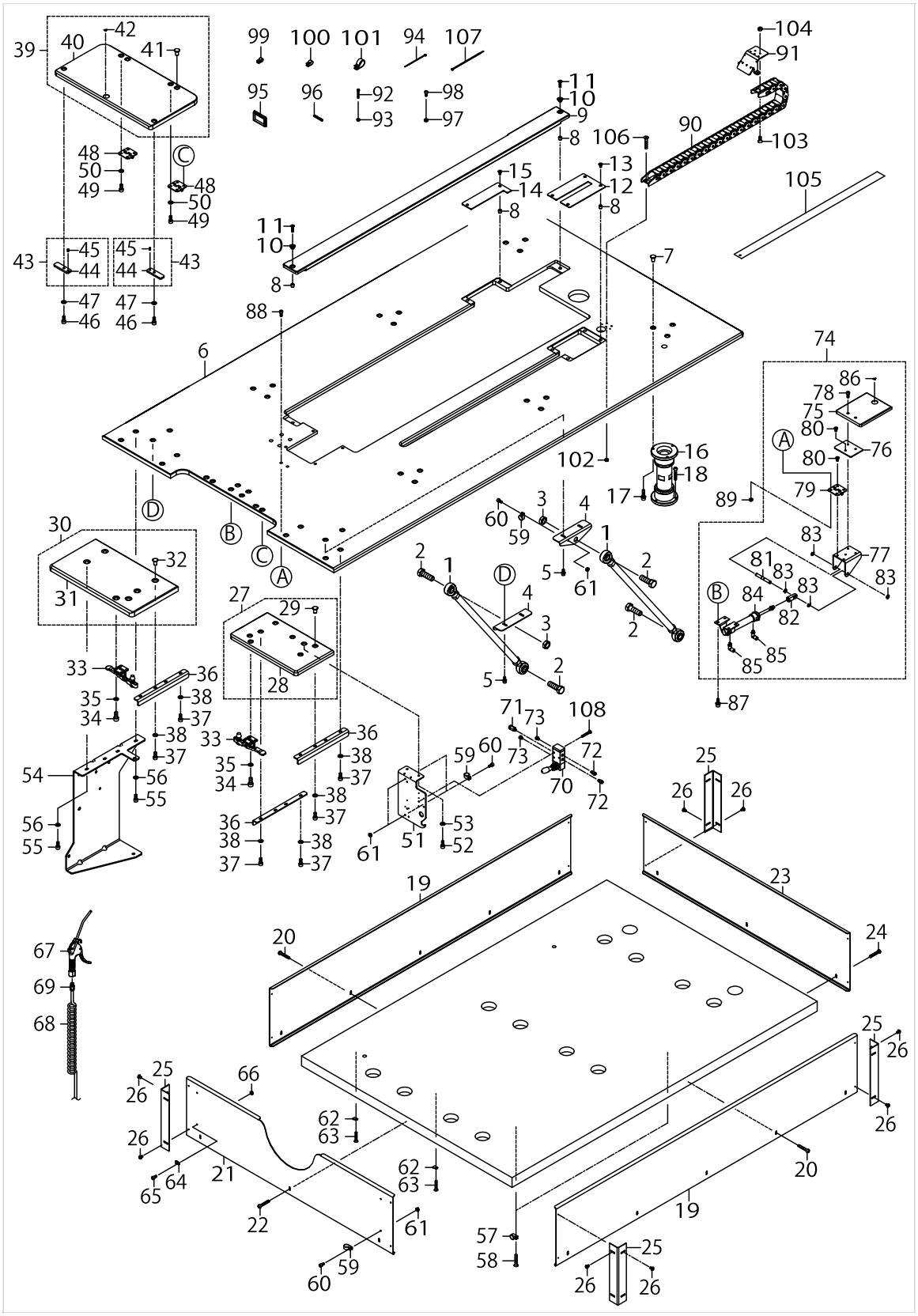

TABLE COMPONENTS (1)

No.	Supply Code	Parts No.	Replacement	Parts name	Remarks	Choice	Step	Level	Cons	Qty	Rep. QTY
93		NM6030001SC		NUT M3X0.5 TYPE1						4	
94		EA9500B0100		CABLE BAND						21	
95		HX004070000		GROMMET						1	
96		EA9002B1100		GROMMET						.07	
97		NM6040001SD		NUT M4X0.7 TYPE1						9	
98		SM6040802TP		SCREW M4X0.7 L=8						7	
99		HX00150000C		CABLE CLAMP						1	
100		HX00150000D		CABLE CLAMP						4	
101		HX00150000M		CABLE CLAMP						1	
102		NM6050001SC		NUT M5X0.8 TYPE1						2	
103		SM1051201SC		SCREW M5X0.8 L=12						2	
104		NM6050001SC		NUT M5X0.8 TYPE1						2	
105		40173745		CABLE SHEET						2	
106		SM1053001SP		SCREW M5X0.8 L=30						2	
107		EA9500B0200		CABLE BAND 150						2	
108		SM4042501SC		SCREW M4X0.7 L=25						3	

TABLE COMPONENTS (2)

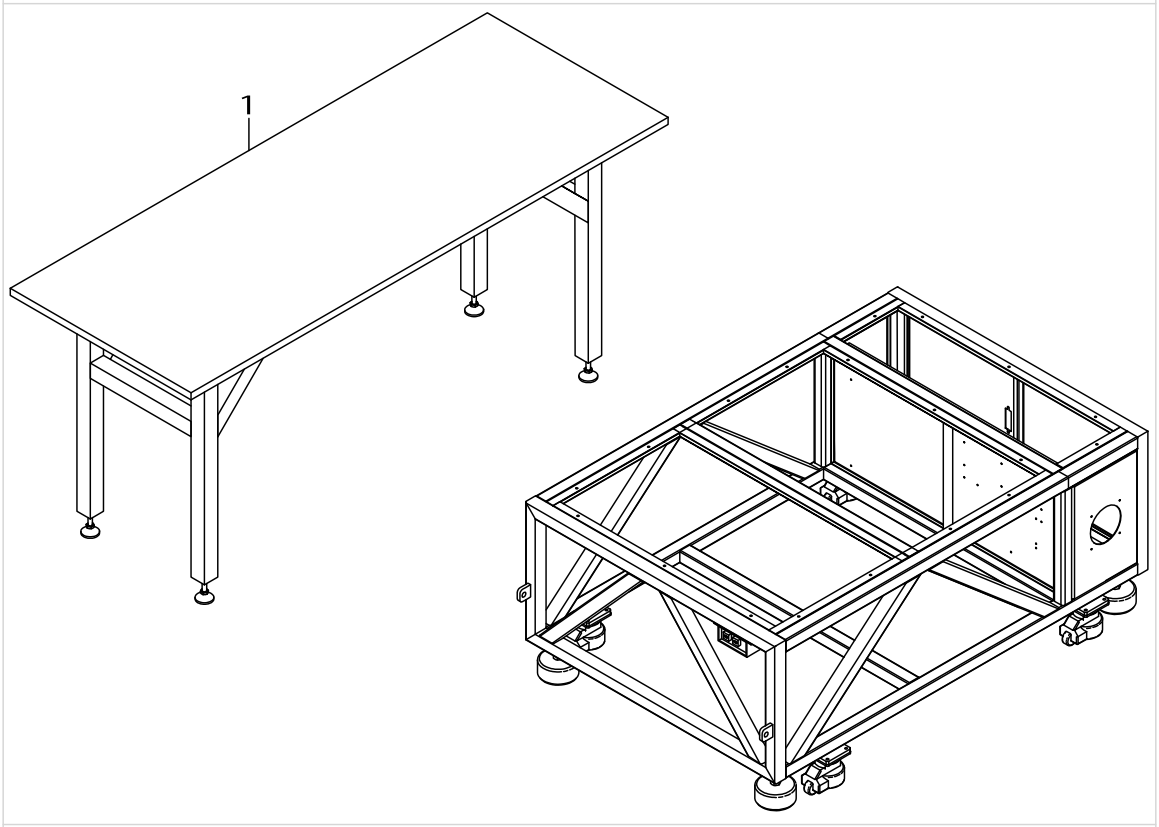

TABLE COMPONENTS (2)

No.	Supply Code	Parts No.	Replacement	Parts name	Remarks	Choice	Step	Level	Cons	Qty	Rep. QTY
1		40173750		AUXILIARY_TABLE_ASM						2	

THREAD STAND COMPONENTS

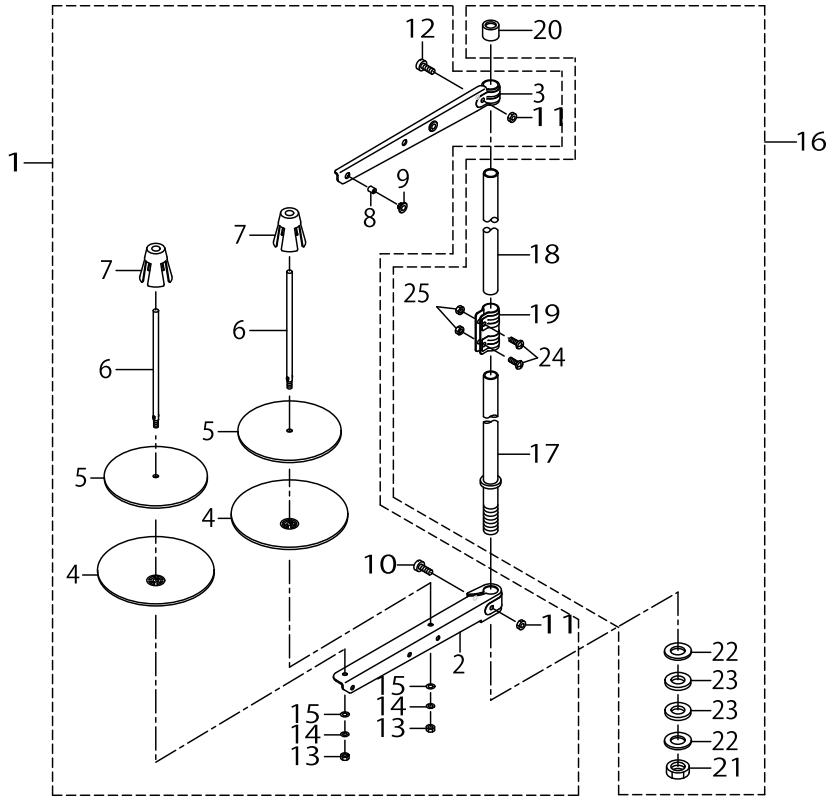

THREAD STAND COMPONENTS

No.	Supply Code	Parts No.	Replacement	Parts name	Remarks	Choice	Step	Level	Cons	Qty	Rep. QTY
1		40108402		THRED_STAND_B						1	
2		40085786		SPOOL REST ARM (LOWER)				*		1	
3		40085787		SPOOL REST ARM (UPPER)				*		1	
4		40085788		SPOOL REST				*		2	
5		40085789		SPOOL REST CUSHION				*		2	
6		40085790		SPOOL PIN				*		2	
7		40085791		SPOOL RETAINER				*		2	
8		40085794		THREAD GUIDE				*		2	
9		40085795		THREAD GUIDE BUSHING				*		2	
10		40096326		SPOOL REST ARM LOWER SCREW				*		1	
11		NM6050001SE		NUT M5				*		2	
12	R	40096327	SM4053001SE	SPOOL REST ARM UPPER SCREW				*		1	1.00
13		NM6050001SE		NUT M5				*		2	
14		WS0510002KN		SPRING WASHER M5				*		2	
15		WP0531001SC		WASHER M5				*		2	
16		40108401		THREAD_STAND_A						1	
17		40085784		SPOOL REST ROD LOWER				*		1	
18		40085785		SPOOL REST ROD UPPER				*		1	
19		40085792		SPOOL REST ROD JOINT				*		1	
20		40085793		SPOOL REST ROD RUBBER CAP				*		1	
21		40096325		SPOOL REST ROD NUT				*		1	
22		WP1612616SE		WASHER 16X30X2.6				*		2	
23		40085796		SPOOL REST ROD RUBBER CUSHION				*		2	
24		SM4051405SE		SCREW M5 L=14				*		2	
25		NM6050001SE		NUT M5				*		2	

ACCESSORIE PARTS COMPONENTS

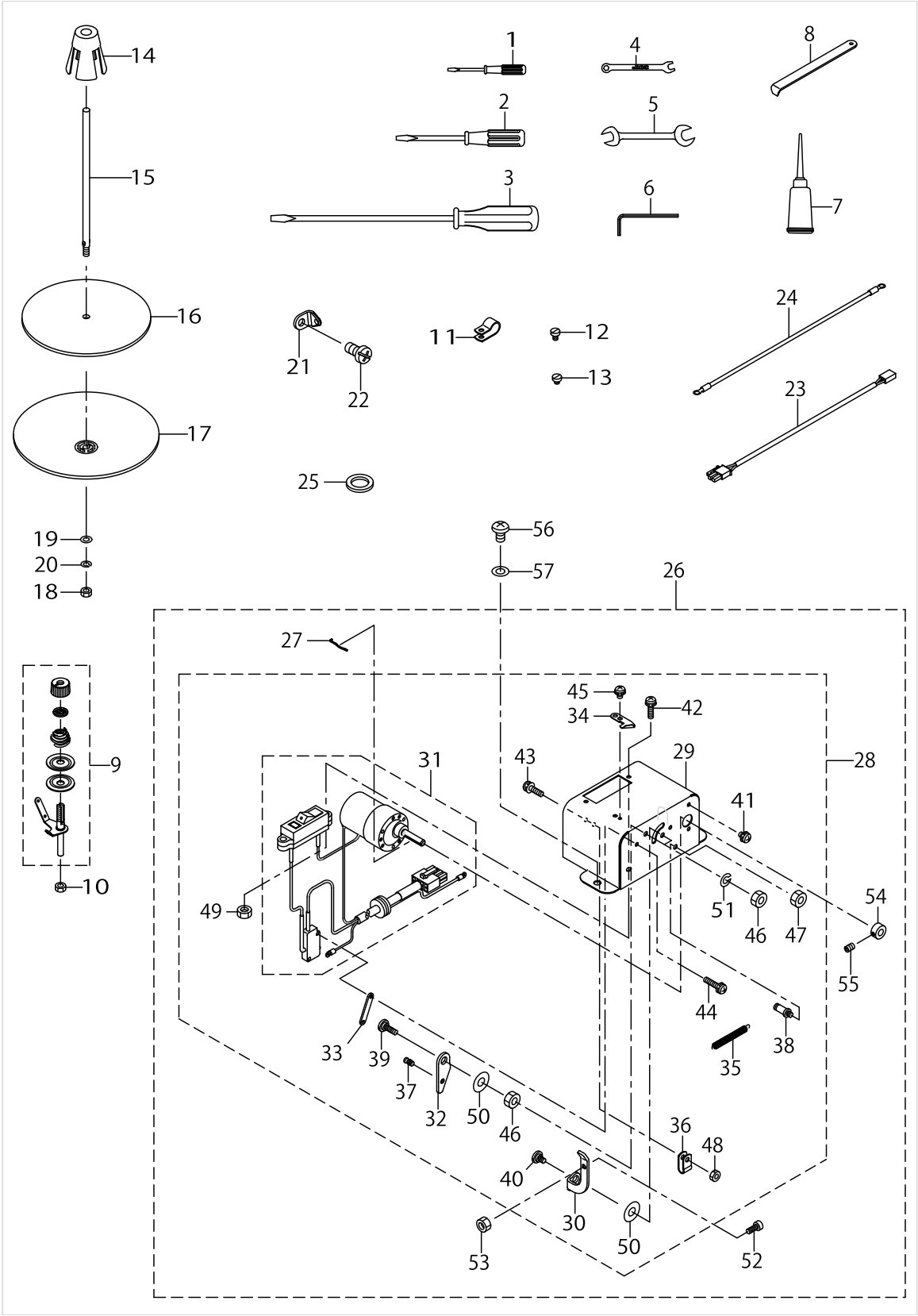

ACCESSORIE PARTS COMPONENTS

No.	Supply Code	Parts No.	Replacement	Parts name	Remarks	Choice	Step	Level	Cons	Qty	Rep. QTY
1		22933204		SCREW DRIVER						1	
2		22933105		SCREW DRIVER						1	
3		22933006		SCREW DRIVER						1	
4		13160106		SPANNER (5X6)						1	
5		B9143372000		WRENCH (7.1X8.1)						1	
6		40055591		HEXAGONAL WRENCH KYE						1	
7		B91210120A0		OILER ASM.						1	
8		B9101490000		DRIVER						1	
9		40091212		BOBBIN_THREAD_TENSION_ASM.						1	
10		NM6050001SD		NUT M5X0.8 TYPE1						1	
11		HX00150000D		CABLE CLAMP						2	
12		SM6040600SP		SCREW M4 L=6						2	
13		SM6040450TP		SCREW M4 L=4						2	
14		40085791		SPOOL RETAINER						1	
15		40085790		SPOOL PIN						1	
16		40085789		SPOOL REST CUSHION						1	
17		40085788		SPOOL REST						1	
18		NM6050001SE		NUT M5X0.8 TYPE1						1	
19		WP0531001SC		WASHER M5						2	
20		WS0510002KN		SPRING WASHER M5						1	
21		40010414		THREAD_GUIDE_NO.1						1	
22		SM4050601SC		SCREW M5X0.8 L=6						1	
23		40174012		BOBBIN_WINDER_RE-LAY_CABLE_ASSY						1	
24		40173771		FG CORD ASSY						1	
25		WP1602616SZ		WASHER 16X24X2.6						2	
26		13870266		BOBBIN THREAD WINDING DEVICE						1	
27		B3212761000		LATCH SPRING				*		1	
28		13870258		BOBBIN THREAD WIDING DEVICE				*		1	
29		13870209		BOBBIN THREAD COVER				*		1	
30		13870605		BOBBIN GUIDE				*		1	
31		13874052		MOTOR ASM.				*		1	
32	D	13889704		SWITCH PUSHING PLATE				*		1	
33	R	11102308	22954408	MICRO SWITCH PLATE				*		1	1.00
34		10502300		THREAD CUTTER				*		1	
35		B3041980000		SPRING				*		1	
36		HX001230000		CABLE CLIP				*		1	
37	R	B1110280000	26017400	THREAD CUTTING LINK SPRING RAC				*		1	1.00
38		B3413227000		SPRINGSUSPENSION				*		1	
39		SD0720222TP		HINGE SCREW D=7.24 H=2.2				*		1	
40		SD0720221SP		HINGE SCREW D=7.24 H=2.2				*		1	
41		SL4030591SC		SCREW M3X5				*		3	
42		SL4031281SC		SCREW M3 L=12				*		2	
43		SL4031281SC		SCREW M3 L=12				*		2	
44		SL4031481SC		SCREW M3X14				*		2	
45		SL4030591SC		SCREW M3X5				*		1	

ACCESSORIE PARTS COMPONENTS

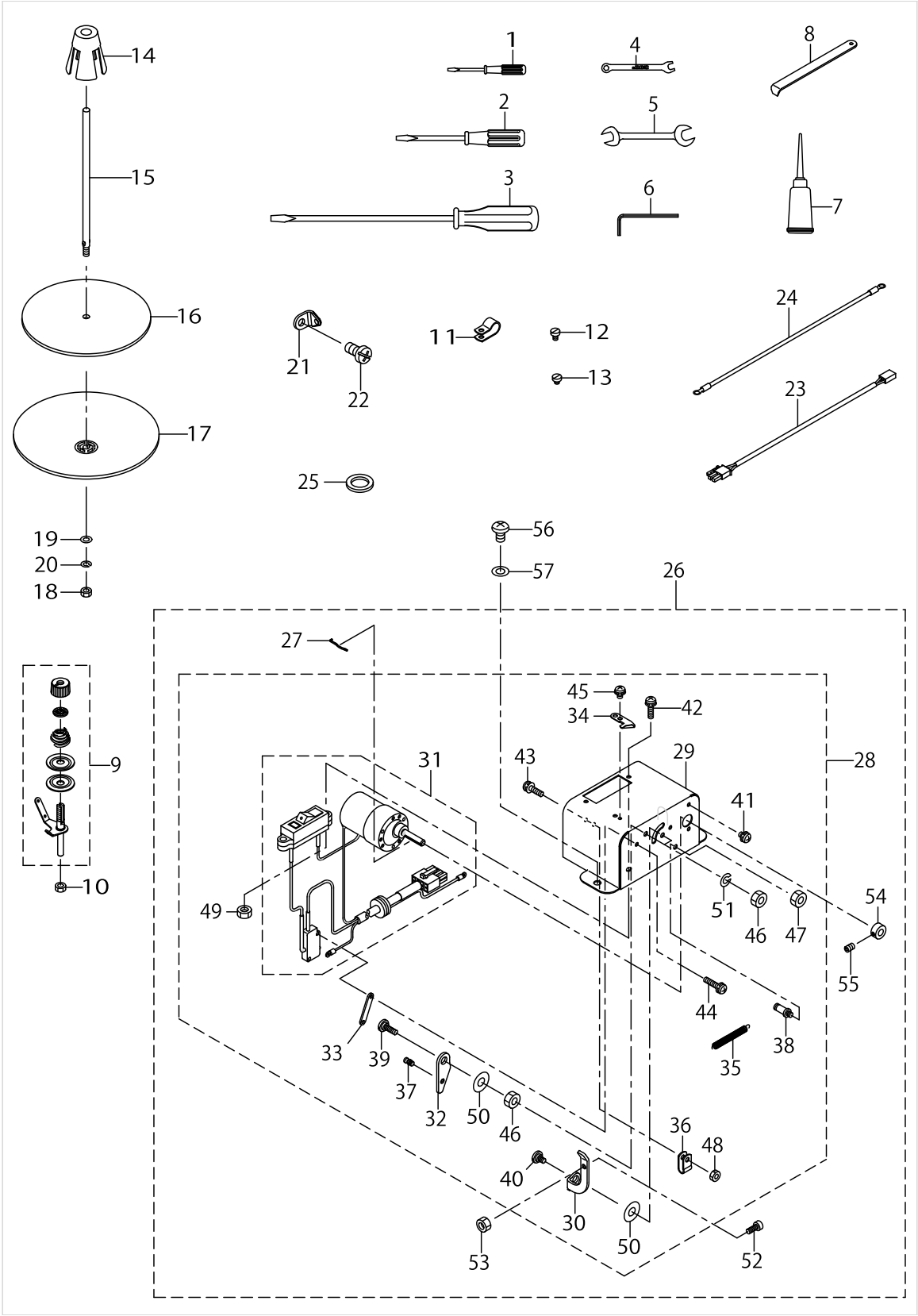

ACCESSORIE PARTS COMPONENTS

No.	Supply Code	Parts No.	Replacement	Parts name	Remarks	Choice	Step	Level	Cons	Qty	Rep. QTY
46		NS6110420SP		NUT 11/64-40				*		3	
47		NS6110420SP		NUT 11/64-40				*		1	
48		NM6030001SC		NUT M3				*		2	
49		NM6030001SC		NUT M3				*		2	
50		WP0551016SH		WASHER 5.5X13X1				*		2	
51		WS0451040KP		SPRING WASHER 4.5X8.5X1				*		2	
52		B3208280000		BOBBIN WINDER A-DJUSTING SCREW				*		1	
53		NS6110420SP		NUT 11/64-40				*		1	
54	R	CS0640611SP	CS064061ASP	THRUST HOLDER				*		1	1.00
55		SS8090530TP		SCREW 9/64-40 L=5.0				*		1	
56	D	SM4050801SC		SCREW M5X0.8 L=8						2	
57		WP0531001SC		WASHER						2	

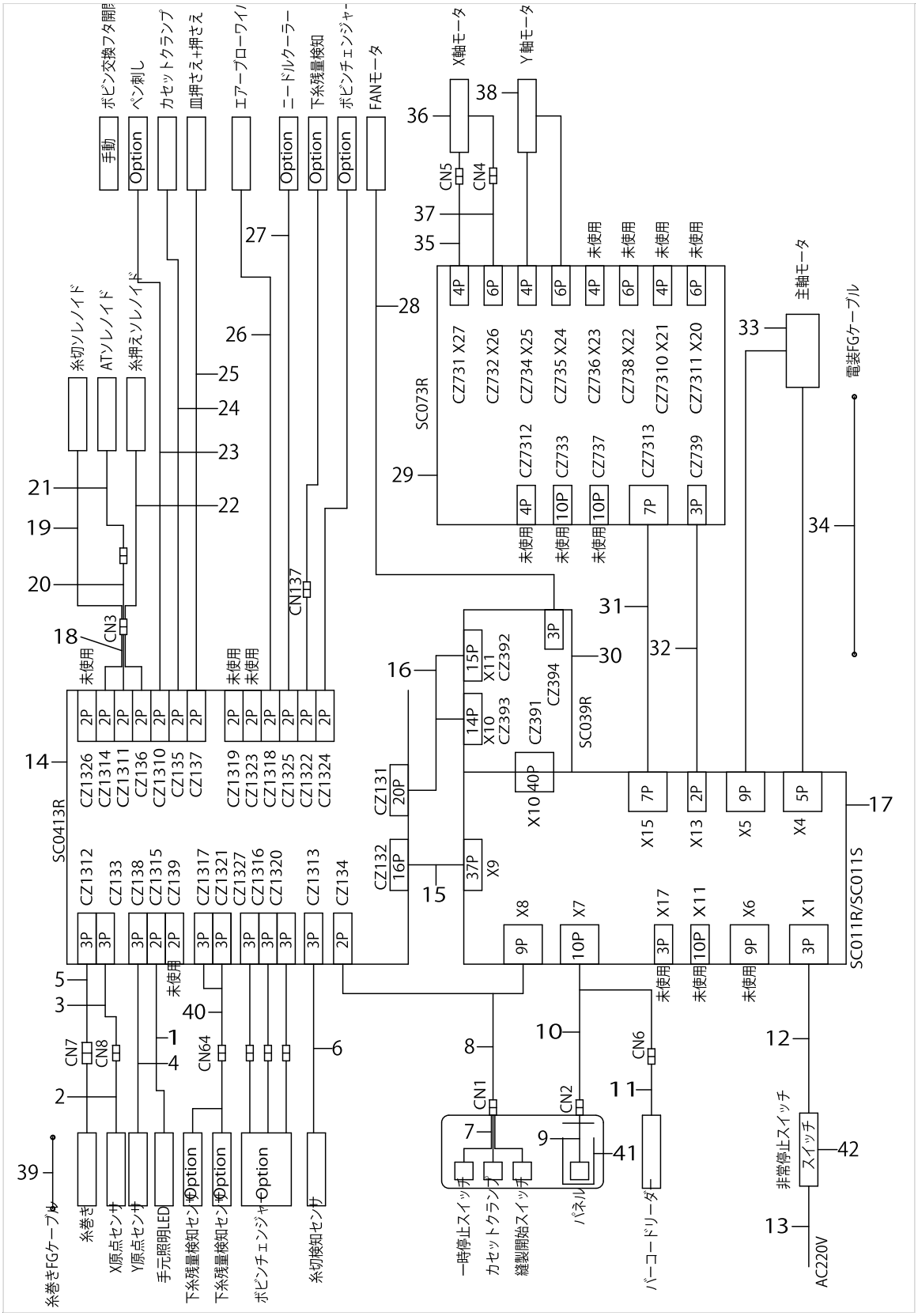
ボビン交換フタ開閉
手動
ペン刺し
Option
カセットクランプ
皿押さえ+押さえ
エアーブローワイパー
ニードルクーラー
下糸残量検知
ボビンチェンジャー
FANモータ
X軸モータ
Y軸モータ
糸切ソレノイド
ATソレノイド
糸押えソレノイド
CN137
CN3
CN5
CN4
SC073R
CZ731 X27
CZ732 X26
CZ734 X25
CZ735 X24
CZ736 X23
CZ738 X22
CZ7310 X21
CZ7311 X20
CZ7312
CZ733
CZ737
CZ7313
CZ739
未使用
主軸モータ
電装FGケーブル
SC039R
CZ394
CZ391
CZ392
CZ393
X11
X10
X9
CZ131
CZ132
SC0413R
CZ1326
CZ1314
CZ1311
CZ136
CZ1310
CZ135
CZ137
CZ1319
CZ1323
CZ1318
CZ1325
CZ1322
CZ1324
CZ1312
CZ133
CZ138
CZ1315
CZ139
CZ1317
CZ1321
CZ1327
CZ1316
CZ1320
CZ1313
CZ134
X15
X13
X5
X4
X8
X7
X17
X11
X6
X1
SC011R/SC011S
CN7
CN8
CN64
CN1
CN2
CN6
糸巻きFGケーブル
糸巻き
X原点センサ
Y原点センサ
手元照明LED
下糸残量検知センサ
ボビンチェンジャー
糸切検知センサ
一時停止スイッチ
カセットクランプ
縫製開始スイッチ
パネル
バーコードリーダー
非常停止スイッチ
スイッチ
AC220V

ELECTRIC COMPONENTS

No.	Supply Code	Parts No.	Replacement	Parts name	Remarks	Choice	Step	Level	Cons	Qty	Rep. QTY
1		–		–						1	
2		40173608		X_ORG_SENSOR_ASSY						1	
3		40173769		X_ORG_SENSOR_RE-LAY_CABLE_ASSY						1	
4		40173609		Y_ORG_SENSOR_ASSY						1	
5		40174012		BOBBIN_WINDER_RE-LAY_CABLE_ASSY						1	
6		40173621		THREAD BREAK DETECTOR ASSY						1	
7		40173624		SWITCH CABLE ASSY						1	
8		40173612		PANEL_SWITCH_CABLE_ASSY						1	
9		40173743		PANEL_CABLE_ASSY						1	
10		40173768		BCD_LEADER_RELAY_CABLE_ASSY						1	
11		40173606		BCD_LEADER_ASSY						1	
12		40173763		AC_INPUT_CORD_ASSY_4M						1	
13		40173764		AC_INPUT_CORD_ASSY_3M						1	
14		40173605		SC0413R_PCB_ASSY						1	
15		40173611		I/F_CABLE(X9)						1	
16		40173610		I/F_CABLE(X10/X11)						1	
17		40173618		SC011R/SC011S_PCB_ASSY						1	
18		40173613		SOLENOID_RELAY_CABLE_ASSY						1	
19		40173631		THREAD_TRIMMER_SOLENOID_ASM						1	
20		40173770		AT SOLENOID REL-AY CABLE ASSY						1	
21		40174350		AT_SOLENOID_A						1	
22		40173623		THREAD_NIPPER_SOLENOID						1	
23		40173628		SOLENOID VALVE C ASSY						1	
24		40173626		SOLENOID VALVE A ASSY						1	
25		40173627		SOLENOID VALVE B ASSY						1	
26		40173630		SOLENOID VALVE E ASSY						1	
27		40173629		SOLENOID VALVE D ASSY						1	
28		40174000		FAN MOTOR CABLE ASSY						1	
29		40173620		SC073R_PCB_ASSY						1	
30		40173619		SC039R_PCB_ASSY						1	
31		40174001		PCB CABLE ASSY						1	
32		40174002		PCB CABLE ASSY						1	
33		40173602		AC_SERVO_MOTOR_ASSY						1	
34		40173607		FG_CABLE						1	
35		40173765		X_MOTOR_RELAY_CABLE_ASSY						1	
36		40173603		X_MOTOR_ASSY						1	
37		40173766		X_MOTOR_ENC_REL-AY_CABLE_ASSY						1	
38		40173604		Y_MOTOR_ASSY						1	
39		40173771		FG CORD ASSY						1	
40		40173772		THREAD_AMOUNT_RELAY_CABLE						1	
41		40173601		PANEL_ASSY						1	
42		HA005820000		SWITCH						1	

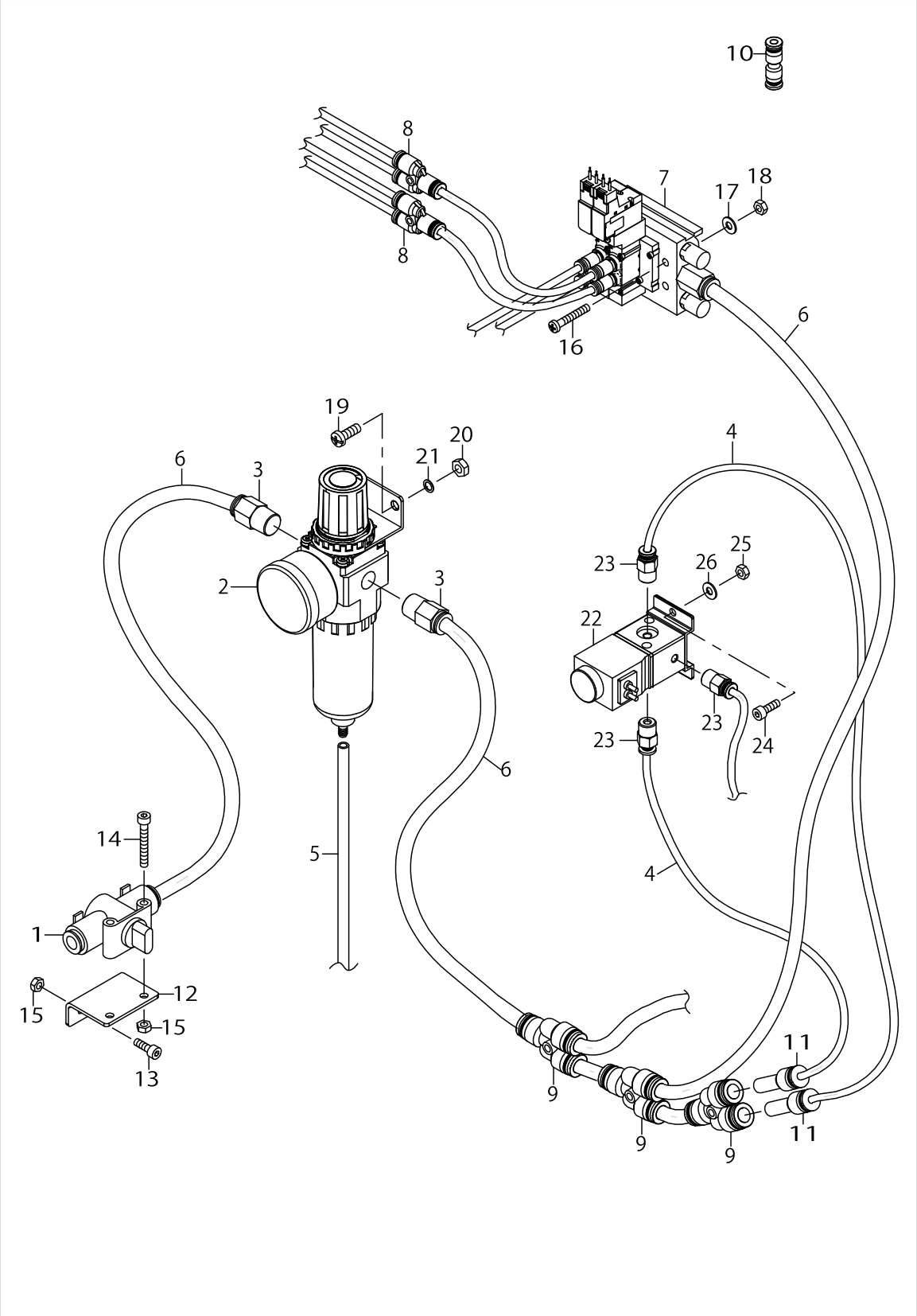
10
8
8
7
17
18
16
6
19
20
21
6
3
4
2
3
23
26
25
22
23
23
24
6
14
5
4
1
12
15
15
13
9
9
9
11
11

PNEUMATIC COMPONENTS

No.	Supply Code	Parts No.	Replacement	Parts name	Remarks	Choice	Step	Level	Cons	Qty	Rep. QTY
1		PV010016000		QUICK_EXHAUST_VALVE						1	
2		PF0252180A0		REGULATOR						1	
3		PJ210008500		UNION						2	
4		BT0400251EB		URETHANE TUBE BLACK 4X2.5						24	
5		BT0600401EB		URETHANE TUBE BLACK 6X4						1	
6		BT0800501EB		URETHANE TUBE BLACK 8X5						4	
7		40173730		SOLENOID_VALVE_ASSY						1	
8		PJ3C8040002		UNION						2	
9		PJ308080006		UNION						4	
10		PJ303040007		UNION						2	
11		PJ309040007		UNION						2	
12		40174034		QUICK_EXHAUST_VALVE_PLATE						1	
13		SM6041202TP		SCREW						2	
14		SM6043002TN		SCREW						2	
15		NM6040000SN		NUT M4						4	
16		SM4042555SP		SCREW						4	
17		WP0450826SC		WASHER						4	
18		NM6040000SN		NUT M4						4	
19		SM4051455SP		SCREW						2	
20		NM6050001SP		NUT M5						2	
21		WP0510516SD		WASHER						2	
22		40173630		SOLENOID VALVE E ASSY						1	
23		PJ3C1040502		UNION						3	
24		SM6041202TP		SCREW						2	
25		NM6040000SN		NUT M4						2	
26		WP0450826SC		WASHER						2	

HOW TO MAKE USE OF THIS PARTS LIST

1.As to "#01" and "#02" refer to the "Note" given at the bottom of the respective pages.

2.Codes on the "Qty" column

・Each numeral indicates the number of parts required.

・"0.1" and "2.5" indicate the length (in meters) of the respective parts.

3.Parentheses mean that the corresponding part is a subpart that constructs an assembly part.

4.Dotted lines on the Figures indicate assembly parts.

5.As to the parts with marks of "☆"(Consumable parts)and "◎"(optional parts)on the respectie parts, it is recommended to prepare spares.

１．リストページの＃０１、＃０２の印は、ページ下の”注記”の説明を参照下さい。

２．数量欄の数字は、個数を表し、０．１、２．５等の数値は、長さ（単位メートル）を表します。

３．数量欄の（　）は、組部品を構成している子部品であることを意味します。

４．イラストページのーーーーー枠は、組構成であることを意味します。

５．リストページの”☆”（消耗部品）、”◎”（オプション部品）の印が付いた部品は、
予備を準備しておくことをお奨めします。

NUMERICAL INDEX OF PARTS

PART NO	PAGE	REF NO.
–	2	65
–	4	65
–	6	38
–	8	50
–	10	50
–	12	32
–	14	21
–	16	28
–	22	17
–	34	11
–	36	49
–	38	49
–	54	1
10502300	50	34
11017209	12	30
11017357	12	29
11102308	50	33
11403953	12	20
13160106	50	4
13170105	36	13
13171004	36	14
13870209	50	29
13870258	50	28
13870266	50	26
13870605	50	30
13874052	50	31
13889704	50	32
22901409	12	2
22903900	38	50
22905103	6	31
22906101	12	1
22916308	22	8
22918304	12	23
22918403	12	24～27
22918502	12	24～27
22918601	12	24～27
22918700	12	24～27
22920409	28	26
22921506	28	7
22921605	28	4
22925101	36	37
22933006	50	3
22933105	50	2
22933204	50	1
22945414	28	43

PART NO	PAGE	REF NO.
22945604	30	45
22945703	30	46
22945802	30	47
22963409	28	44
22963458	28	42
23629306	36	7
23629504	36	1
26037200	2	38
26201004	28	24
26211904	4	51
40004749	36	6
40010414	4	53
40010414	50	21
40010805	22	7
40023223	12	12
40025414	4	57
40055591	50	6
40078133	8	31
40084059	24	42
40084091	24	27
40085784	48	17
40085785	48	18
40085786	48	2
40085787	48	3
40085788	48	4
40085788	50	17
40085789	48	5
40085789	50	16
40085790	48	6
40085790	50	15
40085791	48	7
40085791	50	14
40085792	48	19
40085793	48	20
40085794	48	8
40085795	48	9
40085796	48	23
40086740	6	25
40088225	24	2
40088226	24	1
40088228	24	3
40088229	24	4
40090002	6	9
40090003	6	12
40090004	6	1

PART NO	PAGE	REF NO.
40090005	22	13
40090006	6	10
40090007	6	13
40090008	6	2
40090009	22	14
40090415	24	13
40090416	24	43
40090417	24	19
40090418	24	20
40090419	24	12
40090488	24	41
40090489	24	39
40091087	26	50
40091147	24	40
40091203	36	16
40091212	50	9
40096325	48	21
40096326	48	10
40096327	48	12
40097210	36	47
40097210	38	47
40108401	48	16
40108402	48	1
40126724	28	9
40145927	22	2
40149044	30	51
40172470	28	1
40172472	28	10
40172473	28	11
40172474	28	12
40173539	34	8
40173540	34	9
40173541	18	20
40173542	36	8
40173543	36	12
40173544	42	51
40173545	42	77
40173546	42	76
40173547	40	44
40173548	40	36
40173550	32	1
40173551	32	2
40173553	8	16
40173554	30	57
40173555	28	31

NUMERICAL INDEX OF PARTS

PART NO	PAGE	REF NO.
40173556	6	21
40173557	6	22
40173559	12	21
40173560	22	1
40173561	22	4
40173563	22	5
40173564	18	19
40173565	8	1
40173566	8	30
40173567	16	12
40173568	14	10
40173572	4	79
40173574	2	17
40173576	2	21
40173577	2	24
40173578	2	27
40173579	2	41
40173580	2	43
40173582	4	80
40173584	18	31
40173586	34	7
40173588	34	17
40173590	6	20
40173591	6	33
40173592	12	3
40173593	22	6
40173595	8	17
40173596	8	18
40173598	2	19
40173601	54	41
40173602	54	33
40173603	54	36
40173604	54	38
40173605	54	14
40173606	54	11
40173607	54	34
40173608	54	2
40173609	54	4
40173610	54	16
40173611	54	15
40173612	54	8
40173613	54	18
40173618	54	17
40173619	54	30
40173620	54	29

PART NO	PAGE	REF NO.
40173621	54	6
40173623	54	22
40173624	54	7
40173626	54	24
40173627	54	25
40173628	32	8
40173628	54	23
40173629	28	34
40173629	54	27
40173630	54	26
40173630	56	22
40173631	14	1
40173631	54	19
40173632	6	41
40173633	6	42
40173635	22	20
40173639	34	2
40173640	34	3
40173641	40	16
40173643	6	28
40173644	22	11
40173645	18	2
40173646	18	3
40173647	18	5
40173648	18	7
40173649	18	9
40173650	18	11
40173651	18	13
40173652	18	15
40173653	18	17
40173659	18	22
40173660	18	23
40173661	18	29
40173663	18	34
40173664	18	36
40173665	18	37
40173667	18	40
40173669	18	43
40173671	18	46
40173672	20	48
40173674	20	51
40173675	20	54
40173676	20	57
40173677	20	61
40173678	20	63

PART NO	PAGE	REF NO.
40173679	20	66
40173680	20	67
40173683	20	74
40173684	20	76
40173690	40	2
40173691	40	3
40173692	40	6
40173694	40	24
40173695	40	19
40173701	40	10
40173703	40	12
40173704	40	25
40173705	40	41
40173706	40	9
40173707	40	23
40173708	40	21
40173710	40	4
40173711	40	8
40173712	40	14
40173713	42	75
40173714	42	79
40173715	42	81
40173716	40	28
40173717	40	31
40173718	40	40
40173719	40	33
40173720	42	90
40173725	18	33
40173728	16	26
40173730	56	7
40173732	30	52
40173733	42	67
40173734	6	43
40173734	28	23
40173735	42	68
40173743	54	9
40173745	44	105
40173746	14	6
40173747	14	16
40173750	46	1
40173752	28	33
40173754	8	15
40173756	6	39
40173758	2	50
40173758	4	50

NUMERICAL INDEX OF PARTS

PART NO	PAGE	REF NO.
40173758	6	16
40173759	6	17
40173762	30	48
40173763	54	12
40173764	54	13
40173765	54	35
40173766	54	37
40173768	54	10
40173769	54	3
40173770	28	27
40173770	54	20
40173771	50	24
40173771	54	39
40173772	26	57
40173772	54	40
40173773	2	14
40173775	38	51
40173776	12	4
40173778	12	6
40173779	12	8
40173780	12	9
40173781	12	13
40173782	12	17
40173783	12	18
40173784	12	19
40173785	12	22
40173790	22	16
40173791	22	18
40173792	14	20
40173794	30	49
40173796	34	10
40173797	8	6
40173803	8	9
40173804	8	11
40173805	8	10
40173806	8	12
40173807	8	20
40173814	8	32
40173815	8	33
40173817	16	1
40173821	8	44
40173829	16	3
40173830	16	5
40173831	16	7
40173832	16	9

PART NO	PAGE	REF NO.
40173833	16	11
40173834	16	14
40173835	16	17
40173837	16	20
40173838	16	33
40173842	36	21
40173850	36	36
40173854	14	8
40173857	14	14
40173863	40	1
40173866	40	27
40173867	40	30
40173868	40	39
40173869	40	43
40173870	42	91
40173871	42	74
40173872	34	1
40173928	2	1
40173938	2	26
40173941	2	32
40173946	2	36
40173987	4	81
40173988	2	35
40173996	36	40
40173997	36	41
40173999	36	42
40174000	54	28
40174001	54	31
40174002	54	32
40174011	36	5
40174012	50	23
40174012	54	5
40174015	36	18
40174016	4	77·78
40174017	4	77·78
40174020	6	15
40174021	36	19
40174023	42	82
40174025	8	3
40174028	14	4
40174032	26	51
40174033	26	52
40174034	56	12
40174035	14	5
40174311	28	21

PART NO	PAGE	REF NO.
40174312	28	14
40174313	28	8
40174350	28	17
40174350	54	21
40186376	42	54
40186485	26	59
40186575	4	73·74
40186576	4	73·74
40186577	38	55
40186578	4	75
40186579	4	76
A1230500000A	6	37
B1110280000	50	37
B1157781000	24	28
B1212210D00	6	36
B1215552000	38	53
B1601210D0BA	8	36
B1837201SA0	22	21
B2702210000	30	54
B2703210000	30	55
B3041980000	50	35
B3118552H00	28	3
B3132012000	28	13
B3208280000	52	52
B3212761000	50	27
B3413227000	50	38
B8228125000	36	15
B9101490000	50	8
B91210120A0	50	7
B9143372000	50	5
BT0400251EB	20	70
BT0400251EB	28	41
BT0400251EB	32	10
BT0400251EB	56	4
BT0600401EB	56	5
BT0800501EB	56	6
CM300200001	40	86
CM300200001	42	86
CM500200001	6	4
CQ250000001	12	31
CS0640611SP	52	54
D1830560EA0	22	19
EA9002B1100	44	96
EA9500B0100	4	61
EA9500B0100	20	78

NUMERICAL INDEX OF PARTS

PART NO	PAGE	REF NO.
EA9500B0100	24	60
EA9500B0100	26	60
EA9500B0100	34	12
EA9500B0100	44	94
EA9500B0200	44	107
GAE030120A0	24	32
GAE03018000	24	30
GAE03020000	24	10
GAE03021000	24	7
GAE03022000	24	9
GAE03023000	24	5
GAE03025000	24	8
GAE03028000	24	16
GAE03032000	24	46
GAE030460A0	26	56
GAE040140A0	24	34
GAE04019000	24	15
GAE04027000	24	14
GAE04029000	24	17
GAE04038000	24	25
GAE04039000	24	24
GAF01007000	6	5
HA005820000	54	42
HX001230000	50	36
HX001500000	42	64
HX00150000A	4	67
HX00150000B	4	68
HX00150000C	4	59
HX00150000C	44	99
HX00150000D	26	53
HX00150000D	30	60
HX00150000D	44	100
HX00150000D	50	11
HX00150000F	18	27
HX00150000G	42	59
HX00150000H	4	69
HX00150000H	26	58
HX00150000K	2	12·13
HX00150000M	2	71
HX00150000M	4	71
HX00150000M	44	101
HX001890000	24	37
HX00285000A	24	23
HX00314000A	2	15
HX00314000A	34	13

PART NO	PAGE	REF NO.
HX004070000	44	95
MAO91003000	24	35
MDB1SFB0902	12	11
NM6030001SC	44	93
NM6030001SC	52	49
NM6040000SN	4	58
NM6040000SN	28	61
NM6040000SN	30	61
NM6040000SN	42	89
NM6040000SN	56	25
NM6040001SD	42	97
NM6040001SD	44	97
NM6050001SC	34	16
NM6050001SC	44	104
NM6050001SD	50	10
NM6050001SE	48	25
NM6050001SE	50	18
NM6050001SP	56	20
NS6110310SP	36	45
NS6110420SP	24	36
NS6110420SP	52	53
PA060200700	32	6
PA100153500	20	71
PA2005020A0	42	84
PF0252180A0	56	2
PF070001000	28	28
PJ210004600	42	72
PJ210008300	42	71
PJ210008400	42	69
PJ210008500	56	3
PJ301040302	20	72
PJ301040509	32	9
PJ303040007	56	10
PJ304040504	32	7
PJ304045102	42	85
PJ308040006	20	69
PJ308080006	56	9
PJ309040007	56	11
PJ3C1040502	28	35
PJ3C1040502	56	23
PJ3C8040002	56	8
PS0400082KP	40	45
PS0400142KH	6	6
PV010016000	56	1
PV015128000	42	70

PART NO	PAGE	REF NO.
PX055105000	42	73
RC0410415KP	28	15
RC1700001KP	28	5
RE0150000K0	24	6
RE0200000K0	26	47
RE0400000K0	28	25
RE0500000K0	28	20
RE0700000K0	42	83
RE1000000K0	6	7
RO029180100	38	52
RO044240100	12	15
RO098190100	6	8
SB130000600	6	26
SD0400201SD	26	48
SD0720221SP	50	40
SD0720222TP	50	39
SD0790204SP	24	33
SK1412001SD	42	63
SK2351601SE	34	15
SK3482501SE	40	18
SL4030591SC	50	45
SL4030681SC	24	26
SL4031281SC	50	43
SL4031481SC	50	44
SL6030592TN	36	17
SL6030892TN	20	60
SL6031492TN	18	30
SL6032092TN	20	73
SL6040842TN	20	64
SL6040892TN	18	75
SL6040892TN	20	75
SL6040892TN	28	58
SL6040892TN	30	58
SL6041092TN	18	12
SL6041292TN	20	68
SL6041492TN	20	62
SL6041492TN	28	59
SL6041492TN	30	59
SL6041692TN	28	30
SL6042042TN	18	38
SL6042092TN	18	18
SL6051292TN	40	5
SL6051492TN	42	87
SL6052092TN	16	32
SL6052092TN	18	10

NUMERICAL INDEX OF PARTS

PART NO	PAGE	REF NO.
SL6052092TN	36	9
SL6052092TN	40	17
SL6054592TN	18	32
SL6062542TN	16	30
SL6062542TN	18	24
SL6062592TN	16	10
SM0850801SC	24	44
SM1030800SM	20	77
SM1040801SC	40	15
SM1041601SC	40	11
SM1051201SC	44	103
SM1053001SP	44	106
SM3040652TN	18	55
SM3040652TN	20	55
SM3040652TN	40	26
SM3041052TN	18	58
SM3041052TN	20	58
SM4040555SP	2	44
SM4040601SC	2	39
SM4040655SP	4	60
SM4040655SP	26	54
SM4040855SP	4	70
SM4042501SC	44	108
SM4042555SP	56	16
SM4050501SC	28	36
SM4050601SC	50	22
SM4050655SP	36	43
SM4050801SC	52	56
SM4051405SE	48	24
SM4051455SP	56	19
SM6030600SN	32	5
SM6030650TP	18	14
SM6030802TP	16	29
SM6030802TP	18	26
SM6030802TP	34	6
SM6031002TN	28	6
SM6031602TP	32	4
SM6032002TN	42	92
SM6040450TP	50	13
SM6040600SP	50	12
SM6040652TP	42	80
SM6040802TP	2	42
SM6040802TP	8	14
SM6040802TP	18	47
SM6040802TP	20	47

PART NO	PAGE	REF NO.
SM6040802TP	34	4
SM6040802TP	42	98
SM6040802TP	44	98
SM6040860TP	30	56
SM6041002TP	26	55
SM6041202TP	18	4
SM6041202TP	28	38
SM6041202TP	56	24
SM6041602TP	42	78
SM6041802TP	32	3
SM6041802TP	42	88
SM6043002TN	56	14
SM6051202TP	40	55
SM6051202TP	42	55
SM8030312TP	30	50
SM8040412TP	30	53
SM8040612TP	28	2
SM80606A2TP	28	16
SM8060812TP	6	29
SM9040800SP	28	18
SQ1110451MZ	36	3
SQ2050453MZ	36	2
SS3060410SP	24	18
SS4080620TP	24	22
SS4121015SP	4	72
SS6080410SP	24	31
SS6151412TP	36	20
SS6152212SP	36	10
SS7060310SP	24	11
SS7060610SP	24	21
SS8090530TP	52	55
SS8660810TP	6	14
SS8660810TP	22	15
TA0620504R0	4	66
TA0850604R0	2	45
TA1250504R0	2	46
WP0280501SC	24	45
WP0371016SD	34	14
WP0410846SC	28	19
WP0430801SC	18	59
WP0430801SC	20	59
WP0431005SP	34	5
WP0450801SC	2	40
WP0450801SC	8	13
WP0450801SC	26	49

PART NO	PAGE	REF NO.
WP0450801SD	36	46
WP0450826SC	28	40
WP0450826SC	56	26
WP0460556SD	18	65
WP0460556SD	20	65
WP0501016SD	40	56
WP0501016SD	42	56
WP0510516SD	56	21
WP0531001SC	28	37
WP0531001SC	48	15
WP0531001SC	50	57
WP0531001SC	52	57
WP0551016SH	52	50
WP0621016SD	38	54
WP0641600SC	16	31
WP0641600SC	18	25
WP1602616SZ	50	25
WP1612616SE	48	22
WS0451040KP	52	51
WS0510002KN	48	14
WS0510002KN	50	20
WS0610002KP	36	11