AKE
Cutting & better

Catalogue 2019+

INNOVATION FOR YOUR SUCCESS.

AKE is a family-run, medium-sized company with international orientation. Our position offers decisive advantages to our customers. They meet the versatility and competence of a big company and take advantage of the promptness and flexibility of a small firm. Our specialisation, the proverbial precision, the innovative approach and a huge wealth of experience help our customers to gain the top.

For more than 50 years AKE has been standing for highest quality in industry and crafts. AKE today – is one of the leading manufacturers of circular saw blades and cutting tools worldwide.

Whether individual tools or demanding standards are required: the solution is always AKE.

„Think global - act local“

The company of great tradition - AKE

Price groups in this catalogue
01
02
03

Content

Catalogue 2019+

Products	Page
Introduction	2-5
Circular saw blades	6-151
DP-Tools	152-193
Hoggers	194-211
Shank type cutters	212-265
Cutters with bore	266-295
Drills	296-327
Knives	328-361
Clamping systems	362-391
Accessories	392-407

Innovation and Experience for our customers‘ success

AKE - your company of great tradition

This is what AKE can do:

Any product can only be just as good, as the people behind it. AKE is exceedingly skilled at manufacturing circular saw blades and cutting tools as much as hardly anyone else. The know-how is deeply rooted and at no point ever handed over – a guarantee for highest quality. Setting a high standard for industry, crafts and ambitious do-it-yourselfers is just one thing. AKE does, however, proceed one step further: We are elaborating individually adjusted solutions together with our customers.

Highest Quality

... from production to precision tool.

Focused knowledge for optimal solutions

When a tool is created at AKE its complete history can be traced at our plant, from raw material to high-tech tool. We do hold our quality „in our hands“ in the true sense of the word and are thus in the position to offer unique solutions to our customers thanks to a special team of application engineers, if the high standards we set should be insufficient.

Always a perfect cutting result
Wood, metal, plastic material and composite materials

Hard to believe which types of material have already been cut with saw blades and tools of AKE. Yet, the customers’ demand has always been the same: best results with highest efficiency. At AKE this is completed with individual advice, competent application engineering and our internal grinding and repair service.

The detail makes the difference
Latest technology for highest precision

True running, sharp edges and a long service life are the main demands placed on a tool. However, it is not apparent which efforts are to be made to produce such a high quality tool that meets the demands.Yet you do experience the difference in practice. AKE-products meet the demands under hardest conditions in industry and always pay due to their high reliability.

“Think global - act local”
AKE - your company of great tradition

This is AKE:

For more than 50 years AKE has been standing for highest quality in industry and crafts. AKE today – is one of the leading manufacturers of circular saw blades and cutting tools worldwide. AKE is a family-run, medium-sized company with international orientation. Our position offers decisive advantages to our customers. They meet the versatility and competence of a big company and take advantage of the promptness and flexibility of a small firm. Our specialisation, the proverbial precision, the innovative approach and a huge wealth of experience help our customers to gain the top.

Whether individual tools or demanding standards are required: the solution is always AKE.

Head office Balingen (Baden-Württemberg)

Cutting & better
More than just a clean cut

We don’t leave our customers alone with a product. Maximum satisfaction is achieved by means of intensive communication and the resulting profound understanding for each other. The endeavour to always give the best for the customer and be that famous little bit better is expressed in Cutting & better.
For the customers this means „feel better“ and „be better“ with AKE.

Innovation as a key success factor
With Cutting 2.0 AKE „re-invents“ sawing

reddot award 2014 honourable mention

Hauptpreis VR-InnovationsPreis Mittelstand 2014

1. Platz WOODEX INNOVATIONSPREIS 2013

1. Platz LIGNA INNOVATIONSPREIS 2013

It is the revolutionary approach to the mode of cutting that makes Cutting 2.0 so very special. All relevant products, whether the ***SuperSilent*** and the ***panel sizing saw blade 2.0*** or the ***cutting tools Z3*** and ***Harmony***, have one thing in common: The applied cutting methods are completely different. To this end the tool design had been revised fundamentally in order to avoid multiple chipping. In doing so we have always one end in mind: Creating unique advantages for our customers.

2013
SuperSilent

2015
DP jointing-rebating cutter HARMONY 2.0

2015
DP shank cutter Z3

2016
Panel sizing saw blade 2.0

AKE Knebel
GmbH & Co. KG
Hölzlestraße 14 + 16
72336 Balingen, Germany

P.O. Box 10 05 63
D-72305 Balingen
Phone: +49 (0) 7433 | 261-0
Fax: +49 (0) 7433 | 261-100
E-mail: info@ake.de
Website: www.ake.de

AKE Knebel
GmbH & Co. KG
Branch office Rietberg
Konrad-Adenauer-Straße 32
33397 Rietberg, Germany

Phone: +49 (0) 5244 | 9 20 20
Fax: +49 (0) 5244 | 9 20 280
E-mail: info@ake.de
Website: www.ake.de

AKE Knebel
GmbH & Co. KG
Branch office Prien
Am Mühlbach 6
83209 Prien, Germany

Phone: +49 (0) 8051 | 96 56 78 0
Fax: +49 (0) 8051 | 96 56 78 19
E-mail: info@ake.de
Website: www.ake.de

AKE partners - worldwide

Australia
Salestech Pty Ltd
13/148 Chesterville Road
AUS - Moorabbin, 3189 Victoria
Phone: +61 (03) 95 53 18 83
Fax: +61 (03) 95 53 62 68
E-mail: sales@akesalestech.com.au

Belgium
Maes Jonker
Lodewijk de Raetlaan 41
B-8870 Izegem
Phone: +32 (51) 31 73 20
Fax: +32 (51) 31 76 02
E-mail: info@maesjonker.eu
Website: www.maesjonker.eu

Bosnia Herzegovina
Techwork d.o.o.
Rostovska b.b.
BA-70230 Bugojno
Phone: +387-30 250 095
Fax: +387-30 250 773
E-mail: info@techwork.ba
Website: www.ake.de

Bulgaria
ROSI Ltd.
Promishlena 43 Str., kv. Industrialen
6000 Stara Zagora
Phone: +359 42/660 -773
Fax: +359 42/640 296
E-mail: rosi@rosi.bg
Website: www.rosi.bg

Canada
NAP Gladu
2115 Rue St-Césaire
CDN-Marieville, QC J3M 1E5
Phone: +1 (450) 4 60 44 81
Fax: +1 (450) 4 60 26 55
E-mail: gladu@napgladu.com
Website: www.napgladu.com

Chile
Ingemad
Ingeniería de Maderas Com. e Ind. Ltda.
Av. Einstein 716 – Recoleta
C.P. 8431554 Santiago
Phone: +562 2622 53 33
Fax: +562 2622 52 10
E-mail: info@ingemad.cl
Website: www.ingemad.cl

China
AKE Precision Tooling
(TaiCang) Co. Ltd.
1st Floor, Building 2, Hongliang Industry Park
1st Outer Ring Road
215400 TaiCang, JiangSu Province
P.R. China
Phone: +86 (0) 5 12 53 18 51 51
Fax: +86 (0) 5 12 53 18 50 50
E-mail: info@aketools.com
Website: www.aketools.com

Estonia
Instreita UAB
Jono Zemaicio g. 10
77174 Siauliai
Phone: +370 (41) 545 157
Fax: +370 (41) 545 158
Website: www.ake.de

Finland
Lahden Teräteos Oy
Yhdyskatu 35
15200 Lahti
Phone: +03 8733 100
Fax: +03 8733 150
E-mail: ltt@lahdenterateos.fi
Website: www.lahdenterateos.fi

France
AKE France
B.P. 228 ZI Nord
27, Rue de l'Industrie
F-67406 Illkirch-Cedex
Phone: +33 (388) 67 47 10
Fax: +33 (388) 67 40 31
E-mail: ake-france@ake.de
Website: www.ake.de

Great Britain
Allied Tooling Ltd.
Unit 2, 19 Willis Way
Poole, Dorset
BH15 3SS, GB
Phone: +44 (0) 1202 67 57 67
Fax: +49 (0) 1202 68 44 22
E-mail: sales@alliedtooling.com
Website: www.alliedtooling.com

India
Shreepal Green Futures Pvt Ltd.
5, Kamala Arcade , Sector 30
Gothivali, Plot No A 3+4, Rabale West
New Mumbai -400701
Maharashtra
Phone: +91 7208016114
Fax: +91 7208016115
E-mail: info@shreepal.in

Indonesia
AKE Prima Sejahtera
Jalan Agung Utara 1 Blok A2 No.27
Jakarta Utara 14350
Phone: +62 (21) 64 71 78 50 /78 51
Fax: +62 (21) 64 71 78 52
E-mail: akeps@cdn.net.id

Italy
Howema Italia s.r.l.
Via Papa Giovanni XXIII, 3B
I-47034 Forlimpopoli (FC)
Phone: +390 (543) 78 28 48
Fax: +390 (543) 78 28 49
E-mail: info@howemaitalia.com
Website: www.howemaitalia.com

Colombia
Eurosierras S.A.S
CRA 44A 31-112 Sector Almacentro
050015 Medellín, Colombia
Phone: +574 322 9108
Website: www.eurosierras.com

Croatia
Techwork d.o.o.
Rostovska b.b.
BA-70230 Bugojno
Phone: +387-30 250 095
Fax: +387-30 250 773
E-mail: info@techwork.ba
Website: www.ake.de

Latvia
Instreita UAB
Jono Zemaicio g. 10
77174 Siauliai
Phone: +370 (41) 545 157
Fax: +370 (41) 545 158
Website: www.ake.de

Lebanon
Machines Accessories & Parts International
Ground Floor, Section#5, Baaklini Center,
New Rawda Industrial Area, Lebanon
Mobil: +961 39 98 088
E-mail: sales@map-int.net
Website: www.map-int.net

Lithuania
Instreita UAB
Jono Zemaicio g. 10
77174 Siauliai
Phone: +370 (41) 545 157
Fax: +370 (41) 545 158
Website: www.ake.de

Malaysia
AKE Wood-Tech Sdn Bhd
No.5, Jalan Taming 2A
Taming Jaya Industrial Park
MAL-43300 Balakong,
Selangor Darul Ehsan
Phone: +603 (8962) 19 98
Fax: +603 (8962) 29 98
E-mail: info@woodtech.com.my
Website: www.woodtech.com.my

Netherlands
Trasco B.V.
Heusing 15
NL-4817 ZB Breda
Phone: +31 (76) 30 30 320
Fax: +31 (76) 58 11 962
E-mail: info@trasco.nl

Norway
Sandsje-Hvitsten AS
Lillevarskogen 6
N-3160 Stokke
Phone: +47 (3333) 54 88
Fax: +47 (3333) 54 81
E-mail: magne@shv.no
Website: www.shv.no

Austria
SPERL Werkzeugtechnik GmbH & Co. KG
Kaplanstraße 11
4600 Wels
Phone: +43 (7242) 42812
Fax: +43 (7242) 42845
E-mail: office@sperl-werkzeugtechnik.at
Website: www.sperl-werkzeugtechnik.at

Peru
VITEMAQ EIRL
Jr Los Damascos,
- Resid. Monterrico 215
La Molina - Lima 12
Phone: +51 (1) 4366510
Fax: +51 (1) 4366510
E-mail: info@vitemaq.com
Website: www.vitemaq.com

Poland
AKE Polska Sp. zo.o.
PL-98400 Wieruszów
ul. Witosa 7
Phone: +48 (62) 7 83 22 00
Fax: +48 (62) 7 83 22 01
E-mail: ake@ake.pl

Rumänien
S. C. AKE Tools S. R. L.
RO-440122 Satu Mare
Str. Aurel Vlaicu Nr. 72
Phone: +40 (261) 71 55 42
Fax: +40 (261) 71 55 60
E-mail: akeromania@ake.biz

Russia
AKE RUS
Polustrovsky Avenue 28-Zh, office 18
195197 St.Petersburg
Phone: +7 (812) 347-84-90
Fax: +7 (812) 347-84-94
E-mail: info@ake-rus.ru
Website: www.ake-rus.ru

Sweden
Sollefteå Slipservice AB
Västerstrinne 217
SE-881 92 Sollefteå
Phone: +46 (0) 62057110
Fax: + 46 (0) 62057119
E-mail: info@slipservice.com
Website: www.slipservice.com

Switzerland
Sigrist & Müller AG
Werkzeug- und Maschinenfabrik
Postfach
CH-8197 Rafz
Phone: +41 (43) 4 33 30 80
Fax: +41 (43) 4 33 30 90
E-mail: info@saturn-rafz.ch
Website: www.saturn-rafz.ch

Serbia
AKE-Djantar d. o. o.
RS-24300 Backa Topola
Glavna 60
Phone: +381 (24) 71 58 49
Fax: +381 (24) 71 58 49
E-mail: ake@ake-djantar.com

Slovakia
AKE Slovensko s.r.o.
nam.Priatelstva 39B/5541
SK-92901 Dunajská Streda
Phone: +42 (1) 3 15 50 59 01
Fax: +42 (1) 3 15 50 59 02
E-mail: info@ake.sk

Slovenia
Techwork d.o.o.
Rostovska b.b.
BA-70230 Bugojno
Phone: +387-30 250 095
Fax: +387-30 250 773
E-mail: info@techwork.ba
Website: www.ake.de

Spain
VAIFER HERRAMIENTAS Y AFILADOS S.L.
C/Uzbina 24, Pabellon C-7
01015 VITORIA-Gasteiz
Phone: +34 945 122 999
Fax: +34 945 123 341
E-mail: vaifer@vaifer.com
Website: www.vaifer.com

South Africa
Nukor Sawmilling (PTY) LTD
P.O. Box 34567
Jeppestown 2043, South Africa
Primary Industry
Phone: +27 11 610 2000
Fax: +27 11 610 2020
E-mail: sawmilling@nukor.co.za
Website: www.nukor.co.za

Thailand
AKE Technology Co. Ltd.
232 Soi Sathupradit
57 Sathupradit Road
Yannawa Bang-Pong-Pang
BANGKOK, 10120
Phone: 066 22 94 07 57
Fax: 066 22 95 30 73

THAI NAGOYA Machinery CO. LTD
661/8-9 Sathupradit Rd.,
Bangpongpang, Yannawa
BANGKOK, THAILAND
Phone: (662) 6820220-3, 2940757
Fax: (662) 28 41 233
E-mail: thainagoya@hotmail.com

Czech Republic
AKE CZ s.r.o.
Druzstevni 104
CZ-27341 Cvrcovice
Phone: +420 (728) 873 546
E-mail: info@ake.cz
Website: www.ake.cz

Hungary
AKE Hungária Kft.
H-9700 Szombathely
Vásártér u. 12.
Phone: +36 (30) 30 30 520
Fax: +36 (94) 51 32 99
E-mail: akehungaria@ake.hu
Website: www.ake.hu

USA
NAP Gladu
1180 Wernsing Road
USA-Jasper, IN 47546
Phone: +1 (800) 45 77 468
Fax: +1 (800) 45 77 458
E-mail: sales@napgladu.com
Website: www.napgladu.com

United Arab Emirates
Wood Working World (FZE)
Q3 Warehouse 099
P.O. Box: 7813 Sharjah, UAE
Sharjah Airport International Free zone
Sharjah, United Arab Emirates
Phone: +97 1 65 772 571
Mobile: +97 1 50 2 658 388
Fax: +97 1 65 772 571
E-mail: sales@wow-mea.com
Website: www.wow-mea.com

Belarus
OOO „ARKalmaz“
ul. Gerasimovicha 1
230011 Grodno, Belarus
Phone: +375 152 526691
Fax: +375 152 526691
E-mail: almaz-grodno@mail.ru
Website: www.arkalmaz.by

Circular saw blades

Content

Circular saw blades

Products | Page

Technical information 8-9

Solid wood - Circular saw blades 10-22

Panel sizing saw blades acc. to machines 23-39

Panel sizing saw blades 40-65

Scoring - Circular saw blades 66-71

Universal - Circular saw blades. 72-81

Plastic material - Circular saw blades.....82

Sizing - Circular saw blades 83-88

Spare - Circular saw blades 89-93

Circular saw blades for edge banders 94-95

Circular saw blades for CNC machines / BAZ..... 96-97

Aluminium - Circular saw blades 98-105

Circular saw blades for notching and glass ledges 106-107

Steel - Circular saw blades..... 108-109

Circular saw blades for portable saws.....110-112

Grooving circular saw blades 113-115

Grooving cutters 116

Adjustable grooving cutters 117

Accessories 118-120

Circular saw blades acc. to diameter..... 121-151

Table for cutting speeds
Circular saw blades

Material Group	Cutting Materials	Cutting speeds v_c = m/sec	Feed rate / tooth f_z = mm/Z
Wood and wood-based material	**Veneer**	70 - 100	0,3 - 0,7
	Veneered panels	60 - 90	0,2
	Beaver board	50 - 80	0,15
	Hard wood, exotic, longitudinal	60 - 100	0,3 - 1,0
	HDF (high density fiber board)	60 - 80	0,1 - 0,3
	MDF (medium density fiber board)	60 - 80	0,1 - 0,3
	OSB (oriented strand board)	60 - 80	0,1 - 0,2
	Lumber-core plywood	40 - 65	0,02 - 0,06
	Chipboard, raw	60 - 80	0,3
	Chipboard, plastic coated	60 - 80	0,15
	Plywood, laminated layers	50 - 80	0,05 - 0,25
	Plywood (lumber-core, rod-shaped)	60 - 80	0,1 - 0,2
	Softboard	60 - 100	0,2 - 0,4
	Soft wood, longitudinal	60 - 100	0,5 - 3,0
	Soft wood, cross cut	60 - 100	0,2 - 0,4
Plastic material	**Duroplast**	60 - 70	0,02 - 0,05
	Elastomer	50 - 65	0,01 - 0,03
	HPL (High-Pressure-Laminate) Trespa®, Resopal®	50 - 70	0,01 - 0,08
	Mineral material Corian®, Noblan®, Hi-Macs®, Staron®, Rausolid®	50 - 70	0,02 - 0,04
	Thermoplastic	50 - 65	0,05 - 0,10
Metal	**Al wrought alloy** AlMn $AlMn_1Cu$ [3003] AlMg $AlMg_2$ [5251] AlCuMg $AlZnMg_3Cu$ [7022]	2000 - 4800 m/min 2000 - 4000 m/min	0,005 - 0,03 0,02 - 0,07
	Al die-casting alloy $AlMg_3$ [51300], $AlMg_5Si$ [51400]	2000 - 4000 m/min	0,005 - 0,03 0,02 - 0,07
	Al die-casting alloy Si $AlSi_{12}$	2000 - 2500 m/min	0,01 - 0,05
	Mg wrought alloy $MgMn_2$ [3.3520], $MgAl_3Zn$ [3.5312]	2000 - 3500 m/min	0,005 - 0,02 0,01 - 0,05
	Mg die-casting alloy Cu58	2000 - 3500 m/min 2000 - 3000 m/min	0,005 - 0,02 0,01 - 0,05
	Copper CuZn40Pb, CuZn30	400 - 800 m/min	0,01 0,03 - 0,05
	Brass $CuSn_6$, $CuSn_6Zn$	400 - 800 m/min	0,01 0,03 - 0,05
	Bronze $CuSn_6$, $CuSn_6Zn$	200 - 400 m/min	0,01 - 0,02 0,04 - 0,08
Others	**Fibre cement boards**	20 - 40	0,01 - 0,03
	Sandwich-type plaster boards	40 - 65	0,05 - 0,20
	Printed circuit boards	45 - 65	0,01 - 0,03
	Perlit fire protection board	40 - 60	0,05 - 0,20
	Rockwool	20 - 45	0,07 - 0,15

Diagram for cutting speed
Circular saw blades

The scale shows a guideline of cutting speeds for HW saw blades in relation to the processed material. When defining the cutting speed range for composite materials the most difficult material always has to be chosen for definition. On average chip removals (f_z) of 0,075 mm should be chosen for larger cutting heights and 0,15 mm for smaller cutting heights.

cutting speed

$$v_c = \frac{D \cdot \pi \cdot n}{60 \cdot 1000} \text{ (m/s)}$$

feed per tooth

$$f_z = \frac{v_f \cdot 1000}{n \cdot Z} \text{ (mm/Z)}$$

v_c = cutting speed [m/sec]

D = saw blade bore [mm]

n = speed [min^{-1}]

f_z = feed per tooth [mm/z]

v_f = feed speed [m/min]

Z = number of teeth

The maximally admissible rpms (n) up to ... given on the tools, may under no circumstances be exceeded! They mark the safety limit. They are not identical with the rpm providing the best possible economic efficiency.

D mm \ Speed n (^{1}/min)	1500	2000	2500	2850	3000	4000	4500	5000	5600	6000	8000	9000	10000	12000	18000
50	4	5	7	7,5	8	11	12	14	14,5	16	22	24	28	32	48
60	5	6	8	9	10	13	14	16	17,5	20	26	28	32	40	56
70	5,5	7	9	10,5	11	15	16,5	18	20,5	22	30	33	36	44	66
80	6,5	8,5	10,5	12	13	17	191	21	23,5	26	34	38	42	52	76
90	7	9,5	12	13,5	14	19	21	24	26,5	28	38	42	48	56	84
100	8	10,5	13	15	16	21	24	26	29	32	42	48	52	54	96
120	9,5	13	16	18	19	26	28	32	35	38	52	56	64	76	112
125	10	13,5	16,5	18,5	19,5	27	29	33	36,5	39	54	59	66	78	118
140	11	15	18	21	22	30	33	36	41	44	60	66	72	88	132
150	12	15,5	19,5	22,5	23,5	31,5	33,5	39	44	47	63	70,5	78,5	94,5	141,5
160	13	17	21	24	26	34	38	42	47	52	67	76	84	104	152
180	14	19	24	27	28	38	42,5	48	53	56	76	85	96	118	170
200	16	21	26	30	32	42	47	52	58,5	64	84	94	104	128	188
225	18	24	30	33,5	36	48	58	60	66	72	96	106	120	144	212
250	20	26	33	37	40	52	59	66	72,5	80	104	118	132	160	236
300	24	31,5	40	45	48	63	71	80	88	96	126	142	160	192	284
350	28	36,5	47	52	56	73	83	94	105	112	146	166	188	224	332
400	32	42	54	60	64	84	94	108	117	128	168	188	216	256	376
450	35,5	47	59	67,5	70,5	94,5	106	118	132	141,6	188	211	236	283	424
500	40	53	67	74,5	80	106	118	134	146,5	160	212	236	268	320	472

Mineral fibre plates

Non-ferrous metal / Wood-based material / Plastic material

Natural wood (hard)

Natural wood (soft)

Safety limit

Circular saw blade for solid wood
Technical information

	Mustang Standard	**Mustang** Standard	**Mustang** Optimal
Design	Saw body with two open HW-tipped strobes	Saw body with three open HW-tipped strobes	Saw body with open and closed HW-tipped strobes
Material			
	Solid wood - soft and hard - naturally moist and wet	Solid wood - soft and hard - naturally moist and wet	Solid wood - soft and hard - naturally moist and wet
Application	Longitudinal cut - up to max. 100 mm cutting height	Longitudinal cut - up to max. 100 mm cutting height	Longitudinal cut - up to max. 150 mm cutting height

Further information:
ake.de/en/mustang

Circular saw blade for solid wood
Technical information

Mustang Perfekt	**Mustang** Super	**Mustang** Extra	
Saw body with closed HW-tipped strobes, chip-thickness limited design (SDB)	Rigid saw body with closed HW-tipped strobes, chip-thickness limited design (SDB), large thooth overhang	Saw body with closed HW-tipped strobes, thin kerf	**Design**
			Material
Solid wood - soft and hard - dry or naturally wet	Solid wood - soft and hard	Solid wood - soft and hard - dry	
Longitudinal and cross cut	Longitudinal cut	Longitudinal cut	**Application**

0001 Solid wood - Circular saw blades
Cross cut

Application:	Cross cuts, top shaft through-feed machine
Material:	Solid wood
Machine:	Pendulum saw and radial cut-off saw
Design:	Rigid saw body, noise reduced • = with copper plugs
Tooth:	Alternate top bevel tooth negative (W, neg.), HW
Feed:	MAN / MEC

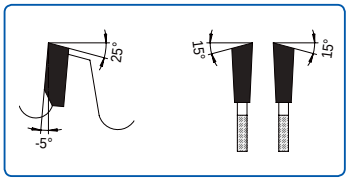

	D mm	B mm	b mm	d mm	NL mm	Z	Tooth shape	Order No.	Price [PG 01]
•	350	4,40	2,80	30	NLK	42	W, neg.	0001.350.30	
•	400	4,40	2,80	30	NLK	48	W, neg.	0001.400.30	
•	450	4,40	2,80	30	NLK	54	W, neg.	0001.450.30	
•	500	4,40	2,80	30	NLK	60	W, neg.	0001.500.30	
•	520	4,40	2,80	30	NLK	60	W, neg.	0001.520.30	
•	550	4,80	3,20	30	NLK	72	W, neg.	0001.550.30	
•	600	5,20	3,60	30	NLK	72	W, neg.	0001.600.30	

0003 Solid wood - Circular saw blades

Chipping and profiling segments

Application:	Profiling, longitudinal cut
Material:	Solid wood
Machine:	Profiling line
Design:	Specified by machine manufacturer
Tooth:	Flat tooth (F), HW
Feed:	MEC

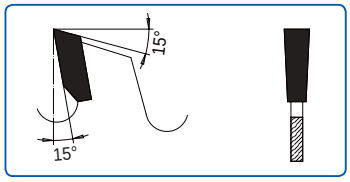

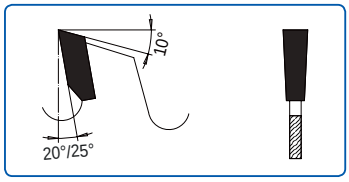

D mm	B mm	b mm	b_1 mm	d mm	Z	Tooth shape	Type	Rhs / Lhs	Order No.	Price [PG 01]
401	3,50	2,50	8,00	200,4	10	F	VPS 28-052 A	lhs	0003.401.01	
401	3,50	2,50	8,00	200,4	10	F	VPS 28-053 A	rhs	0003.401.02	
415	3,50	2,50	8,00	210	11	F	VP 48-08-075	lhs	0003.415.01	
415	3,50	2,50	8,00	210	11	F	VP 48-08-076	rhs	0003.415.02	
555	5,80	5,00		450	19	F	218 954	lhs, rhs	0003.555.10	
555	6,20	5,00		450	19	F	218 954	lhs, rhs	0003.555.11	

Further dimensions are available on request

0004 MUSTANG STANDARD
Longitudinal cut

Application:	Longitudinal cut, up to 100 mm cutting height
Material:	Solid wood soft and hard, naturally moist and wet
Machine:	Multi-rip saw single-shaft, double shaft, splitting machine
Design:	Saw body with two or three open HW-tipped strobes
Tooth:	Flat tooth (F), HW
Feed:	MEC

Further information:
ake.de/en/mustang

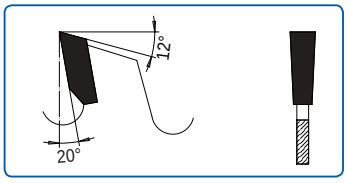

D mm	B mm	b mm	d mm	FLD max mm	KN mm	Z / RS	Tooth shape	Order No.	Price [PG 01]
225	2,00	1,40	30-80	120		20 + 2	F	0004.225.30	
225	2,00	1,40	70	120	2/20x5	20 + 2	F	0004.225.70	
225	2,80	2,00	30-80	120		20 + 2	F	0004.225.31	
225	2,80	2,00	70	120	2/20x5	20 + 2	F	0004.225.71	
225	4,00	3,00	30-80	115		28 + 2	F	0004.225.72	
250	2,80	2,00	30-86	130		16 + 2	F	0004.250.31	
250	3,40	2,20	30-86	130		16 + 2	F	0004.250.30	
250	3,40	2,20	30-86	130		18 + 2	F	0004.256.30	
250	2,80	2,00	60	120		20 + 2	F	0004.250.60	
250	3,20	2,20	30	120		24 + 2	F	0004.254.30	
250	3,20	2,20	60	120		24 + 2	F	0004.254.60	
250	4,00	3,00	40	125	2/10x5,5	24 + 2	F	0004.250.42	
250	6,00	4,40	40	125	2/10x5,5	24 + 2	F	0004.250.43	
250	3,00	2,00	30-80	120		28 + 2	F, SDB	0004.250.03	
250	2,00	1,40	80	145	2/20x5	30 + 2	F, SDB	0004.250.02	
250	2,60	1,80	80	135	2/20x5	30 + 2	F, SDB	0004.250.80	
260	3,40	2,20	30-80	115		20 + 2	F	0004.260.30	
280	3,40	2,20	80	130	2/13x5	20 + 2	F	0004.280.80	
300	3,40	2,20	30-96	140		18 + 2	F	0004.304.30	
300	3,40	2,20	70	140	2/20x5	18 + 2	F	0004.301.70	
300	3,40	2,20	30-96	130		18 + 3	F	0004.300.30	
300	3,40	2,20	70	130	2/20x5	18 + 3	F	0004.300.70	
300	3,40	2,20	30-96	140		22 + 2	F	0004.307.30	
300	3,40	2,20	70	140	2/20x5	22 + 2	F	0004.307.70	
320	3,40	2,20	30-105	150		20 + 2	F	0004.321.30	
350	3,80	2,40	30-105	190		24 + 3	F	0004.350.30	
350	3,80	2,40	70	190	2/20x5	24 + 3	F	0004.350.70	
400	4,20	2,80	30-105	200		24 + 3	F	0004.400.30	

Bore and keyway dimension according to machine type. Please use data sheet

0004 MUSTANG OPTIMAL
Longitudinal cut

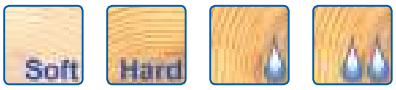

Application:	Longitudinal cut, up to 150 mm cutting height
Material:	Solid wood soft and hard, naturally moist and wet
Machine:	Multi-rip saw single-shaft, double shaft trimming machines
Design:	Saw body with open and closed HW-tipped strobes
Tooth:	Flat tooth (F), Alternate top bevel tooth (W), HW
Feed:	MEC

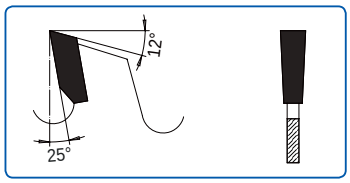

Fig.: Flat tooth (F)

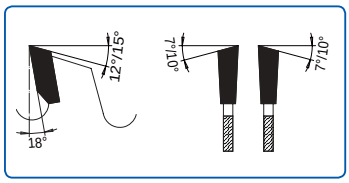

Fig.: Alternate top bevel tooth (W)

D mm	B mm	b mm	d mm	FLD max mm	KN mm	Machine	Z / RS	Tooth shape	Order No.	Price [PG 01]
210	3,40	2,40	60	90	2/14,5x5,5	Paul	24 + 2	F	0004.210.60	
250	3,60	2,40	75	110	2/16,5x5,5	Paul	20 + 2	F	0004.250.75	
250	3,60	2,40	75	110	2/16,5x5,5	Paul	24 + 2	F	0004.251.75	
300	3,40	2,20	30-100	120			20 + 2 + 2	F	0004.302.00	
300	3,40	2,20	80	120	2/13x5	Costa	20 + 2 + 2	F	0004.302.80	
300	4,00	2,80	30-100	130			20 + 2 + 2	F	0004.306.00	
300	4,00	2,80	75	120	2/16,5x5,5	Paul	20 + 2 + 2	F	0004.300.75	
300	3,40	2,20	30-100	130			28 + 2 + 2	F, SDB	0004.300.01	
320	3,40	2,20	30-100	135			20 + 2 + 2	F	0004.322.00	
320	4,20	2,80	30-100	135			20 + 2 + 2	F	0004.326.00	
350	3,60	2,40	30-100	140			20 + 2 + 2	F	0004.352.00	
350	4,20	2,80	30-100	140			20 + 2 + 2	F	0004.356.00	
350	4,20	2,80	75	120	2/16,5x5,5	Paul	20 + 2 + 2	F	0004.350.75	
350	3,60	2,40	30-100	140			28 + 2 + 2	F	0004.350.01	
380	3,60	2,40	30-105	150			20 + 2 + 2	F	0004.382.00	
380	4,20	2,80	30-105	150			20 + 2 + 2	F	0004.386.00	
380	4,60	3,00	75	120	2/16,5x5,5	Paul	20 + 2 + 2	F	0004.380.75	
400	4,20	2,80	30-110	160			20 + 2 + 2	F	0004.402.00	
425	4,20	2,80	30-105	150			20 + 2 + 2	F	0004.422.00	
450	4,60	3,20	30-110	160			20 + 2 + 2	F	0004.452.00	
500	4,80	3,40	30-140	180			24 + 2 + 2	F	0004.502.00	
500	5,60	4,00	140	190	8/10/165	EWD	54 + 2 + 2	W	0004.500.01	
500	5,80	4,00	140	190	8/10/165	EWD	60 + 2 + 2	W	0004.500.02	
550	4,80	3,40	30-150	190			24 + 2 + 2 + 2	F	0004.550.00	

Bore and keyway dimension according to machine type. Please use data sheet

0004 MUSTANG EXTRA
Longitudinal cut

Application:	Longitudinal cut
Material:	Solid wood soft and hard, dry
Machine:	Multi-rip saw, splitting saw
Design:	Saw body with closed HW-tipped strobes, thin kerf
Tooth:	Flat tooth (F), triple-chip tooth (T), HW
Feed:	MEC

Further information:
ake.de/en/mustang

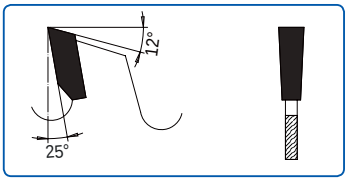

Fig.: Flat tooth (F)

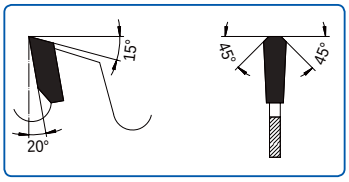

Fig.: Triple-chip tooth (T)

D mm	B mm	b mm	d mm	FLD max mm	NL mm	Z / RS	Tooth shape	Order No.	Price [PG 01]
200	2,40	1,60	30	80		16 + 2	F	0004.200.30	
250	2,00	1,40	40	130	2/10x5,5	24 + 3	T	0004.250.40	
300	2,40	1,60	60	130		27 + 3	T	0004.300.60	

0004 MUSTANG PERFEKT

Longitudinal cut and cross cut

Fig. Flat tooth, SDB

Fig. Alternate top bevel tooth

Application:	For cross cut (alternate top bevel tooth) For longitudinal cut (flat tooth and alternate top bevel tooth)
Material:	Solid wood soft and hard, dry or naturally wet
Machine:	Multi-rip saw, jointing machine, sizing saw
Design:	Saw body with closed HW-tipped strobes, chip-thickness limited design (SDB)
Tooth:	Flat tooth (F), alternate top bevel tooth (W), HW
Feed:	MAN / MEC

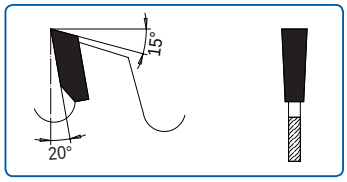

Fig.: Flat tooth (F)

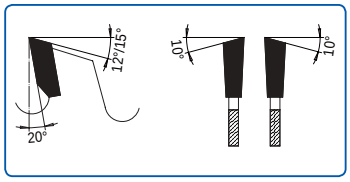

Fig.: Alternate top bevel tooth (W)

D mm	B mm	b mm	d mm	FLD max mm	NL mm	Machine	Z / RS	Tooth shape	Order No.	Price [PG 01]
300	3,40	2,20	30	120	NLK		24 + 3	W	0004.301.30	
350	3,60	2,40	30	140	NLK		16 + 4	F, SDB	0004.351.31	
350	3,60	2,40	30	140	NLK		30 + 3	W	0004.351.30	
400	4,20	2,80	30	180	NLK		20 + 4	F, SDB	0004.401.31	
400	4,20	2,80	30	180	NLK		30 + 3	W	0004.401.30	
450	4,20	2,80	30	150	NLK		28 + 4	F, SDB	0004.450.31	
450	4,20	2,80	30	180	NLK		36 + 4	W	0004.451.30	
500	4,20	2,80	30	190	NLK		32 + 4	F, SDB	0004.500.31	
550	5,40	3,60	30	200	NLK		30 + 2 + 2	F, SDB	0004.550.31	
NEW 555	5,20	3,60	55	135	6/6,6/75	Weinmann	54 + 2 + 2	W	0004.555.55	
640	5,40	3,60	30	200	NLK	Mafell	36 + 2 + 2	F, SDB	0004.640.31	
735	6,00	4,40	30	200	2/8,5/90	Handegger	48 + 2 + 2	W, SDB	0004.735.30	
750	6,50	4,50	40	300	2/10,5/60	Schneider	48 + 2 + 2	W, SDB	0004.750.40	
800	6,00	4,40	30		2/14/400 4/8,3/90	Handegger	48 + 2 + 2 + 2	W	0004.800.30	

Further dimensions for jointing machines see type 0014 on page 76

0004 MUSTANG SUPER
Longitudinal cut

Application:	Longitudinal cut
Material:	Solid wood soft and hard
Machine:	Multi-rip saw, trimming machine
Design:	Rigid saw body with closed T.C.-tipped strobes, chip-thickness limited design (SDB), large tooth overhang
Tooth:	Flat tooth (F), HW
Feed:	MAN / MEC

Further information:
ake.de/en/mustang

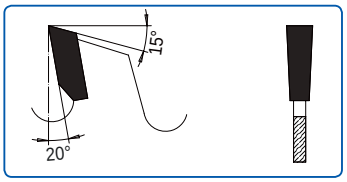

Fig.: Flat tooth (F)

D mm	B mm	b mm	d mm	FLD max mm	KN mm	Z / RS	Tooth shape	Order No.	Price [PG 01]
250	4,40	2,80	30	95		18 + 3	F, SDB	0004.253.30	
300	4,40	2,80	30	145		20 + 4	F, SDB	0004.303.30	
300	4,40	2,80	70	145	2/20x5	20 + 4	F, SDB	0004.303.70	
300	4,40	2,80	75	145	2/17x6	20 + 4	F, SDB	0004.303.75	
300	4,40	2,80	86	145	1/18x7	20 + 4	F, SDB	0004.303.86	
350	5,40	3,40	30-105	150		24 + 4	F, SDB	0004.353.30	
400	5,40	3,40	30-105	185		28 + 4	F, SDB	0004.403.30	

Bore and keyway dimension according to machine type; please use data sheet

0005 Solid wood processing
Longitudinal cut, thin-kerf design

Oxide coated

Your benefits at a glance:

- Minimised cutting width
- Improved cutting quality
- Economical benefit

Application:	Longitudinal cut
Material:	Solid wood soft and hard, dry
Machine:	Multi-rip machine, single shaft, double shaft, splitting machine
Design:	Thin kerf, chip-thickness limited design (SDB), partially with stepped saw body, thicker design as an edge saw FlexWing (FW): variable tooth pitch, *oxide coated, special design, noise reduced
Tooth:	Flat tooth (F), Flat tooth with FlexWing (FW), Alternate top bevel tooth with chamfer (WS), Triple-chip tooth (T)
Feed:	MEC

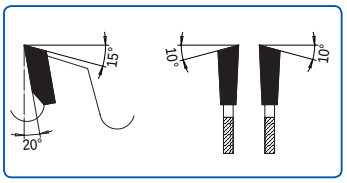

Fig.: Alternate top bevel tooth with chamfer (WS)

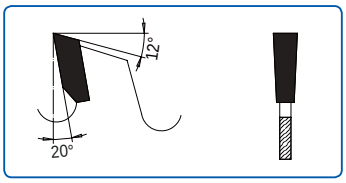

Fig.: Flat tooth (F), Flat tooth with FlexWing (FW)

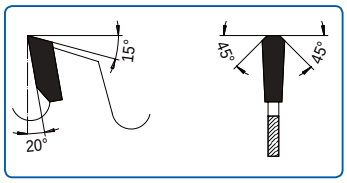

Fig.: Triple-chip tooth (T)

	D mm	B mm	H mm	b mm	d mm	FLD max mm	NL / KS mm	KN mm	Z	Tooth shape	Order No.	Price [PG 01]
	200	4,00		3,00	30				24	F	0005.200.31	
	200	1,20		0,80	50				28	F	0005.200.50*	
	200	1,50	47	1,1/2,2	60	105			28	F	0005.200.62*	
	220	1,40		1,00	50				33	FW	0005.220.50*	
	220	1,40		1,00	60		3/9/75		33	FW	0005.220.60*	
☐	220	1,40		1,00	65		3/10/80		33	FW	0005.220.65*	
	225	4,00		3,00	30				28	F	0005.225.30	
	225	1,70		1,20	60				28	T	0005.225.60*	
	250	2,40		1,60	30				24	F	0005.250.32	
	250	2,40		1,60	70			2/20x5	24	F	0005.250.72	
	250	2,80		2,00	70			2/20x5	24	F	0005.250.91	
	250	1,80		1,20	60				24	WS, SDB	0005.250.60	
☐	250	1,70	45	1,1/2,5	40	160		2/10x5,5	30	T	0005.250.40*	
	250	1,60		1,2	40				36	FW	0005.250.01*	
	280	2,20		1,40	60				32	WS, SDB	0005.280.60	
	300	2,80		2,00	30	145	KS		28	F	0005.300.31	
	300	2,80		2,00	70	145	KS	2/20x5	28	F	0005.300.91	

Sleeves and hydro sleeves with spacer rings on request

0005 Solid wood processing
Longitudinal cut

Application:	Longitudinal cut
Material:	Solid wood soft and hard, dry
Machine:	Multi-rip saw, sizing saw
Design:	Saw body with cooling slots (KS), partially chip-thickness limited design (SDB)
Tooth:	Flat tooth (F), alternate top bevel tooth (W), HW
Feed:	MAN / MEC

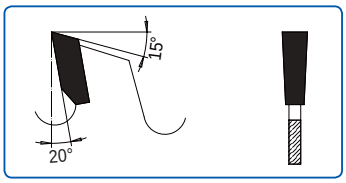

Fig.: Flat tooth (F)

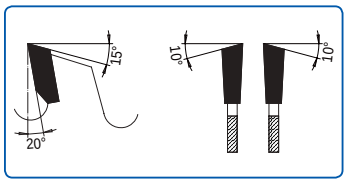

Fig.: Alternate top bevel tooth (W)

D mm	B mm	b mm	d mm	FLD max mm	NL mm	KN mm	KS	Z	Tooth shape	Order No.	Price [PG 01]
220	3,60	2,40	30					28	W	0005.220.30	
250	2,80	2,00	70			2/20x5		18	F, SDB	0005.252.70	
250	3,40	2,20	30					24	F	0005.250.30	
260	3,60	2,40	30					28	F	0005.260.30	
300	2,80	2,00	30	145			KS	28	F	0005.300.31	
300	2,80	2,00	70	145		2/20x5	KS	28	F	0005.300.91	
300	3,40	2,20	30	145			KS	20	F, SDB	0005.302.30	
300	3,40	2,20	70	145		2/20x5	KS	20	F, SDB	0005.302.70	
300	3,40	2,20	30	145			KS	28	F	0005.300.30	
300	3,40	2,20	70	155		2/20x5	KS	28	F	0005.300.70	
300	3,40	2,20	80	130	2/13/100 4/6,6/95 6/5,5/91	2/18,5x3,5	KS	28	F	0005.300.80*	
300	3,40	2,20	80	130	2/13/100 4/6,6/95 6/5,5/91	2/18,5x3,5		28	F	0005.300.84*	
300	3,40	2,20	80	130	2/13/100	2/20x5	KS	28	F	0005.300.81	
300	3,80	2,60	80	130	2/13/100 4/6,6/95 6/5,5/91	2/18,5x3,5	KS	36	F	0005.300.82*	
300	3,20	2,20	30	140			KS	36	W	0005.301.30	
300	4,40	2,80	30					28	F	0005.300.32	
350	3,60	2,40	30	150			KS	24	F, SDB	0005.352.30	
350	3,60	2,40	30	150			KS	30	F	0005.350.30	
350	3,60	2,40	70	150		2/20x5	KS	30	F	0005.350.70	
350	3,60	2,40	80	150	2/13/100 4/6,6/95 6/5,5/91	2/18,5x3,5	KS	30	F	0005.350.80*	
☐ 350	3,60	2,40	80	150	2/13/100 4/6,6/95 6/5,5/91	2/18,5x3,5		30	F	0005.350.84*	
350	3,60	2,40	80	150	2/13/100	2/20x5	KS	30	F	0005.350.81	
350	3,60	2,40	30	150			KS	36	W	0005.351.30	
400	4,00	2,60	30	190			KS	28	F	0005.400.30	

* Saw blades suitable for Raimann saws

0005 Spare circular saw blade
for saw blade built-up hoggers

Application:	Longitudinal cut; Edge hogger, Vario hogger
Material:	Solid wood soft and hard
Machine:	Multi-rip saw, trimming machine
Design:	Rigid saw body
Tooth:	Flat tooth (F), HW
Feed:	MAN / MEC

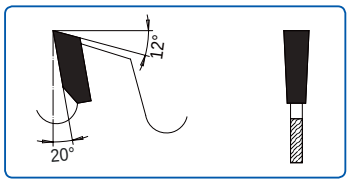

D mm	B mm	b mm	d mm	Z	Tooth shape	Order No.	Price [PG 01]
295	7,20	6,20/7,20	30	18	F	0005.295.30	
295	8,00	7,00	30	18	F	0005.295.31	

0007 Solid wood processing
Longitudinal cut

Application:	Longitudinal cut
Material:	Solid wood
Machine:	Multi-rip saw, trimming machine
Design:	Rigid saw body with cooling slots (KS), chip-thickness limited design (SDB)
Tooth:	Flat tooth (F), HW
Feed:	MAN / MEC

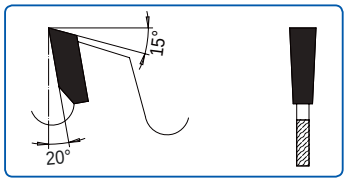

D mm	B mm	b mm	d mm	FLD max mm	KS	Z	Tooth shape	Order No.	Price [PG 01]
250	4,40	2,80	30	95	KS	18	F, SDB	0007.250.30	
300	4,40	2,80	30-86	145	KS	20	F, SDB	0007.300.30	
350	5,40	3,40	30-105	150	KS	24	F, SDB	0007.350.30	
400	5,40	3,40	30-105	185	KS	28	F, SDB	0007.400.30	

Bore and keyway dimension according to machine type; please use data sheet

0008 Solid wood processing
Longitudinal cut

Application:	Longitudinal cut
Material:	Solid wood dry, thermoplastic material, soft
Machine:	Sizing saw
Design:	Chip-thickness limited design (SDB)
Tooth:	Flat tooth (F), HW
Feed:	MAN / MEC

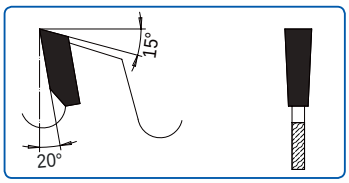

	D mm	B mm	b mm	d mm	NL mm	Z	Tooth shape	Order No.	Price [PG 01]
	300	3,20	2,20	30	NLK	20	F, SDB	0008.300.30	
TOP	350	3,60	2,40	30	NLK	16	F, SDB	0008.350.31	
TOP	350	3,60	2,40	30	NLK	24	F, SDB	0008.350.30	
TOP	400	3,60	2,40	30	NLK	18	F, SDB	0008.400.31	
TOP	400	3,60	2,40	30	NLK	28	F, SDB	0008.400.30	
	450	4,40	2,80	30	NLK	20	F, SDB	0008.450.30	
	500	4,40	2,80	30	NLK	24	F, SDB	0008.500.30	

Panel sizing circular saw blades
according to machines

anthon

BIESSE

Giben

HOLZHER

HOMAG

MAYER

PANHANS

SK SCHEER KOCH

IMA SCHELLING GROUP

scm

Further information:
ake.de/en/panel-sizing-saw-blades-2-0

Panel sizing circular saw blades
according to machines

= Diamond tipped » = Cutting 2.0

		Machine type	D mm	B mm	b mm	d mm	Z	Tooth shape	NL mm	Order No.	PG	Price
		Anthon										
		Scoring saw blade	180	4,4-5,6	3,40	20	28	F con.		0026.180.20	01	
	◆	Scoring saw blade	180	4,4-5,2	3,20	20	32	W con.		7026.180.21	03	
		Scoring saw blade	180	5,8-6,8	4,00	20	36	F con.		0026.182.20	01	
		Scoring saw blade	180	6,8-7,8	5,00	20	36	F con.		0026.180.34	01	
NEW	◆	Scoring saw blade	200	7,0-7,8	5,00	20	32	F con.	2/9/60	7026.200.27	03	
NEW		Scoring saw blade	200	7,0-8,0	5,00	20	36	F con.	2/9/60	0026.200.27	01	
NEW	»	Main saw blade	400	4,40	3,20	60	72	FT	2/11/85	2.0024.400.72.60	01	
		Main saw blade	400	4,40	3,20	60	72	FT	2/11/85	0024.400.60	01	
NEW	»	Main saw blade	430	4,40	3,20	60	72	FT	2/11/85	2.0024.430.72.60	01	
		Main saw blade	530	5,80	4,00	60	60	FT	2/11/85	0024.530.60	01	
NEW	»	Main saw blade	700	7,00	5,00	80	60	FT	2/17/110	2.0024B.700.60.80	01	
		Main saw blade	700	7,00	5,00	80	60	FT	2/17/110	0024.700.80	01	
NEW	»	Main saw blade	730	7,00	5,00	80	60	FT	2/17/110	2.0024B.730.60.80	01	
		Biesse / Selco										
		Scoring saw blade	200	3,7-4,5	2,80	65	32	F con.	2/9/100 2/9/110	0026.201.65	01	
	◆	Scoring saw blade	200	3,7-4,5	2,80	65	32	F con.	2/9/100 2/9/110	7026.201.65	03	
NEW	◆	Scoring saw blade	200	4,1-4,9	3,00	65	32	F con.	2/9/100 2/9/110	7026.201.66	03	
	◆	Scoring saw blade	200	4,4-5,2	3,50	65	32	F con.	2/9/100 2/9/110	7026.200.67	03	
	◆	Scoring saw blade	200	4,8-5,6	3,50	65	32	F con.	2/9/100 2/9/110	7026.200.68	03	
NEW		Scoring saw blade	200	4,1-5,3	3,00	65	36	F con.	2/9/100 2/9/110	0026.201.66	01	
		Scoring saw blade	200	4,4-5,6	3,20	65	36	F con.	2/9/100 2/9/110	0026.200.65	01	
		Scoring saw blade	200	4,4-5,6	3,20	65	36	W con.	2/9/100 2/9/110	0026.200.67	01	
		Scoring saw blade	200	4,8-5,8	3,50	65	36	F con.	2/9/100 2/9/110	0026.200.66	01	
NEW		Postforming	300	3,7-4,5	2,80	65	48	W con.	2/9/100 2/9/110	0026.300.70	01	
NEW		Postforming	300	4,1-4,9	3,00	65	48	W con.	2/9/100 2/9/110	0026.300.71	01	
		Postforming	300	4,4-5,6	3,20	65	48	W con.	2/9/100 2/9/110	0026.300.69	01	
		Postforming	300	4,8-5,6	3,50	65	48	W con.	2/9/110	0026.300.67	01	
NEW	»	Main saw blade	300	4,40	3,20	65	60	FT	2/9/110	2.0024.300.60.65	01	
		Main saw blade	300	4,40	3,20	65	60	FT	2/9/110	0024.300.65	01	
NEW		Postforming	300	3,80	2,80	65	72	W, Fa	2/9/100 2/9/110	0026.300.72	01	
		Postforming	300	4,55	3,20	65	72	W	2/9/100 2/9/110	0026.300.68	01	
		Postforming	300	4,60	3,20	65	72	W	2/9/100 2/9/110	0026.300.65	01	

Panel sizing circular saw blades
according to machines

= Diamond tipped » = Cutting 2.0

	Machine type	D mm	B mm	b mm	d mm	Z	Tooth shape	NL mm	Order No.	PG	Price
	Postforming	300	4,8-5,6	3,20	65	72	F con.	2/9/110	0026.300.66	01	
NEW »	Main saw blade	320	3,60	2,80	65	60	FT	2/9/110	2.0024C.320.60.65	01	
	Main saw blade	320	4,40	3,20	65	60	FT	2/9/110	0024.320.65	01	
»	Main saw blade	320	4,40	3,20	65	60	FT	2/9/110	2.0024.320.60.65	01	
NEW	Postforming	350	3,80	2,80	65	72	W, Fa	2/9/100 2/9/110	0026.350.67	01	
NEW	Postforming	350	4,20	3,00	65	72	W, Fa	2/9/100 2/9/110	0026.350.68	01	
	Postforming	350	4,60	3,20	65	72	W	2/9/110	0026.350.66	01	
	Postforming	350	5,00	3,50	65	72	W	2/9/110	0026.350.65	01	
NEW »	Main saw blade	355	3,60	2,80	65	72	FT	2/9/110	2.0024C.355.72.65	01	
NEW »	Main saw blade	355	4,40	3,20	65	72	FT	2/9/110	2.0024.355.72.65	01	
	Main saw blade	355	4,40	3,20	65	72	FT	2/9/110	0024.355.65	01	
NEW »	Main saw blade	355	4,40	3,20	80	72	FT	4/19/120 2/9/130 4/11/130	2.0024.355.72.80A	01	
	Main saw blade	355	4,40	3,20	80	72	FT	2/9/130 4/19/120	0024.355.82	01	
	Main saw blade	360	4,40	3,20	65	72	FT	2/9/110	0024.360.65	01	
	Main saw blade	360	4,40	3,20	65	72	TT	2/9/110	0428.360.65	01	
»	Main saw blade	360	4,40	3,20	65	72	FT	2/9/110	2.0024.360.72.65	01	
NEW »	Main saw blade	380	3,60	2,80	65	72	FT	2/9/110	2.0024C.380.72.65	01	
»	Main saw blade	380	4,40	3,20	65	72	FT	2/9/110	2.0024.380.72.65	01	
	Main saw blade	380	4,40	3,20	65	72	FT	2/9/110	0024.380.65	01	
»	Main saw blade	400	4,00	3,00	65	72	FT	2/9/110	2.0024C.400.72.65	01	
	Main saw blade	400	4,40	3,20	65	72	FT	2/9/110	0024.400.65	01	
»	Main saw blade	400	4,80	3,50	65	72	FT	2/9/110	2.0024.400.72.65	01	
	Main saw blade	400	4,40	3,20	80	72	FT	2/9/130 4/19/120	0024.400.80	01	
	Main saw blade	400	4,40	3,20	80	72	FFT	2/9/130 4/19/120	0224.400.80	01	
»	Main saw blade	400	4,40	3,20	80	72	FT	4/19/120 2/9/130 4/11/130	2.0024.400.72.80A	01	
NEW »	Main saw blade	430	4,00	3,00	65	72	FT	2/9/110	2.0024C.430.72.65	01	
	Main saw blade	430	4,40	3,20	65	72	FT	2/9/110	0024.430.65	01	
NEW »	Main saw blade	430	4,80	3,50	65	72	FT	2/9/110	2.0024.430.72.65	01	
NEW »	Main saw blade	430	4,80	3,50	70	72	FT	4/19/120 2/9/130 4/11/130	2.0024.430.72.70	01	
	Main saw blade	430	4,80	3,50	70	72	FT	4/11/130	0024.430.70	01	
	Main saw blade	430	4,40	3,20	80	72	FT	2/9/130 4/19/120	0024.430.80	01	

Panel sizing circular saw blades
according to machines

◆ = Diamond tipped » = Cutting 2.0

	Machine type	D mm	B mm	b mm	d mm	Z	Tooth shape	NL mm	Order No.	PG	Price
◆	Main saw blade	430	4,40	3,20	80	72	FT	2/9/130 4/19/120	7024.430.05	03	
»	Main saw blade	430	4,40	3,20	80	72	FT	4/19/120 2/9/130 4/11/130	2.0024.430.72.80	01	
	Main saw blade	450	4,40	3,20	80	72	FT	2/9/130 4/19/120	0024.450.82	01	
	Main saw blade	450	4,80	3,50	80	72	FT	2/9/130 4/19/120	0024.450.83	01	
	Main saw blade	450	4,80	3,50	80	72	FFT	2/9/130 4/19/120	0224.450.83	01	
»	Main saw blade	450	4,80	3,50	80	72	FT	4/19/120 2/9/130 4/11/130	2.0024.450.72.80-B48	01	
NEW »	Main saw blade	470	4,80	3,50	70	72	FT	4/19/120 2/9/130 4/11/130	2.0024.470.72.70	01	
	Main saw blade	470	4,80	3,50	70	72	FT	4/11/130	0024.470.70	01	
NEW »	Main saw blade	480	4,80	3,50	70	72	FT	4/19/120 2/9/130 4/11/130	2.0024.480.72.70	01	
NEW »	Main saw blade	480	4,80	3,50	80	72	FT	4/19/120 2/9/130 4/11/130	2.0024.480.72.80	01	
	Main saw blade	480	4,80	3,50	80	72	FT	2/9/130 4/19/120	0024.480.80	01	
	Main saw blade	480	4,80	3,50	80	72	FFT	2/9/130 4/19/120	0224.480.80	01	
NEW »	Main saw blade	510	4,80	3,50	80	72	FT	4/19/120 2/9/130 4/11/130	2.0024.510.72.80	01	
	Main saw blade	510	4,80	3,50	80	72	FT	2/9/130 4/19/120	0024.510.80	01	
NEW »	Main saw blade	520	4,80	3,50	70	72	FT	4/19/120 2/9/130 4/11/130	2.0024.520.72.70	01	
	Main saw blade	520	4,80	3,50	70	72	FT	4/11/130	0024.520.70	01	
	Giben										
◆	Scoring saw blade	125	4,4-5,2	3,40	20	24	F con.		7026.125.21	03	
	Scoring saw blade	125	4,4-5,6	3,40	45	24	F con.		0026.125.45	01	
	Scoring saw blade	127	3,8-5,0	2,80	45	24	F con.		0026.127.03	01	
	Scoring saw blade	127	4,0-5,2	3,40	45	24	F con.		0026.127.04	01	
◆	Scoring saw blade	127	4,4-5,2	3,40	45	24	F con.		7026.127.01	03	
	Scoring saw blade	127	4,4-5,6	3,40	45	24	F con.		0026.127.02	01	
NEW ◆	Scoring saw blade	160	4,4-5,2	3,20	45	28	F con.	3/11/70	7026.160.45	03	
	Scoring saw blade	160	4,4-5,6	3,20	45	28	F con.	3/11/70	0026.160.45	01	
NEW ◆	Scoring saw blade	180	4,4-5,2	3,20	50	42	F con.	3/13/80	7026.180.50	03	
	Scoring saw blade	180	4,4-5,6	3,40	50	42	F con.	3/13/80	0026.180.50	01	
	Scoring saw blade	190	3,7-4,5	2,80	50	32	F con.	2/7/80	0026.190.51	01	
◆	Scoring saw blade	190	3,7-4,5	2,80	50	32	F con.	2/7/80	7026.190.50	03	
	Scoring saw blade	190	4,0-5,2	2,80	50	32	W con.	2/7/80	0026.190.50	01	

Panel sizing circular saw blades
according to machines

AKE Cutting & better

= Diamond tipped » = Cutting 2.0

	Machine type	D mm	B mm	b mm	d mm	Z	Tooth shape	NL mm	Order No.	PG	Price
NEW ◇	Scoring saw blade	190	4,4-5,2	3,20	50	32	F con.	2/7/80	7026.190.52	03	
NEW	Main saw blade	190	4,4-5,6	3,20	50	36	F con.	2/7/80	0026.190.52	01	
NEW ◇	Scoring saw blade	200	4,4-5,2	3,20	50	42	F con.	3/13/80	7026.201.50	03	
	Scoring saw blade	200	4,4-5,6	3,20	50	42	F con.	3/13/80	0026.201.50	01	
NEW	Scoring saw blade	215	3,7-4,5	2,80	50	32	F con.	2/7/80	0026.215.53	01	
NEW ◇	Scoring saw blade	215	3,7-4,5	2,80	50	32	F con.	2/7/80	7026.215.53	03	
NEW ◇	Scoring saw blade	215	4,4-5,2	3,20	50	42	F con.	2/7/80 3/15/80	7026.215.03	03	
	Scoring saw blade	215	4,4-5,6	3,20	50	42	F con.	2/7/80 3/15/80	0026.215.50	01	
NEW ◇	Scoring saw blade	215	4,8-5,6	3,50	50	42	F con.	2/7/80	7026.215.51	03	
NEW	Main saw blade	215	4,8-5,8	3,50	50	42	F con.	2/7/80	0026.215.51	01	
	Postforming	300	4,4-5,6	3,50	50	48	F con.	3/15/80	0026.300.50	01	
NEW »	Main saw blade	320	4,40	3,20	50	60	FT	3/13/80 3/13/95	2.0024.320.60.50	01	
	Main saw blade	320	4,40	3,20	50	60	TT	3/13/80 3/13/95	0428.320.50	01	
NEW »	Main saw blade	320	4,40	3,20	75	60	FT	3/13/95	2.0024.320.60.75	01	
	Main saw blade	320	4,40	3,20	75	72	FT	3/13/95	0024.320.75	01	
	Main saw blade	330	4,40	3,20	50	60	FT	4/13/80	0024.330.50	01	
	Main saw blade	350	4,40	3,20	50	72	FT	4/13/80	0024.350.50	01	
NEW »	Main saw blade	350	4,40	3,20	75	72	FT		2.0024.350.72.75	01	
	Main saw blade	355	4,40	3,20	75	54	FT		0024.355.76	01	
	Main saw blade	355	4,40	3,00	75	72	FFT		0224.355.77	01	
	Main saw blade	355	4,40	3,20	75	72	FT		0024.355.77	01	
»	Main saw blade	355	4,40	3,20	75	72	FT		2.0024.355.72.75	01	
NEW »	Main saw blade	360	4,40	3,20	75	72	FT	4/15/105 2/7/110	2.0024.360.72.75	01	
NEW »	Main saw blade	380	4,40	3,20	50	72	FT	4/13/80	2.0024.380.72.50	01	
	Main saw blade	380	4,40	3,20	50	72	TT	4/13/80	0428.380.50	01	
»	Main saw blade	380	3,60	2,80	75	72	FT	2/7/110	2.0024C.380.72.75	01	
NEW »	Main saw blade	380	4,40	3,20	75	72	FT	4/15/105 2/7/110	2.0024.380.72.75	01	
	Main saw blade	400	4,40	3,00	75	72	FFT	4/15/105	0224.400.75	01	
NEW »	Main saw blade	400	4,40	3,20	75	72	FT	4/15/105 2/7/110	2.0024.400.72.75	01	
NEW »	Main saw blade	400	4,40	3,20	75	72	FT	4/15/105 2/7/110	2.0024.400.72.75	01	
	Main saw blade	400	4,40	3,20	75	72	FT	4/15/105	0024.400.75	01	
NEW »	Main saw blade	430	4,40	3,20	75	72	FT	4/15/105 2/7/110	2.0024.430.72.75	01	
	Main saw blade	430	4,40	3,20	75	72	FT	4/15/105	0024.430.77	01	

Panel sizing circular saw blades
according to machines

= Diamond tipped = Cutting 2.0

		Machine type	D mm	B mm	b mm	d mm	Z	Tooth shape	NL mm	Order No.	PG	Price
		Main saw blade	430	4,40	3,20	75	96	FT	4/15/105	0024.430.75	01	
NEU	»	Main saw blade	450	4,40	3,20	75	72	FT	4/15/105 2/7/110	2.0024.450.72.75	01	
NEU	»	Main saw blade	470	4,80	3,50	75	72	FT	4/15/105 2/7/110	2.0024.470.72.75	01	
	»	Main saw blade	470	4,40	3,20	75	96	FT	4/15/105 2/7/110	2.0024.470.96.75	01	
		Main saw blade	470	4,40	3,20	75	96	FT	4/15/105	0024.470.75	01	
		Holz-Her										
NEU		Scoring saw blade	180	3,7-4,5	2,80	30	28	F con.	NLK	0026.180.36	01	
NEU	◆	Scoring saw blade	180	3,7-4,5	2,80	30	28	F con.	NLK	7026.180.36	03	
	◆	Scoring saw blade	180	4,4-5,2	3,20	30	28	F con.	NLK	7026.180.17	03	
		Scoring saw blade	180	4,4-5,6	3,40	30	28	F con.	NLK	0026.180.30	01	
		Main saw blade	350	4,40	3,20	30	54	FT	2/10/60	0024.350.30	01	
		Main saw blade	350	4,40	3,20	30	72	FT	2/10/60	0024.350.31	01	
		Main saw blade	350	4,40	3,00	30	72	FFT	2/10/60	0224.350.31	01	
		Main saw blade	350	4,40	3,20	30	72	TT	2/10/60	0428.350.30	01	
		Main saw blade	380	4,40	3,20	30	72	FT	2/10/60	0024.380.30	01	
NEU	»	Main saw blade	380	4,40	3,20	30	72	FT	NLK 2/13/94	2.0024.380.72.30	01	
	◆	Main saw blade	380	4,40	3,20	30	72	FT		7024.380.30	03	
NEU	»	Main saw blade	430	4,40	3,20	30	72	FT	NLK 2/13/94	2.0024.430.72.30	01	
		Homag										
NEU	◆	Scoring saw blade	125	4,4-5,2	3,20	45	24	F con.		7026.125.45	03	
NEU	◆	Scoring saw blade	150	4,4-5,2	3,40	30	28	F con.		7026.150.46	03	
		Scoring saw blade	150	3,3-4,1	2,20	45	28	F con.		0026.150.46	01	
	◆	Scoring saw blade	150	3,3-4,1	2,20	45	28	F con.		7026.150.45	03	
		Scoring saw blade	150	4,4-5,6	3,40	45	28	F con.		0026.150.45	01	
		Scoring saw blade	175	4,6-5,8	3,50	45	28	F con.		0026.175.45	01	
	◆	Scoring saw blade	180	4,4-5,2	3,20	45	32	F con.		7026.180.44	03	
	◆	Scoring saw blade	180	4,8-5,6	3,50	45	32	F con.		7026.180.46	03	
		Scoring saw blade	180	3,7-4,5	2,80	45	36	F con.		0026.180.47	01	
	◆	Scoring saw blade	180	3,7-4,5	2,80	45	36	F con.		7026.181.45	03	
		Scoring saw blade	180	4,4-5,6	3,20	45	36	F con.		0026.180.45	01	
		Scoring saw blade	180	4,8-5,8	3,50	45	36	F con.		0026.181.45	01	
		Scoring saw blade	180	4,8-5,8	3,50	45	36	W con.		0026.180.46	01	
	◆	Scoring saw blade	200	4,4-5,2	3,50	45	32	F con.		7026.200.51	03	
	◆	Scoring saw blade	200	4,8-5,6	3,50	45	32	F con.		7026.200.46	03	
	◆	Scoring saw blade	200	5,8-6,6	4,50	45	32	F con.		7026.200.47	03	

Panel sizing circular saw blades
according to machines

AKE Cutting & better

= Diamond tipped » = Cutting 2.0

		Machine type	D mm	B mm	b mm	d mm	Z	Tooth shape	NL mm	Order No.	PG	Price
NEU	◇	Scoring saw blade	200	6,2-7,0	4,20	45	32	F con.		7026.200.48	03	
		Scoring saw blade	200	3,3-4,1	2,20	45	36	F con.		0026.201.45	01	
	◇	Scoring saw blade	200	3,3-4,1	2,20	45	36	F con.		7026.200.45	03	
NEU		Scoring saw blade	200	3,7-4,5	2,80	45	36	F con.		0026.201.46	01	
NEU	◇	Scoring saw blade	200	3,7-4,5	2,80	45	36	F con.		7026.201.46	03	
		Scoring saw blade	200	4,4-5,2	3,20	45	36	F con.		0026.200.51	01	
		Postforming	200	4,6-5,6	3,50	45	36	W con.		0026.200.38	01	
		Scoring saw blade	200	4,8-5,8	3,50	45	36	F con.		0026.200.45	01	
		Scoring saw blade	200	4,8-5,8	3,50	45	36	W con.		0026.200.49	01	
		Scoring saw blade	200	5,9-6,9	3,50	45	36	F con.		0026.200.47	01	
		Scoring saw blade	200	6,2-7,2	4,20	45	36	F con.		0026.200.46	01	
NEU		Scoring saw blade	220	3,3-4,1	2,40	45	60	F con.		0026.220.46	01	
NEU		Scoring saw blade	280	3,40	2,40	45	60	W		0026.280.48	01	
NEU		Postforming	280	4,4-5,2	3,20	45	72	F con.		0026.280.47	01	
		Postforming	280	4,8-5,8	3,50	45	72	W con.		0026.280.46	01	
		Postforming	280	5,00	3,50	45	84	W		0026.280.45	01	
	»	Main saw blade	300	3,20	2,20	60	60	FT	2/14/100	2.0024C.300.60.60	01	
NEU	»	Main saw blade	300	4,40	3,20	60	60	FT	2/14/100 2/11/115 2/19/120 2/14/125	2.0024.300.60.60	01	
NEU	»	Main saw blade	300	4,40	3,20	75	60	FT	2/9/110	2.0024.300.60.75	01	
		Main saw blade	300	4,40	3,20	60	72	FT	2/14/100	0024.300.60	01	
		Main saw blade	300	4,40	3,20	75	72	FT		0024.300.75	01	
		Main saw blade	300	4,40	3,00	75	72	FT		0224.300.75	01	
	»	Main saw blade	308	3,20	2,40	60	96	T	2/14/100	2.0024.308.96.60	01	
NEU	»	Main saw blade	310	4,40	3,20	60	60	FT	2/14/100 2/11/115 2/19/120 2/14/125	2.0024.310.60.60	01	
		Main saw blade	310	4,40	3,20	60	72	FT	2/14/100	0024.310.60	01	
		Postforming	340	5,00	3,50	45	108	W	3/14/65	0026.341.49	01	
	»	Main saw blade	350	3,60	2,80	60	72	FT	2/14/100	2.0024C.350.72.60	01	
		Main saw blade	350	4,40	3,20	60	72	FT	2/14/100	0024.350.60	01	
		Main saw blade	350	4,40	3,20	60	72	TT	2/14/100	0428.350.60	01	
	»	Main saw blade	350	4,40	3,20	60	72	FT	2/14/100 2/11/115 2/19/120 2/14/125	2.0024.350.72.60	01	
	»	Main saw blade	380	3,60	2,80	60	72	FT	2/14/100 2/14/125	2.0024C.380.72.60	01	
		Main saw blade	380	4,40	3,20	60	72	FT		0024.380.60	01	

Panel sizing circular saw blades
according to machines

= Diamond tipped = Cutting 2.0

	Machine type	D mm	B mm	b mm	d mm	Z	Tooth shape	NL mm	Order No.	PG	Price
	Main saw blade	380	4,40	3,20	60	72	TT	2/14/100 2/14/125	0428.380.62	01	
»	Main saw blade	380	4,40	3,20	60	72	FT	2/14/100 2/11/115 2/19/120 2/14/125	2.0024.380.72.60-B44	01	
◆	Main saw blade	380	4,40	3,20	60	72	FT	2/14/100 2/14/125	7024.380.13	03	
	Main saw blade	380	4,80	3,50	60	72	FT	2/14/100 2/14/125	0024.381.60	01	
	Main saw blade	380	4,80	3,50	60	72	TT	2/14/100 2/14/125	0428.380.60	01	
»	Main saw blade	380	4,80	3,50	60	72	FT	2/14/100 2/11/115 2/19/120 2/14/125	2.0024.380.72.60-B48	01	
	Main saw blade	380	4,80	3,50	60	72	FFT	2/14/100 2/14/125	0224.381.60	01	
◆	Main saw blade	380	4,80	3,50	60	72	FT	2/14/100 2/14/125	7024.380.66	03	
»	Main saw blade	380	4,80	3,50	60	84	FT	2/14/100 2/11/115 2/19/120 2/14/125	2.0024.380.84.60	01	
	Main saw blade	380	4,80	3,50	60	84	FT	2/14/100 2/14/125	0024.381.61	01	
	Main saw blade	380	4,80	3,50	60	96	FT	2/14/100 2/14/125	0024.381.63	01	
	Main saw blade	420	4,60	3,20	60	72	FT	2/19/120 2/14/125	0024.420.60	01	
	Main saw blade	420	4,80	3,50	60	72	FT	2/19/120 2/14/125	0024.421.60	01	
	Main saw blade	420	4,80	3,50	60	72	FFT	2/19/120 2/14/125	0224.421.60	01	
»	Main saw blade	420	4,80	3,50	60	72	FT	2/14/100 2/11/115 2/19/120 2/14/125	2.0024.420.72.60	01	
	Main saw blade	420	4,80	3,50	60	84	FT	2/19/120 2/14/125	0024.421.61	01	
»	Main saw blade	450	4,40	3,20	60	72	FT	2/14/100 2/11/115 2/19/120 2/14/125	2.0024.450.72.60-B44	01	
	Main saw blade	450	4,80	3,50	60	72	FT	2/19/120 2/14/125	0024.450.62	01	
◆	Main saw blade	450	4,80	3,50	60	72	FT	2/19/120 2/14/125	7024.450.62	03	
	Main saw blade	450	4,80	3,50	60	72	FFT	2/19/120 2/14/125	0224.450.62	01	
	Main saw blade	450	4,80	3,50	60	72	TT	2/19/120 2/14/125	0428.450.60	01	
»	Main saw blade	450	4,80	3,50	60	72	FT	2/14/100 2/11/115 2/19/120 2/14/125	2.0024.450.72.60-B48	01	
	Main saw blade	450	4,80	3,50	60	84	FT	2/19/120 2/14/125	0024.450.64	01	
	Main saw blade	480	4,80	3,50	60	72	FT	2/19/120	0024.480.60	01	
	Main saw blade	480	4,80	3,50	60	72	TT	2/19/120 2/11/115	0428.480.60	01	

Panel sizing circular saw blades
according to machines

AKE Cutting & better

= Diamond tipped = Cutting 2.0

	Machine type	D mm	B mm	b mm	d mm	Z	Tooth shape	NL mm	Order No.	PG	Price
	Main saw blade	480	4,80	3,50	60	72	FT	2/19/120 2/11/115	7124.480.60	03	
	Main saw blade	480	4,80	3,50	60	72	FT	2/14/100 2/11/115 2/19/120 2/14/125	2.0024.480.72.60	01	
	Main saw blade	500	4,80	3,50	60	60	FT	2/11/115	0024.500.60	01	
NEW	Main saw blade	500	4,80	3,50	60	72	FT	2/14/100 2/11/115 2/19/120 2/14/125	2.0024.500.72.60	01	
	Main saw blade	500	4,80	3,50	60	72	FT	2/11/115	0024.500.61	01	
	Main saw blade	500	4,80	3,50	60	72	FFT	2/11/115	0224.500.61	01	
	Main saw blade	520	4,80	3,50	60	60	FT	2/19/120 2/11/115	0024.520.60	01	
NEW	Main saw blade	520	4,80	3,50	60	72	FT	2/14/100 2/11/115 2/19/120 2/14/125	2.0024.520.72.60	01	
	Main saw blade	520	4,80	3,50	60	72	TT	2/19/120 2/11/115	0428.520.60	01	
	Main saw blade	520	4,80	3,50	60	84	FT	2/19/120 2/11/115	0024.520.61	01	
NEW	Main saw blade	570	4,80	3,50	60	60	FT	2/14/100 2/11/115 2/19/120 2/14/125	2.0024B.570.60.60	01	
	Main saw blade	570	4,80	3,50	60	60	FT	2/19/120	0024.570.60	01	
	Main saw blade	570	4,80	3,50	60	60	FFT	2/19/120	0224.570.60	01	
NEW	Main saw blade	600	5,80	4,00	60	60	FT	2/14/100 2/11/115 2/19/120 2/14/125	2.0024B.600.60.60	01	
	Main saw blade	600	5,80	4,00	60	60	FT	2/19/120 2/11/115	0024.600.60	01	
	Main saw blade	600	5,80	4,00	60	60	FFT	2/19/120 2/11/115	0224.600.60	01	
NEW	Main saw blade	600	5,80	4,00	60	60	FT	2/19/120 2/11/115	7024.600.60	03	
	Main saw blade	600	5,80	4,00	60	72	FT	2/14/100 2/11/115 2/19/120 2/14/125	2.0024B.600.72.60	01	
	Main saw blade	600	5,80	4,00	60	72	FT	2/19/120 2/11/115	0024.600.61	01	
NEW	Main saw blade	670	5,80	4,20	60	48	FT	2/19/120 2/11/148	2.0024B.670.48.60	01	
NEW	Main saw blade	730	6,20	4,20	60	60	FT	2/19/120 2/11/148	2.0024B.730.60.60	01	
	Main saw blade	730	6,20	4,20	60	60	FT	2/19/120 2/11/148	0024.730.60	01	
	Mayer										
	Scoring saw blade	127	4,0-5,2	3,40	45	24	F con.		0026.127.04	01	
	Scoring saw blade	127	4,4-5,2	3,40	45	24	F con.		7026.127.01	03	

Panel sizing circular saw blades
according to machines

= Diamond tipped = Cutting 2.0

	Machine type	D mm	B mm	b mm	d mm	Z	Tooth shape	NL mm	Order No.	PG	Price
	Scoring saw blade	127	4,4-5,6	3,40	45	24	F con.		0026.127.02	01	
NEW	Scoring saw blade	150	3,3-4,1	2,20	30	28	F con.		0026.150.32	01	
	Scoring saw blade	150	3,7-4,5	2,80	30	28	F con.		0026.151.30	01	
◆	Scoring saw blade	150	3,7-4,5	2,80	30	28	F con.		7026.150.30	03	
◆	Scoring saw blade	150	4,4-5,2	3,20	30	28	F con.		7026.150.13	03	
	Scoring saw blade	150	4,4-5,6	3,40	30	28	F con.		0026.150.06	01	
	Scoring saw blade	150	4,4-5,6	3,40	30	28	W con.		0026.150.31	01	
	Main saw blade	305	4,00	2,80	30	54	FT	2/10/60	0024.305.30	01	
	Main saw blade	305	4,40	3,00	30	54	W	2/10/60	0023.305.30	01	
	Main saw blade	305	4,40	3,00	30	54	FT	2/10/60	0024.305.31	01	
	Main saw blade	305	4,40	3,00	30	60	FT	2/10/60	0024.305.32	01	
	Main saw blade	305	4,40	3,00	30	60	FT	2/10/60	0124.305.32	01	
»	Main saw blade	305	4,40	3,20	30	60	FT	NLK 2/13/94	2.0024.305.60.30	01	
	Main saw blade	320	4,40	3,00	30	60	FT	2/10/60	0024.320.30	01	
NEW »	Main saw blade	320	4,40	3,20	30	60	FT	NLK 2/13/94	2.0024.320.60.30	01	
	Main saw blade	350	4,40	3,20	30	54	FT	2/10/60	0024.350.30	01	
»	Main saw blade	350	3,60	2,80	30	72	FT	2/10/60	2.0024C.350.72.30	01	
◆	Main saw blade	350	4,40	3,00	30	72	FT	2/10/60	7024.350.05	03	
	Main saw blade	350	4,40	3,20	30	72	FT	2/10/60	0024.350.31	01	
	Main saw blade	350	4,40	3,00	30	72	FT	2/10/60	0124.350.31	01	
	Main saw blade	355	4,40	3,20	30	54	W		0023.355.30	01	
	Main saw blade	355	4,00	2,80	30	72	FT	2/10/60	0024.355.28	01	
	Main saw blade	355	4,40	3,20	30	72	W		0023.355.31	01	
	Main saw blade	355	4,40	3,20	30	72	FT	2/10/60	0024.355.29	01	
	Main saw blade	355	4,40	3,00	30	72	FFT	2/10/60	0224.355.29	01	
	Main saw blade	355	4,40	3,20	30	72	TT	2/10/60	0428.355.30	01	
»	Main saw blade	355	4,40	3,20	30	72	FT	NLK 2/13/94	2.0024.355.72.30	01	
	Main saw blade	400	4,40	3,20	30	60	W		0023.400.30	01	
	Main saw blade	400	4,40	3,20	30	72	W		0023.400.31	01	
	Main saw blade	400	4,40	3,20	30	72	FT	2/10/60	0024.400.30	01	
	Main saw blade	400	4,40	3,20	30	72	FT	KS	0024.402.30	01	
	Main saw blade	400	4,40	3,20	30	72	FT	2/10/60	0124.400.30	01	
	Main saw blade	400	4,40	3,00	30	72	FFT	2/10/60	0224.400.30	01	
	Main saw blade	400	4,40	3,20	30	72	TT	2/10/60	0428.400.30	01	

Panel sizing circular saw blades
according to machines

= Diamond tipped = Cutting 2.0

	Machine type	D mm	B mm	b mm	d mm	Z	Tooth shape	NL mm	Order No.	PG	Price
»	Main saw blade	400	4,40	3,20	30	72	FT	NLK 2/13/94	2.0024.400.72.30-B44	01	
NEW »	Main saw blade	450	4,40	3,20	30	72	FT	NLK 2/13/94	2.0024.450.72.30	01	
	Main saw blade	450	4,40	3,20	30	72	FT	2/10/60	0024.450.30	01	
	Main saw blade	450	4,40	3,20	30	72	FFT	2/10/60	0224.450.30	01	
	Panhans										
	Scoring saw blade	125	3,1-3,9	2,20	20	24	F con.		7026.125.25	03	
	Scoring saw blade	125	3,1-4,3	2,80	20	24	F con.		0026.125.03	01	
	Scoring saw blade	125	4,4-5,2	3,40	20	24	F con.		7026.125.21	03	
	Scoring saw blade	125	4,4-5,6	3,40	20	24	F con.		0026.125.02	01	
	Scoring saw blade	180	3,3-4,1	2,20	30	28	F con.	NLK	0026.180.32	01	
	Scoring saw blade	180	3,3-4,1	2,20	30	28	F con.	NLK	7026.180.30	03	
	Scoring saw blade	180	4,4-5,2	3,20	30	28	F con.	NLK	7026.180.17	03	
	Scoring saw blade	180	4,4-5,6	3,40	30	28	F con.	NLK	0026.180.30	01	
	Scoring saw blade	180	4,4-5,2	3,20	20	32	W con.		7026.180.21	03	
	Postforming	180	4,55	3,50	30	36	W 5°		0026.180.31	01	
	Scoring saw blade	200	3,7-4,5	2,80	20	36	F con.	2/11/66	0026.200.25	01	
	Scoring saw blade	200	3,7-4,5	2,80	20	36	F con.	2/11/66	7026.200.21	03	
	Scoring saw blade	200	4,4-5,6	3,40	20	36	W con.		0026.200.26	01	
	Scoring saw blade	200	4,4-5,2	3,50	30	36	F con.	2/8,5/60	7026.200.26	03	
	Scoring saw blade	200	4,4-5,6	3,20	30	36	F con.	2/8,5/60	0026.200.30	01	
NEW »	Main saw blade	280	3,20	2,20	30	60	FT	NLK 2/13/94	2.0024.280.60.30	01	
»	Main saw blade	300	3,20	2,20	30	60	FT	NLK	2.0024C.300.60.30	01	
	Main saw blade	300	4,40	3,00	30	60	FT	2/10/60	0024.300.30	01	
	Main saw blade	300	4,40	3,00	30	60	FFT	2/10/60	0224.300.30	01	
»	Main saw blade	300	4,40	3,20	30	60	FT	NLK 2/13/94	2.0024.300.60.30	01	
NEW »	Main saw blade	305	4,40	3,20	30	60	FT	NLK 2/13/94	2.0024.305.60.30	01	
	Main saw blade	350	4,40	3,20	30	54	FT	2/10/60	0024.350.30	01	
»	Main saw blade	350	3,60	2,80	30	72	FT	2/10/60	2.0024C.350.72.30	01	
	Main saw blade	350	4,40	3,00	30	72	FFT	2/10/60	0224.350.31	01	
	Main saw blade	350	4,40	3,00	30	72	FT	2/10/60	0124.350.31	01	
	Main saw blade	350	4,40	3,20	30	72	FT	2/10/60	0024.350.31	01	
»	Main saw blade	350	4,40	3,20	30	72	FT	NLK 2/13/94	2.0024.350.72.30-B44	01	
	Main saw blade	355	4,40	3,00	30	72	FFT	2/10/60	0224.355.29	01	
	Main saw blade	355	4,40	3,20	30	72	FT	2/10/60	0024.355.29	01	
	Main saw blade	400	4,40	3,20	30	60	FT		0024.400.31	01	

Panel sizing circular saw blades
according to machines

◆ = Diamond tipped » = Cutting 2.0

		Machine type	D mm	B mm	b mm	d mm	Z	Tooth shape	NL mm	Order No.	PG	Price
		Main saw blade	400	4,40	3,00	30	72	FFT		0224.400.30	01	
		Main saw blade	400	4,40	3,20	30	72	FT	2/10/60	0024.400.30	01	
		Main saw blade	400	4,40	3,20	30	72	FT	KS	0024.402.30	01	
		Main saw blade	400	4,40	3,20	30	72	FT	2/10/60	0124.400.30	01	
		Main saw blade	400	4,40	3,20	30	72	TT		0428.400.30	01	
	»	Main saw blade	450	4,40	3,20	30	72	FT	NLK 2/13/94	2.0024.450.72.30	01	
		Main saw blade	450	4,40	3,20	30	72	FT	2/10/60	0024.450.30	01	
		Main saw blade	450	4,40	3,20	30	72	FFT	2/10/60	0224.450.30	01	
		Scheer										
		Scoring saw blade	180	3,2-4,3	2,80	16	42	F con.	2/6/33	0026.180.16	01	
NEW		Scoring saw blade	200	3,7-4,5	2,80	30	36	F con.	2/8,5/60	0026.201.30	01	
NEW	◆	Scoring saw blade	200	3,7-4,5	2,80	30	36	F con.	2/8,5/60	7026.201.30	03	
	◆	Scoring saw blade	200	4,4-5,2	3,50	30	36	F con.	2/8,5/60	7026.200.26	03	
		Scoring saw blade	200	4,4-5,6	3,20	30	36	F con.	2/8,5/60	0026.200.30	01	
		Scoring saw blade	200	4,8-5,8	3,50	30	36	F con.	2/8,5/60	0026.200.32	01	
		Scoring saw blade	200	3,2-4,3	2,80	30	60	F con.		0026.200.31	01	
		Main saw blade	300	4,40	3,00	30	60	FFT	2/10/60	0224.300.30	01	
	»	Main saw blade	300	4,40	3,20	30	60	FT	NLK 2/13/94	2.0024.300.60.30	01	
		Main saw blade	305	3,20	2,20	30	60	FT		0021.305.29	01	
NEW	»	Main saw blade	305	4,40	3,20	30	60	FT	NLK 2/13/94	2.0024.305.60.30	01	
NEW	»	Main saw blade	350	4,25	3,20	30	72	FT	NLK 2/13/94	2.0024.350.72.30-B42	01	
		Main saw blade	350	4,25	3,20	30	72	FT	2/8,5/60	0024.350.33	01	
		Main saw blade	350	4,40	3,20	30	72	FT	2/8,5/60	0024.350.32	01	
	»	Main saw blade	350	4,40	3,20	30	72	FT	NLK 2/13/94	2.0024.350.72.30-B44	01	
		Main saw blade	400	4,40	3,20	30	60	FT		0024.400.31	01	
NEW	»	Main saw blade	400	4,25	3,20	30	72	FT	NLK 2/13/94	2.0024.400.72.30-B42	01	
		Postforming	400	4,25	3,20	30	72	FT	2/10/60	0024.400.03	01	
		Main saw blade	400	4,40	3,20	30	72	FT		0024.400.30	01	
		Main saw blade	400	4,40	3,20	30	72	FT	KS	0024.402.30	01	
		Main saw blade	400	4,40	3,20	30	72	FT		0124.400.30	01	
		Main saw blade	400	4,40	3,00	30	72	FFT		0224.400.30	01	
		Main saw blade	400	4,40	3,20	30	72	TT		0428.400.30	01	
NEW	»	Main saw blade	450	4,40	3,20	30	72	FT	NLK 2/13/94	2.0024.450.72.30	01	
		Main saw blade	450	4,40	3,20	30	72	FT	2/10/60	0024.450.30	01	
		Main saw blade	450	4,80	3,50	30	72	FT	2/8,5/60	0024.450.32	01	

Panel sizing circular saw blades
according to machines

= Diamond tipped = Cutting 2.0

	Machine type	D mm	B mm	b mm	d mm	Z	Tooth shape	NL mm	Order No.	PG	Price
	Schelling										
	Scoring saw blade	180	4,4-5,6	3,40	20	28	F con.		0026.180.20	01	
	Scoring saw blade	180	4,4-5,2	3,20	20	32	W con.		7026.180.21	03	
	Scoring saw blade	180	6,8-7,8	5,00	20	36	F con.		0026.180.34	01	
	Scoring saw blade	200	4,4-5,2	3,40	20	24	F con.	2/11/66	7026.200.24	03	
	Scoring saw blade	200	4,4-5,6	3,40	20	24	F con.	2/11/66	0026.200.22	01	
	Scoring saw blade	200	4,4-5,2	3,40	20	32	F con.	2/11/66	7026.200.20	03	
NEW	Scoring saw blade	200	5,0-5,8	3,50	20	32	F con.	2/11/66	7026.200.22	03	
NEW	Scoring saw blade	200	5,5-6,4	4,00	20	32	F con.	2/11/66	7026.200.23	03	
NEW	Scoring saw blade	200	6,2-7,0	4,20	20	32	F con.	2/11/66	7026.200.25	03	
	Scoring saw blade	200	3,7-4,5	2,80	20	36	F con.	2/11/66	0026.200.25	01	
	Scoring saw blade	200	3,7-4,5	2,80	20	36	F con.	2/11/66	7026.200.21	03	
	Scoring saw blade	200	4,4-5,6	3,40	20	36	F con.	2/11/66	0026.200.34	01	
	Scoring saw blade	200	4,4-5,6	3,40	20	36	W con.	2/11/66	0026.200.26	01	
	Scoring saw blade	200	5,0-5,8	3,50	20	36	F con.	2/11/66	0026.200.20	01	
	Scoring saw blade	200	5,5-6,6	3,80	20	36	F con.	2/11/66	0026.200.23	01	
	Scoring saw blade	200	6,2-7,2	4,20	20	36	F con.	2/11/66	0026.200.24	01	
NEW	Scoring saw blade	220	6,4-7,2	4,40	20	32	F con.		7026.220.20	03	
	Scoring saw blade	220	6,4-7,4	4,40	20	36	F con.		0026.220.20	01	
	Postforming	220	4,55	3,60	20	48	W	2/9/62	0026.220.21	01	
NEW	Scoring saw blade	300	3,7-4,5	3,20	30	32	F con.		7026.300.33	03	
NEW	Scoring saw blade	300	4,4-5,2	3,20	30	32	F con.		7026.300.30	03	
NEW	Scoring saw blade	300	3,7-4,5	2,80	30	36	F con.		0026.300.33	01	
	Postforming	300	4,4-5,2	3,20	30	36	F con.		0026.300.30	01	
	Postforming	300	4,4-5,2	3,20	30	48	W con.		0026.300.32	01	
	Postforming	300	4,55	3,20	30	72	W	2/11/73	0026.300.31	01	
	Main saw blade	350	4,40	3,20	30	54	W		0023.350.30	01	
	Main saw blade	350	4,40	3,20	30	54	FT	2/10/60	0024.350.30	01	
	Main saw blade	350	3,60	2,80	30	72	FT	2/10/60	2.0024C.350.72.30	01	
	Main saw blade	350	4,40	3,00	30	72	FT	2/10/60	0124.350.31	01	
	Main saw blade	350	4,40	3,00	30	72	FFT	2/10/60	0224.350.31	01	
	Main saw blade	350	4,40	3,00	30	72	FT	2/10/60	7024.350.05	03	
	Main saw blade	350	4,40	3,20	30	72	W		0023.350.31	01	
	Main saw blade	350	4,40	3,20	30	72	FT	2/10/60	0024.350.31	01	
	Main saw blade	350	4,40	3,20	30	72	TT	2/10/60	0428.350.30	01	

Panel sizing circular saw blades
according to machines

= Diamond tipped » = Cutting 2.0

		Machine type	D mm	B mm	b mm	d mm	Z	Tooth shape	NL mm	Order No.	PG	Price
		Main saw blade	355	4,40	3,20	30	72	FT	2/10/60	0024.355.29	01	
	»	Main saw blade	355	4,40	3,20	30	72	FT	NLK 2/13/94	2.0024.355.72.30	01	
	»	Main saw blade	360	4,40	3,20	30	72	FT	NLK 2/13/94	2.0024.360.72.30	01	
NEW	»	Main saw blade	370	4,40	3,20	30	72	FT	NLK 2/13/94	2.0024.370.72.30	01	
		Main saw blade	370	4,40	3,20	30	72	FT		0024.370.30	01	
	»	Main saw blade	400	4,40	3,20	30	72	FT	NLK 2/13/94	2.0024.400.72.30-B44	01	
		Main saw blade	430	4,40	3,20	30	72	W		0023.430.31	01	
		Main saw blade	450	4,40	3,20	30	54	W		0023.450.30	01	
NEW	»	Main saw blade	450	4,40	3,20	30	72	FT	NLK 2/13/94	2.0024.450.72.30	01	
		Main saw blade	450	4,40	3,20	30	72	W		0023.450.31	01	
		Main saw blade	450	4,40	3,20	30	72	FT	2/10/60	0024.450.30	01	
		Main saw blade	450	4,40	3,20	30	72	FFT	2/10/60	0224.450.30	01	
		Main saw blade	450	4,60	3,20	30	72	W	2/10/60	0023.450.32	01	
		Main saw blade	460	4,40	3,20	30	54	W	2/13/94	0023.460.30	01	
		Main saw blade	460	4,40	3,20	30	54	FT	2/13/94	0024.460.31	01	
		Main saw blade	460	4,40	3,20	30	72	FT	2/13/94	0024.460.30	01	
		Main saw blade	460	4,40	3,20	30	72	FFT	2/13/94	0224.460.30	01	
	»	Main saw blade	460	4,40	3,20	30	72	FT	NLK 2/13/94	2.0024.460.72.30	01	
NEW	»	Main saw blade	480	4,40	3,20	30	72	FT	NLK 2/13/94	2.0024.480.72.30	01	
		Main saw blade	480	4,40	3,20	30	72	FFT	2/13/94	0224.480.30	01	
		Main saw blade	480	4,40	3,20	30	80	FT		0024.480.30	01	
		Main saw blade	500	4,40	3,20	30	60	FT		0024.500.29	01	
	»	Main saw blade	500	4,40	3,20	30	60	FT	NLK 2/13/94	2.0024.500.60.30	01	
		Main saw blade	520	4,40	3,20	30	44	W	2/13/94	0023.520.30	01	
		Main saw blade	520	4,40	3,20	30	72	FT	2/13/94	0024.520.30	01	
NEW	»	Main saw blade	520	4,80	3,50	30	72	FT	NLK 2/13/94	2.0024.520.72.30	01	
NEW	»	Main saw blade	530	5,00	3,50	30	60	FT		2.0024B.530.60.30	01	
		Main saw blade	530	5,00	3,50	30	60	FT		0024.530.30	01	
NEW	»	Main saw blade	580	5,50	4,00	40	60	FT	2/13/114 2/13/122 2/13/140	2.0024B.580.60.40	01	
		Main saw blade	580	5,50	4,00	40	60	FT	2/13/122	0024.580.40	01	
		Main saw blade	620	6,20	4,00	40	60	FT	2/13/114 2/13/140	7024.620.40	03	
		Main saw blade	620	6,20	4,20	40	60	FT	2/13/114 2/13/140	0024.620.40	01	
		Main saw blade	670	6,20	4,20	40	60	FT	2/13/114 2/13/140	0024.670.40	01	

Panel sizing circular saw blades
according to machines

= Diamond tipped = Cutting 2.0

	Machine type	D mm	B mm	b mm	d mm	Z	Tooth shape	NL mm	Order No.	PG	Price
	Main saw blade	680	5,80	4,00	40	60	FT	2/13/114 2/13/140	7024.680.42	03	
	Main saw blade	680	6,20	4,00	40	60	FT	2/13/114 2/13/140	7024.680.41	03	
NEW	Main saw blade	680	6,20	4,20	40	60	FT	2/13/114 2/13/122 2/13/140	2.0024B.680.60.40	01	
NEW	Main saw blade	720	6,40	4,40	40	60	FT	2/13/114 2/13/122 2/13/140	2.0024B.720.60.40	01	
	Main saw blade	720	6,40	4,40	40	60	FT	2/14/114 2/14/140	0024.720.40	01	
	SCM Gabbiani										
	Scoring saw blade	125	4,4-5,2	3,40	20	24	F con.		7026.125.21	03	
	Scoring saw blade	125	4,4-5,6	3,40	20	24	F con.		0026.125.02	01	
NEW	Scoring saw blade	160	4,4-5,2	3,20	55	36	F con.	3/7/66	7026.160.55	03	
	Scoring saw blade	160	4,4-5,6	3,40	55	36	F con.	3/7/66	0026.160.55	01	
	Scoring saw blade	160	4,4-5,6	3,40	55	36	F con.	3/7/66	0026.160.55	01	
	Scoring saw blade	200	4,4-5,2	3,20	80	32	F con.	2/14/110	7026.200.83	03	
	Scoring saw blade	200	4,4-5,2	3,20	80	32	F con.	2/14/110	7026.200.83	03	
	Scoring saw blade	200	4,4-5,6	3,20	80	36	F con.	2/14/110	0026.200.80	01	
	Scoring saw blade	200	4,4-5,6	3,20	80	36	F con.	2/14/110	0026.200.80	01	
NEW	Main saw blade	300	4,40	3,20	80	60	FT	4/8,5/100 2/7/110 2/14/110	2.0024.300.60.80	01	
	Main saw blade	300	4,40	3,20	80	60	FT	4/8,5/100 2/7/110 2/14/110	0024.300.80	01	
	Postforming	300	4,60	3,20	80	72	W	2/14/110	0026.300.80	01	
	Postforming	300	4,60	3,20	80	72	W	2/14/110	0026.300.80	01	
	Main saw blade	305	4,40	3,00	80	54	W		0023.305.80	01	
NEW	Main saw blade	320	4,40	3,20	80	60	FT	4/8,5/100 2/7/110 2/14/110	2.0024.320.60.80	01	
	Main saw blade	320	4,40	3,20	80	60	FT	4/8,5/100 2/7/110 2/14/110	0024.320.80	01	
	Main saw blade	350	4,40	3,20	80	60	FT	2/14/110	0024.350.81	01	
	Main saw blade	350	4,40	3,20	80	60	FT	2/14/110	0024.350.81	01	
NEW	Main saw blade	350	4,40	3,20	80	72	FT	4/8,5/100 2/7/110 2/14/110	2.0024.350.72.80	01	
	Main saw blade	350	4,40	3,20	80	72	FT	2/14/110	0024.350.80	01	
	Main saw blade	350	4,40	3,20	80	72	FT	2/14/110	0024.350.80	01	
NEW	Main saw blade	355	4,40	3,20	80	72	FT	4/8,5/100 2/7/110 2/14/110	2.0024.355.72.80B	01	
	Main saw blade	355	4,40	3,20	80	72	FT	4/8,5/100 2/7/110 2/14/110	0024.355.81	01	

Panel sizing circular saw blades
according to machines

= Diamond tipped » = Cutting 2.0

	Machine type	D mm	B mm	b mm	d mm	Z	Tooth shape	NL mm	Order No.	PG	Price
	Main saw blade	355	4,40	3,20	80	72	W		0023.355.81	01	
	Main saw blade	380	4,40	3,20	80	72	FT	2/14/110	0024.380.80	01	
»	Main saw blade	380	4,40	3,20	80	72	FT	4/8,5/100 2/7/110 2/14/110	2.0024.380.72.80	01	
	Main saw blade	380	4,40	3,20	80	72	FT	2/14/110	0024.380.80	01	
»	Main saw blade	380	4,40	3,20	80	72	FT	4/8,5/100 2/7/110 2/14/110	2.0024.380.72.80	01	
	Main saw blade	400	4,40	3,20	80	60	FT	4/8,5/100 2/7/110 2/14/110	0024.400.83	01	
NEW »	Main saw blade	400	4,40	3,20	80	72	FT	4/8,5/100 2/7/110 2/14/110	2.0024.400.72.80B	01	
	Main saw blade	400	4,40	3,20	80	72	W		0023.400.81	01	
	Main saw blade	420	4,40	3,20	80	72	FT	2/14/110	0024.420.80	01	
	Main saw blade	420	4,40	3,20	80	72	FT	2/14/110	0024.420.80	01	
NEW »	Main saw blade	450	4,40	3,20	80	72	FT	4/8,5/100 2/7/110 2/14/110	2.0024.450.72.80-B44	01	
	Main saw blade	450	4,40	3,20	80	72	FT	4/8,5/100 2/7/110 2/14/110	0024.450.81	01	

Panel sizing circular saw blades

Panel sizing circular saw blades
Customer benefits

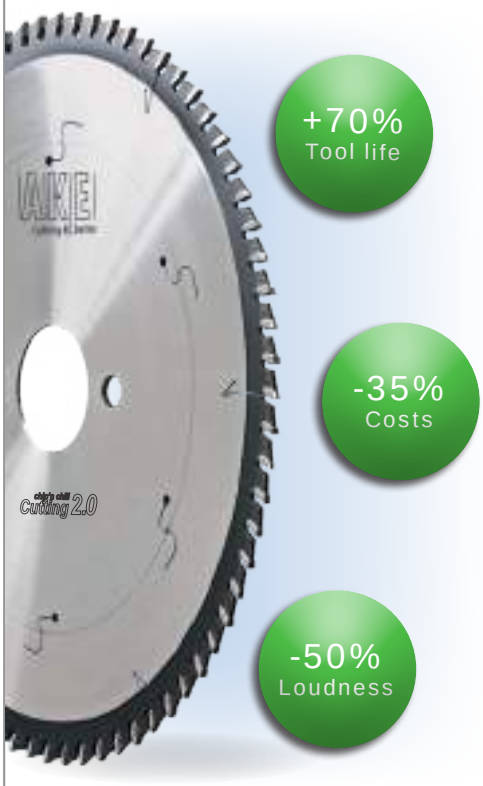

- Increase of tool life by up to 70%
- Total costs 35% lower compared to circular saw blades of other manufacturers
- Reduction of loudness by 50%
- Best finish-cut quality
  (= 100% of the test partners rating the cutting quality with “excellent” and “good”)
- Universal usage in all coated wood-based material
  (= optimally tailored for the daily mix of materials)

Thin-kerf version:
- -25% power consumption, -25% material usage

Chipboard

MDF

Multiplex

HPL

Conclusion:

Universal material usage ✓

\+ **Long tool life** ✓

\+ **Finish cut quality** ✓

= ***Panel sizing saw blade 2.0***

Please Note: Everything about the ***panel sizing saw blade 2.0*** is available at:
ake.de/en/panel-sizing-saw-blades-2-0

Panel sizing circular saw blades
The versions and their benefits

Product programme	*Thin-kerf version*	*Standard version*	*Standard version large diameters*
Type	2.0024C	2.0024	2.0024B
Cutting width range	3,2 - 4,0 mm	3,2 - 4,8 mm	4,8 - 7,0 mm
Diameter	300 - 430 mm	280 - 520 mm	521 - 730 mm
Product advantages main saw blade			
Sizing cut	+++	+++	+++
Finish cut quality	+++	+++	-
Noise reduction	+++	+++	+++
Increased tool life	+++	+++	+++
Economic efficiency	**++++** ✓	+++	+++
Sharpening cycles (in average)	17x	17x	17x
Reduction ...			
... of material waste by	**-25%** ✓	0%	0%
… of cutting width by	**-25%** ✓	0%	0%
… of power consumption by	**-25%** ✓	0%	0%
… of quantity of chips by	**-25%** ✓	0%	0%
Special feature			
Scorer	Other scorer necessary as a result of the cutting width	**Existing scorer can still be used** ✓	

Product features scorer	*Carbide metal*	*Diamond*
Available for	Thin cut & standard	Thin cut & standard
Costs per cut	€€	**€** ✓
Purchasing costs	**€** ✓	€€

2.0024 Panel sizing circular saw blade 2.0
Standard version

Application:	Sizing and finish cut with long service life
Material:	Plastic coated and film coated wood-based material, HPL
Machine:	Panel sizing units, horizontal with scoring aggregate
Design:	Noise reduced due to minimal gullets and new saw body design; ChipBelt®; reduced cutting pressure
Tooth:	Flat-triple-chip tooth, HW
Feed:	MEC

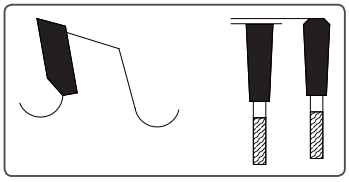

Further information:
ake.de/en/panel-sizing-saw-blades-2-0

	D mm	B mm	b mm	d mm	NL mm	Machine	Z	Tooth shape	Order No.	Price [PG 01]
NEW	280	3,2	2,2	30	NLK + 2/13/94	Panhans EURO 5	60	FT	2.0024.280.60.30	
	300	4,4	3,2	30	NLK + 2/13/94	Panhans ECOPAN, Panhans EURO P8	60	FT	2.0024.300.60.30	
NEW	300	4,4	3,2	60	2/14/100 + 2/11/115 + 2/19/120 + 2/14/125	Homag SAWTEQ B-130 (HPP 130)	60	FT	2.0024.300.60.60	
NEW	300	4,4	3,2	65	2/9/110	Biesse Selco EB 70	60	FT	2.0024.300.60.65	
NEW	300	4,4	3,2	75	2/9/110	Homag España CH 03	60	FT	2.0024.300.60.75	
NEW	300	4,4	3,2	80	4/8,5/100 + 2/7/110 + 2/14/110	SCM Gabbiani P 55, SCM Sigma Prima 50	60	FT	2.0024.300.60.80	
NEW	305	4,4	3,2	30	NLK + 2/13/94	Mayer PS 5	60	FT	2.0024.305.60.30	
NEW	305	4,4	3,2	30	NLK + 2/13/94	Panhans	60	FT	2.0024.305.60.30	
NEW	305	4,4	3,2	30	NLK + 2/13/94	Scheer PA 4136 & FM 16	60	FT	2.0024.305.60.30	
NEW	310	4,4	3,2	60	2/14/100 + 2/11/115 + 2/19/120 + 2/14/125	Homag SAWTEQ B-200 (HPP 200)	60	FT	2.0024.310.60.60	
	320	4,4	3,2	30	NLK + 2/13/94	Mayer PS 80 Felder Format 4 kappa automatic 60 & 80 & classic	60	FT	2.0024.320.60.30	
NEW	320	4,4	3,2	50	3/13/80 + 3/13/95	Giben Smart & Onix	60	FT	2.0024.320.60.50	
	320	4,4	3,2	65	2/9/110	Biesse Selco EB 75 & 80, Sektor 430 & 450	60	FT	2.0024.320.60.65	
NEW	320	4,4	3,2	75	3/13/95	Giben Smart	60	FT	2.0024.320.60.75	

0026 I 7026 I HW / DP scoring saw blade
for standard version

Application:	Scoring of laminated wood-based material, parallel feed; DP design for max. tool life and low costs per cut; HW design for low initial costs
Material:	Plastic laminated and film-coated wood-based material, HPL
Machine:	Panel sizing unit horizontal with scoring aggregate
Tooth:	Flat tooth conical (F con.), Alternate top bevel tooth (W), HW / DP
Feed:	MEC

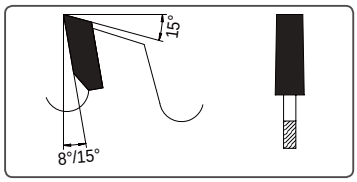

Fig.: Flat tooth conical (F con.)

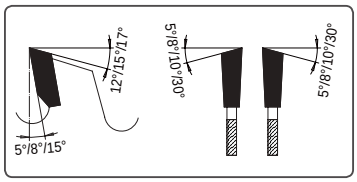

Fig.: Alternate top bevel tooth (W)

Type	D mm	B mm	b mm	d mm	NL mm	Z	Tooth shape	Order No.	PG	Price
HW Scoring saw blade	125	3,1-4,3	2,8	20		24	F con.	0026.125.03	01	
DP Scoring saw blade	125	3,1-3,9	2,2	20		24	F con.	7026.125.25	03	
HW Scoring saw blade	180	4,4-5,6	3,4	30	NLK	28	F con.	0026.180.30	01	
DP Scoring saw blade	180	4,4-5,2	3,2	30	NLK	28	F con.	7026.180.17	03	
HW Scoring saw blade	150	4,4-5,6	3,4	45		28	F con.	0026.150.45	01	
DP Scoring saw blade	150	4,4-5,2	3,4	45		28	F con.	7026.150.46	03	NEW
HW Scoring saw blade	200	4,4-5,6	3,2	65	2/9/100 + 2/9/110	36	F con.	0026.200.65	01	
HW Scoring saw blade	200	4,4-5,6	3,2	65	2/9/100 + 2/9/110	36	W con.	0026.200.67	01	
DP Scoring saw blade	200	4,4-5,2	3,5	65	2/9/100 + 2/9/110	32	F con.	7026.200.67	03	
HW Postforming	300	4,4-5,6	3,2	65	2/9/100 + 2/9/110	48	W con.	0026.300.69	01	
HW Postforming	300	4,6	3,2	65	2/9/100 + 2/9/110	72	W	0026.300.65	01	
HW Scoring saw blade	125	4,4-5,6	3,4	45		24	F con.	0026.125.45	01	
DP Scoring saw blade	125	4,4-5,2	3,2	45		24	F con.	7026.125.45	03	NEW
HW Scoring saw blade	160	4,4-5,6	3,4	55	3/7/66	36	F con.	0026.160.55	01	
DP Scoring saw blade	160	4,4-5,2	3,2	55	3/7/66	36	F con.	7026.160.55	03	NEW
HW Scoring saw blade	127	4,4-5,6	3,4	45		24	F con.	0026.127.02	01	
DP Scoring saw blade	127	4,4-5,2	3,4	45		24	F con.	7026.127.01	03	
HW Scoring saw blade	180	4,4-5,6	3,4	30	NLK	28	F con.	0026.180.30	01	
DP Scoring saw blade	180	4,4-5,2	3,2	30	NLK	28	F con.	7026.180.17	03	
HW Scoring saw blade	200	4,4-5,6	3,2	30	2/8,5/60	36	F con.	0026.200.30	01	
DP Scoring saw blade	200	4,4-5,2	3,5	30	2/8,5/60	36	F con.	7026.200.26	03	
HW Scoring saw blade	200	4,4-5,2	3,2	45		36	F con.	0026.200.51	01	
DP Scoring saw blade	200	4,4-5,2	3,5	45		32	F con.	7026.200.51	03	
HW Scoring saw blade	150	4,4-5,6	3,4	30		28	F con.	0026.150.06	01	
DP Scoring saw blade	150	4,4-5,2	3,2	30		28	F con.	7026.150.13	03	
HW Scoring saw blade	180	4,4-5,6	3,4	50	3/13/80	42	F con.	0026.180.50	01	
DP Scoring saw blade	180	4,4-5,2	3,2	50	3/13/80	42	F con.	7026.180.50	03	NEW
HW Scoring saw blade	200	4,4-5,6	3,2	65	2/9/100 + 2/9/110	36	F con.	0026.200.65	01	
HW Scoring saw blade	200	4,4-5,6	3,2	65	2/9/100 + 2/9/110	36	W con.	0026.200.67	01	
DP Scoring saw blade	200	4,4-5,2	3,5	65	2/9/100 + 2/9/110	32	F con.	7026.200.67	03	
HW Postforming	300	4,4-5,6	3,2	65	2/9/100 + 2/9/110	48	W con.	0026.300.69	01	
HW Postforming	300	4,6	3,2	65	2/9/100 + 2/9/110	72	W	0026.300.65	01	
HW Scoring saw blade	200	4,4-5,6	3,2	50	3/13/80	42	F con.	0026.201.50	01	
DP Scoring saw blade	200	4,4-5,2	3,2	50	3/13/80	42	F con.	7026.201.50	03	NEW

2.0024 Panel sizing circular saw blade 2.0
Standard version

	D mm	B mm	b mm	d mm	NL mm	Machine	Z	Tooth shape	Order No.	Price [PG 01]
NEW	320	4,4	3,2	80	4/8,5/100 + 2/7/110 + 2/14/110	SCM Gabbiani P 75 & PT 75, SCM Sigma Prima 67	60	FT	2.0024.320.60.80	
NEW	350	4,25	3,2	30	NLK + 2/13/94	Scheer PA 5500 & PA6000	72	FT	2.0024.350.72.30-B42	
TOP	350	4,4	3,2	30	NLK + 2/13/94	Holz-Her Tectra 6120 classic & Cut 70 & Cut 85 - 6210 & Cut 82 - 6110 & Cut 6120 & Cut 6320, Schelling S45, Panhans Polypan 47 & EURO P10 & EURO 12 & EURO 30 & 693 & ECOSTAR II & S45 ALL IN ONE	72	FT	2.0024.350.72.30-B44	
TOP	350	4,4	3,2	30	NLK + 2/13/94	Scheer PA 5500 & PA6000	72	FT	2.0024.350.72.30-B44	
TOP	350	4,4	3,2	30	NLK + 2/13/94	Schelling fh4 alt & fk4 alt & FM	72	FT	2.0024.350.72.30-B44	
TOP	350	4,4	3,2	60	2/14/100 + 2/11/115 + 2/19/120 + 2/14/125	Homag SAWTEQ B-300 (HPP 300) & HPP 350	72	FT	2.0024.350.72.60	
TOP	350	4,4	3,2	60	2/14/100 + 2/11/115 + 2/19/120 + 2/14/125	Homag SAWTEQ B-200 (HPP 200)	72	FT	2.0024.350.72.60	
NEW	350	4,4	3,2	75		Homag HPP 230 & HPP 250	72	FT	2.0024.350.72.75	
NEW	350	4,4	3,2	75		Homag España CH 04 & CH 05 & CH 06 & CH 08 & CH10 & CHP 30	72	FT	2.0024.350.72.75	
NEW	350	4,4	3,2	75		Giben MK Gamma	72	FT	2.0024.350.72.75	
NEW	350	4,4	3,2	80	4/8,5/100 + 2/7/110 + 2/14/110	SCM Sigma Prima 90, Gabbiani Galaxy 85 & Galaxy 90	72	FT	2.0024.350.72.80	
	355	4,4	3,2	30	NLK + 2/13/94	Mayer PS 80 Premium, Felder Format 4 kappa automatic 100	72	FT	2.0024.355.72.30	
	355	4,4	3,2	30	NLK + 2/13/94	Schelling FM	72	FT	2.0024.355.72.30	
NEW	355	4,4	3,2	65	2/9/110	Biesse Selco EB 95 & Sektor 470	72	FT	2.0024.355.72.65	
	355	4,4	3,2	75		Giben Trend	72	FT	2.0024.355.72.75	
NEW	355	4,4	3,2	80	4/19/120 + 2/9/130 + 4/11/130	Biesse Selco EB 90	72	FT	2.0024.355.72.80A	
NEW	355	4,4	3,2	80	4/8,5/100 + 2/7/110 + 2/14/110	Gabbiani Prima, SCM Alpha	72	FT	2.0024.355.72.80B	
	360	4,4	3,2	30	NLK + 2/13/94	Schelling fh4 new	72	FT	2.0024.360.72.30	

0026 I 7026 I HW / DP Scoring saw blade
for standard version

Type	D mm	B mm	b mm	d mm	NL mm	Z	Tooth shape	Order No.	PG	Price
HW Scoring saw blade	160	4,4-5,6	3,4	55	3/7/66	36	F con.	0026.160.55	01	
DP Scoring saw blade	160	4,4-5,2	3,2	55	3/7/66	36	F con.	7026.160.55	03	NEW
HW Scoring saw blade	350	4,4	3,2	30	NLK + 2/13/94	72	FT	2.0024.350.72.30-B42	01	
HW Scoring saw blade	180	4,4-5,6	3,4	30	NLK	28	F con.	0026.180.30	01	
DP Scoring saw blade	180	4,4-5,2	3,2	30	NLK	28	F con.	7026.180.17	03	
HW Scoring saw blade	200	4,4-5,6	3,2	30	2/8,5/60	36	F con.	0026.200.30	01	
DP Scoring saw blade	200	4,4-5,2	3,5	30	2/8,5/60	36	F con.	7026.200.26	03	
DP Scoring saw blade (till 2015)	300	4,4-5,2	3,2	30	2/11/73 + 2/13/94	36	F con.	0026.300.30	01	
HW Scoring saw blade (till 2015)	300	4,4-5,2	3,2	30	2/11/73 + 2/13/94	32	F con.	7026.300.30	03	NEW
HW Scoring saw blade	180	4,4-5,6	3,2	45		36	F con.	0026.180.45	01	
DP Scoring saw blade	180	4,4-5,2	3,2	45		32	F con.	7026.180.44	03	
HW Postforming	280	4,4-5,2	3,2	45		72	F con.	0026.280.47	01	
HW Scoring saw blade	200	4,4-5,2	3,2	45		36	F con.	0026.200.51	01	
DP Scoring saw blade	200	4,4-5,2	3,5	45		32	F con.	7026.200.51	03	
HW Scoring saw blade	200	4,4-5,2	3,2	45		36	F con.	0026.200.51	01	
DP Scoring saw blade	200	4,4-5,2	3,5	45		32	F con.	7026.200.51	03	
HW Scoring saw blade	150	4,4-5,6	3,4	45		28	F con.	0026.150.45	01	
DP Scoring saw blade	150	4,4-5,2	3,4	45		28	F con.	7026.150.46	03	NEW
HW Scoring saw blade	127	4,4-5,6	3,4	45		24	F con.	0026.127.02	01	
DP Scoring saw blade	127	4,4-5,2	3,4	45		24	F con.	7026.127.01	03	
HW Scoring saw blade	160	4,4-5,6	3,4	55	3/7/66	36	F con.	0026.160.55	01	
HW Scoring saw blade	200	4,4-5,6	3,2	80	2/14/110	36	F con.	0026.200.80	01	
DP Scoring saw blade	160	4,4-5,2	3,2	55	3/7/66	36	F con.	7026.160.55	03	NEW
DP Scoring saw blade	200	4,4-5,2	3,2	80	2/14/110	32	F con.	7026.200.83	03	
HW Postforming	300	4,6	3,2	80	2/14/110	72	W	0026.300.80	01	
HW Scoring saw blade	150	4,4-5,6	3,4	30		28	F con.	0026.150.06	01	
DP Scoring saw blade	150	4,4-5,2	3,2	30		28	F con.	7026.150.13	03	
HW Scoring saw blade	200	4,4-5,6	3,4	20	2/11/66	36	F con.	0026.200.34	01	
DP Scoring saw blade	200	4,4-5,2	3,4	20	2/11/66	32	F con.	7026.200.20	03	
HW Scoring saw blade	200	4,4-5,6	3,2	65	2/9/100 + 2/9/110	36	F con.	0026.200.65	01	
HW Scoring saw blade	200	4,4-5,6	3,2	65	2/9/100 + 2/9/110	36	W con.	0026.200.67	01	
DP Scoring saw blade	200	4,4-5,2	3,5	65	2/9/100 + 2/9/110	32	F con.	7026.200.67	03	
HW Postforming	300	4,4-5,6	3,2	65	2/9/100 + 2/9/110	48	W con.	0026.300.69	01	
HW Postforming	300	4,6	3,2	65	2/9/100 + 2/9/110	72	W	0026.300.65	01	
HW Scoring saw blade	127	4,4-5,6	3,4	45		24	F con.	0026.127.02	01	
DP Scoring saw blade	127	4,4-5,2	3,4	45		24	F con.	7026.127.01	03	
HW Scoring saw blade	200	4,4-5,6	3,2	65	2/9/100 + 2/9/110	36	F con.	0026.200.65	01	
HW Scoring saw blade	200	4,4-5,6	3,2	65	2/9/100 + 2/9/110	36	W con.	0026.200.67	01	
DP Scoring saw blade	200	4,4-5,2	3,5	65	2/9/100 + 2/9/110	32	F con.	7026.200.67	03	
HW Postforming	300	4,4-5,6	3,2	65	2/9/100 + 2/9/110	48	W con.	0026.300.69	01	
HW Postforming	300	4,6	3,2	65	2/9/100 + 2/9/110	72	W	0026.300.65	01	
HW Scoring saw blade	125	4,4-5,6	3,4	20		24	F con.	0026.125.02	01	
DP Scoring saw blade	125	4,4-5,2	3,4	20		24	F con.	7026.125.21	03	
HW Scoring saw blade (from 2015)	200	4,4-5,6	3,4	20	2/11/66	36	F con.	0026.200.34	01	
DP Scoring saw blade (from 2015)	200	4,4-5,2	3,4	20	2/11/66	32	F con.	7026.200.20	03	
HW Scoring saw blade (from 2017)	300	4,4-5,2	3,2	30	2/11/73 + 2/13/94	36	F con.	0026.300.30	01	
DP Scoring saw blade (from 2017)	300	4,4-5,2	3,2	30	2/11/73 + 2/13/94	32	F con.	7026.300.30	03	NEW

2.0024 Panel sizing circular saw blade 2.0
Standard version

	D mm	B mm	b mm	d mm	NL mm	Machine	Z	Tooth shape	Order No.	Price [PG 01]
	360	4,4	3,2	65	2/9/110	Biesse Selco EB 100	72	FT	2.0024.360.72.65	
NEW	360	4,4	3,2	75	4/15/105 + 2/7/110	Giben Starmatic 850	72	FT	2.0024.360.72.75	
NEW	370	4,4	3,2	30	NLK + 2/13/94	Schelling FM	72	FT	2.0024.370.72.30	
NEW	380	4,4	3,2	30	NLK + 2/13/94	Holz-Her Tectra 6120 Power & Dynamic & Lift, Holz-Her Zentrex 6220 Classic	72	FT	2.0024.380.72.30	
NEW	380	4,4	3,2	50	4/13/80	Giben ONIX 105	72	FT	2.0024.380.72.50	
TOP	380	4,4	3,2	60	2/14/100 + 2/11/115 + 2/19/120 + 2/14/125	Homag SAWTEQ B-300 (HPP 300)	72	FT	2.0024.380.72.60-B44	
TOP	380	4,4	3,2	60	2/14/100 + 2/11/115 + 2/19/120 + 2/14/125	Homag HPP 180	72	FT	2.0024.380.72.60-B44	
TOP	380	4,8	3,5	60	2/14/100 + 2/11/115 + 2/19/120 + 2/14/125	Homag SAWTEQ B-300 (HPP 300)	72	FT	2.0024.380.72.60-B48	
TOP	380	4,8	3,5	60	2/14/100 + 2/11/115 + 2/19/120 + 2/14/125	Homag HPP 180	72	FT	2.0024.380.72.60-B48	
NEW	380	4,4	3,2	65	2/9/110	Biesse Selco WN 610	72	FT	2.0024.380.72.65	
NEW	380	4,4	3,2	75	4/15/105 + 2/7/110	Giben	72	FT	2.0024.380.72.75	
	380	4,4	3,2	80	4/8,5/100 + 2/7/110 + 2/14/110	SCM GABBIANI S 95, Gabbiani Galaxy 105 & Axioma 105 & Flexima 105 & Crossflex 105, SCM SIGMA IMPACT 90/105/107 & SCM SIGMA PLUS 105	72	FT	2.0024.380.72.80	
NEW	400	4,25	3,2	30		Scheer FM 14	72	FT	2.0024.400.72.30-B42	
	400	4,4	3,2	30	NLK + 2/13/94	Mayer PS 100	72	FT	2.0024.400.72.30-B44	
	400	4,4	3,2	30	NLK + 2/13/94	Holz-Her Zentrex 6215 Power & Dynamic & Lift & CUT 110 - 6310	72	FT	2.0024.400.72.30-B44	
	400	4,4	3,2	30	NLK + 2/13/94	Schelling fh5 & fk4 new	72	FT	2.0024.400.72.30-B44	
NEW	400	4,4	3,2	60	2/11/85	Anthon LN	72	FT	2.0024.400.72.60	
NEW	400	4,8	3,5	65	2/9/110	Biesse Selco WN 630	72	FT	2.0024.400.72.65	
NEW	400	4,4	3,2	75	4/15/105 + 2/7/110	Homag España CH 12	72	FT	2.0024.400.72.75	

0026 I 7026 I HW / DP Scoring saw blade
for standard version

Type	D mm	B mm	b mm	d mm	NL mm	Z	Tooth shape	Order No.	PG	Price
HW Scoring saw blade	200	4,4-5,6	3,2	65	2/9/100 + 2/9/110	36	F con.	0026.200.65	01	
HW Scoring saw blade	200	4,4-5,6	3,2	65	2/9/100 + 2/9/110	36	W con.	0026.200.67	01	
DP Scoring saw blade	200	4,4-5,2	3,5	65	2/9/100 + 2/9/110	32	F con.	7026.200.67	03	
HW Postforming	300	4,4-5,6	3,2	65	2/9/100 + 2/9/110	48	W con.	0026.300.69	01	
HW Postforming	300	4,6	3,2	65	2/9/100 + 2/9/110	72	W	0026.300.65	01	
HW Scoring saw blade	160	4,4-5,6	3,2	45	3/11/70	28	F con.	0026.160.45	01	
DP Scoring saw blade	160	4,4-5,2	3,2	45	3/11/70	28	F con.	7026.160.45	03	NEW
HW Scoring saw blade	200	4,4-5,6	3,4	20	2/11/66	36	F con.	0026.200.34	01	
DP Scoring saw blade	200	4,4-5,2	3,4	20	2/11/66	32	F con.	7026.200.20	03	
HW Scoring saw blade	180	4,4-5,6	3,4	30	NLK	28	F con.	0026.180.30	01	
DP Scoring saw blade	180	4,4-5,2	3,2	30	NLK	28	F con.	7026.180.17	03	
HW Scoring saw blade	180	4,4-5,6	3,4	50	3/13/80	42	F con.	0026.180.50	01	
DP Scoring saw blade	180	4,4-5,2	3,2	50	3/13/80	42	F con.	7026.180.50	03	NEW
HW Scoring saw blade	180	4,4-5,6	3,2	45		36	F con.	0026.180.45	01	
DP Scoring saw blade	180	4,4-5,2	3,2	45		32	F con.	7026.180.44	03	
HW Scoring saw blade	200	4,4-5,2	3,2	45		36	F con.	0026.200.51	01	
DP Scoring saw blade	200	4,4-5,2	3,5	45		32	F con.	7026.200.51	03	
HW Scoring saw blade	180	4,8-5,8	3,5	45		36	F con.	0026.181.45	01	
DP Scoring saw blade	180	4,8-5,6	3,5	45		32	F con.	7026.180.46	03	
HW Postforming	280	5,0	3,5	45		84	W	0026.280.45	01	
HW Postforming	280	4,8-5,8	3,5	45		72	W con.	0026.280.46	01	
HW Scoring saw blade	200	4,8-5,8	3,5	45		36	F con.	0026.200.45	01	
DP Scoring saw blade	200	4,8-5,6	3,5	45		32	F con.	7026.200.46	03	
HW Scoring saw blade	200	4,8-5,8	3,5	65	2/9/100 + 2/9/110	36	F con.	0026.200.66	01	
DP Scoring saw blade	200	4,8-5,8	3,5	65	2/9/100 + 2/9/110	32	F con.	7026.200.68	03	
HW Postforming	300	4,8-5,6	3,5	65	2/9/100 + 2/9/110	48	W con.	0026.300.67	01	
HW Postforming	350	5,0	3,5	65	2/9/100 + 2/9/110	72	W	0026.350.65	01	
HW Scoring saw blade	190	4,4-5,6	3,2	50	2/7/80	36	F con.	0026.190.52	01	NEW
HW Scoring saw blade	215	4,4-5,6	3,2	50	2/7/80 + 3/15/80	42	F con.	0026.215.50	01	
DP Scoring saw blade	190	4,4-5,2	3,2	50	2/7/80	32	F con.	7026.190.52	03	NEW
DP Scoring saw blade	215	4,4-5,2	3,2	50	2/7/80 + 3/15/80	42	F con.	7026.215.50	03	
HW Scoring saw blade	160	4,4-5,6	3,4	55	3/7/66	36	F con.	0026.160.55	01	
HW Scoring saw blade	200	4,4-5,6	3,2	80	2/14/110	36	F con.	0026.200.80	01	
DP Scoring saw blade	160	4,4-5,2	3,2	55	3/7/66	36	F con.	7026.160.55	03	NEW
DP Scoring saw blade	200	4,4-5,2	3,2	80	2/14/110	32	F con.	7026.200.83	03	
HW Postforming	300	4,6	3,2	80	2/14/110	72	W	0026.300.80	01	
HW Scoring saw blade	400	4,4	3,2	30	NLK + 2/13/94	72	FT	2.0024.400.72.30-B44	01	
HW Scoring saw blade	150	4,4-5,6	3,4	30		28	F con.	0026.150.06	01	
DP Scoring saw blade	150	4,4-5,2	3,2	30		28	F con.	7026.150.13	03	
HW Scoring saw blade	180	4,4-5,6	3,4	30	NLK	28	F con.	0026.180.30	01	
DP Scoring saw blade	180	4,4-5,2	3,2	30	NLK	28	F con.	7026.180.17	03	
HW Scoring saw blade	200	4,4-5,6	3,4	20	2/11/66	36	F con.	0026.200.34	01	
DP Scoring saw blade	200	4,4-5,2	3,4	20	2/11/66	32	F con.	7026.200.20	03	
HW Scoring saw blade	180	4,4-5,2	3,4	20	2/9/60	28	F con.	0026.180.20	01	
DP Scoring saw blade	180	4,4-5,2	3,2	20	2/9/60	32	W con.	7026.180.21	03	
HW Scoring saw blade	200	4,8-5,8	3,5	65	2/9/100 + 2/9/110	36	F con.	0026.200.66	01	
DP Scoring saw blade	200	4,8-5,8	3,5	65	2/9/100 + 2/9/110	32	F con.	7026.200.68	03	
HW Postforming	300	4,8-5,6	3,5	65	2/9/100 + 2/9/110	48	W con.	0026.300.67	01	
HW Postforming	350	5,0	3,5	65	2/9/100 + 2/9/110	72	W	0026.350.65	01	
HW Scoring saw blade	150	4,4-5,6	3,4	45		28	F con.	0026.150.45	01	
DP Scoring saw blade	150	4,4-5,2	3,4	45		28	F con.	7026.150.46	03	NEW

2.0024 Panel sizing circular saw blade 2.0
Standard version

	D mm	B mm	b mm	d mm	NL mm	Machine	Z	Tooth shape	Order No.	Price [PG 01]
NEW	400	4,4	3,2	75	4/15/105 + 2/7/110	Giben Starmatic 850	72	FT	2.0024.400.72.75	
NEW	400	4,4	3,2	75	4/15/105 + 2/7/110	Giben Prismatic H100, Giben Starmatic 1000	72	FT	2.0024.400.72.75	
	400	4,4	3,2	80	4/19/120 + 2/9/130 + 4/11/130	Biesse Selco EB 108 & EB 110	72	FT	2.0024.400.72.80A	
NEW	400	4,4	3,2	80	4/8,5/100 + 2/7/110 + 2/14/110	SCM Gabbiani S 115 & ST 115, Gabbiani Class & Galaxy 115, SCM Delta	72	FT	2.0024.400.72.80B	
NEW	400	4,4	3,2	80	4/8,5/100 + 2/7/110 + 2/14/110	SCM Sigma Impact 110, Gabbiani Galay 3 110	72	FT	2.0024.400.72.80B	
	420	4,8	3,5	60	2/14/100 + 2/11/115 + 2/19/120 + 2/14/125	Homag SAWTEQ B-400 (HPP 400)	72	FT	2.0024.420.72.60	
NEW	430	4,4	3,2	30	NLK + 2/13/94	Holz-Her Zentrex 6220 Performance & Dynamic & Lift	72	FT	2.0024.430.72.30	
NEW	430	4,4	3,2	60	2/11/85	Anthon LNA	72	FT	2.0024.430.72.60	
NEW	430	4,8	3,5	65	2/9/110	Biesse Selco WN 650	72	FT	2.0024.430.72.65	
NEW	430	4,8	3,5	70	4/19/120 + 2/9/130 + 4/11/130	Biesse Selco WN 710	72	FT	2.0024.430.72.70	
NEW	430	4,4	3,2	75	4/15/105 + 2/7/110	Giben Starmatic 1000	72	FT	2.0024.430.72.75	
	430	4,4	3,2	80	4/19/120 + 2/9/130 + 4/11/130	Biesse Selco EB 120 & WN 125	72	FT	2.0024.430.72.80	
NEW	450	4,4	3,2	30	NLK + 2/13/94	Mayer PS 2 Z	72	FT	2.0024.450.72.30	
NEW	450	4,4	3,2	30	NLK + 2/13/94	Panhans 604/608, Scheer PA 7000	72	FT	2.0024.450.72.30	
NEW	450	4,4	3,2	30	NLK + 2/13/94	Schelling FM	72	FT	2.0024.450.72.30	
	450	4,4	3,2	60	2/14/100 + 2/11/115 + 2/19/120 + 2/14/125	Homag SAWTEQ B-400 (HPP 400)	72	FT	2.0024.450.72.60-B44	

0026 / 7026 HW / DP Scoring saw blade
for standard version

Type	D mm	B mm	b mm	d mm	NL mm	Z	Tooth shape	Order No.	PG	Price
HW Scoring saw blade	160	4,4-5,6	3,2	45	3/11/70	28	F con.	0026.160.45	01	
DP Scoring saw blade	160	4,4-5,2	3,2	45	3/11/70	28	F con.	7026.160.45	03	NEW
HW Scoring saw blade	215	4,4-5,6	3,2	50	2/7/80 + 3/15/80	42	F con.	0026.215.50	01	
DP Scoring saw blade	215	4,4-5,2	3,2	50	2/7/80 + 3/15/80	42	F con.	7026.215.50	03	
HW Scoring saw blade	200	4,4-5,6	3,2	65	2/9/100 + 2/9/110	36	F con.	0026.200.65	01	
HW Scoring saw blade	200	4,4-5,6	3,2	65	2/9/100 + 2/9/110	36	W con.	0026.200.67	01	
DP Scoring saw blade	200	4,4-5,2	3,5	65	2/9/100 + 2/9/110	32	F con.	7026.200.67	03	
HW Postforming	300	4,4-5,6	3,2	65	2/9/100 + 2/9/110	48	W con.	0026.300.69	01	
HW Postforming	300	4,6	3,2	65	2/9/100 + 2/9/110	72	W	0026.300.65	01	
HW Scoring saw blade	125	4,4-5,6	3,4	20		24	F con.	0026.125.02	01	
HW Scoring saw blade	160	4,4-5,6	3,4	55	3/7/66	36	F con.	0026.160.55	01	
DP Scoring saw blade	125	4,4-5,2	3,4	20		24	F con.	7026.125.21	03	
DP Scoring saw blade	160	4,4-5,2	3,2	55	3/7/66	36	F con.	7026.160.55	03	NEW
HW Scoring saw blade	160	4,4-5,6	3,4	55	3/7/66	36	F con.	0026.160.55	01	
HW Scoring saw blade	200	4,4-5,6	3,2	80	2/14/110	36	F con.	0026.200.80	01	
DP Scoring saw blade	160	4,4-5,2	3,2	55	3/7/66	36	F con.	7026.160.55	03	NEW
DP Scoring saw blade	200	4,4-5,2	3,2	80	2/14/110	32	F con.	7026.200.83	03	
HW Postforming	300	4,6	3,2	80	2/14/110	72	W	0026.300.80	01	
HW Scoring saw blade	180	4,8-5,8	3,5	45		36	F con.	0026.181.45	01	
DP Scoring saw blade	180	4,8-5,6	3,5	45		32	F con.	7026.180.46	03	
HW Postforming	280	5,0	3,5	45		84	W	0026.280.45	01	
HW Postforming	280	4,8-5,8	3,5	45		72	W con.	0026.280.46	01	
HW Scoring saw blade	180	4,4-5,6	3,4	30	NLK	28	F con.	0026.180.30	01	
DP Scoring saw blade	180	4,4-5,2	3,2	30	NLK	28	F con.	7026.180.17	03	
HW Scoring saw blade	180	4,4-5,2	3,4	20	2/9/60	28	F con.	0026.180.20	01	
DP Scoring saw blade	180	4,4-5,2	3,2	20	2/9/60	32	W con.	7026.180.21	03	
HW Scoring saw blade	200	4,8-5,8	3,5	65	2/9/100 + 2/9/110	36	F con.	0026.200.66	01	
DP Scoring saw blade	200	4,8-5,8	3,5	65	2/9/100 + 2/9/110	32	F con.	7026.200.68	03	
HW Postforming	300	4,8-5,6	3,5	65	2/9/100 + 2/9/110	48	W con.	0026.300.67	01	
HW Postforming	350	5,0	3,5	65	2/9/100 + 2/9/110	72	W	0026.350.65	01	
HW Scoring saw blade	200	4,8-5,8	3,5	65	2/9/100 + 2/9/110	36	F con.	0026.200.66	01	
DP Scoring saw blade	200	4,8-5,8	3,5	65	2/9/100 + 2/9/110	32	F con.	7026.200.68	03	
HW Postforming	300	4,8-5,6	3,5	65	2/9/100 + 2/9/110	48	W con.	0026.300.67	01	
HW Postforming	350	5,0	3,5	65	2/9/100 + 2/9/110	72	W	0026.350.65	01	
HW Scoring saw blade	215	4,4-5,6	3,2	50	2/7/80 + 3/15/80	42	F con.	0026.215.50	01	
DP Scoring saw blade	215	4,4-5,2	3,2	50	2/7/80 + 3/15/80	42	F con.	7026.215.50	03	
HW Scoring saw blade	200	4,4-5,6	3,2	65	2/9/100 + 2/9/110	36	F con.	0026.200.65	01	
HW Scoring saw blade	200	4,4-5,6	3,2	65	2/9/100 + 2/9/110	36	W con.	0026.200.67	01	
DP Scoring saw blade	200	4,4-5,2	3,5	65	2/9/100 + 2/9/110	32	F con.	7026.200.67	03	
HW Postforming	300	4,4-5,6	3,2	65	2/9/100 + 2/9/110	48	W con.	0026.300.69	01	
HW Postforming	300	4,6	3,2	65	2/9/100 + 2/9/110	72	W	0026.300.65	01	
HW Scoring saw blade	150	4,4-5,6	3,4	30		28	F con.	0026.150.06	01	
DP Scoring saw blade	150	4,4-5,2	3,2	30		28	F con.	7026.150.13	03	
HW Scoring saw blade	180	4,4-5,6	3,4	30	NLK	28	F con.	0026.180.30	01	
HW Scoring saw blade	200	4,4-5,6	3,2	30	2/8,5/60	36	F con.	0026.200.30	01	
DP Scoring saw blade	180	4,4-5,2	3,2	30	NLK	28	F con.	7026.180.17	03	
DP Scoring saw blade	200	4,4-5,2	3,5	30	2/8,5/60	36	F con.	7026.200.26	03	
HW Scoring saw blade	200	4,4-5,6	3,4	20	2/11/66	36	F con.	0026.200.34	01	
DP Scoring saw blade	200	4,4-5,2	3,4	20	2/11/66	32	F con.	7026.200.20	03	
HW Scoring saw blade	180	4,4-5,6	3,2	45		36	F con.	0026.180.45	01	
DP Scoring saw blade	180	4,4-5,2	3,2	45		32	F con.	7026.180.44	03	

2.0024 Panel sizing circular saw blade 2.0

Standard version

	D mm	B mm	b mm	d mm	NL mm	Machine	Z	Tooth shape	Order No.	Price [PG 01]
TOP	450	4,8	3,5	60	2/14/100 + 2/11/115 + 2/19/120 + 2/14/125	Homag SAWTEQ B-400 (HPP 400)	72	FT	2.0024.450.72.60-B48	
NEW	450	4,4	3,2	75	4/15/105 + 2/7/110	Giben	72	FT	2.0024.450.72.75	
NEW	450	4,4	3,2	80	4/8,5/100 + 2/7/110 + 2/14/110	Gabbiani Elite & Galaxy 140	72	FT	2.0024.450.72.80-B44	
TOP	450	4,8	3,5	80	4/19/120 + 2/9/130 + 4/11/130	Biesse Selco WN 200 & WN 600/132	72	FT	2.0024.450.72.80-B48	
	460	4,4	3,2	30	NLK + 2/13/94	Schelling fh6 & ah6 & ch6 old	72	FT	2.0024.460.72.30	
NEW	470	4,8	3,5	70	4/19/120 + 2/9/130 + 4/11/130	Biesse Selco WN 730	72	FT	2.0024.470.72.70	
NEW	470	4,8	3,5	75	4/15/105 + 2/7/110	Giben Prismatic 3 & Tetramatic	72	FT	2.0024.470.72.75	
NEW	480	4,4	3,2	30	NLK + 2/13/94	Schelling fh6 & ah6 & ch6 new	72	FT	2.0024.480.72.30	
	480	4,8	3,5	60	2/14/100 + 2/11/115 + 2/19/120 + 2/14/125	Homag HPP 530	72	FT	2.0024.480.72.60	
NEW	480	4,8	3,5	70	4/19/120 + 2/9/130 + 4/11/130	Biesse Selco WN 750	72	FT	2.0024.480.72.70	
NEW	480	4,8	3,5	80	4/19/120 + 2/9/130 + 4/11/130	Biesse Selco WN 512 & WN 600/145	72	FT	2.0024.480.72.80	
NEW	500	4,8	3,5	60	2/14/100 + 2/11/115 + 2/19/120 + 2/14/125	Homag HPL 22	72	FT	2.0024.500.72.60	
NEW	510	4,8	3,5	80	4/19/120 + 2/9/130 + 4/11/130	Biesse Selco WNA 600/162	72	FT	2.0024.510.72.80	
NEW	520	4,8	3,5	30	NLK + 2/13/94	Schelling fh8 & ah8 & ch8	72	FT	2.0024.520.72.30	
NEW	520	4,8	3,5	60	2/14/100 + 2/11/115 + 2/19/120 + 2/14/125	Homag SAWTEQ B-500 (HPP 500) & HPP 23 & HPP 550	72	FT	2.0024.520.72.60	
NEW	520	4,8	3,5	70	4/19/120 + 2/9/130 + 4/11/130	Biesse Selco WN 750	72	FT	2.0024.520.72.70	

0026 I 7026 I HW / DP Scoring saw blade
for standard version

Type	D mm	B mm	b mm	d mm	NL mm	Z	Tooth shape	Order No.	PG	Price
HW Scoring saw blade	180	4,8-5,8	3,5	45		36	F con.	0026.181.45	01	
DP Scoring saw blade	180	4,8-5,6	3,5	45		32	F con.	7026.180.46	03	
HW Postforming	280	5,0	3,5	45		84	W	0026.280.45	01	
HW Postforming	280	4,8-5,8	3,5	45		72	W con.	0026.280.46	01	
					Depending machines					
HW Scoring saw blade	160	4,4-5,6	3,4	55	3/7/66	36	F con.	0026.160.55	01	
HW Scoring saw blade	200	4,4-5,6	3,2	80	2/14/110	36	F con.	0026.200.80	01	
DP Scoring saw blade	160	4,4-5,2	3,2	55	3/7/66	36	F con.	7026.160.55	03	NEW
DP Scoring saw blade	200	4,4-5,2	3,2	80	2/14/110	32	F con.	7026.200.83	03	
HW Postforming	300	4,6	3,2	80	2/14/110	72	W	0026.300.80	01	
HW Scoring saw blade	200	4,8-5,8	3,5	65	2/9/100 + 2/9/110	36	F con.	0026.200.66	01	
DP Scoring saw blade	200	4,8-5,8	3,5	65	2/9/100 + 2/9/110	32	F con.	7026.200.68	03	
HW Scoring saw blade	200	4,4-5,6	3,4	20	2/11/66	36	F con.	0026.200.34	01	
DP Scoring saw blade	200	4,4-5,2	3,4	20	2/11/66	32	F con.	7026.200.20	03	
HW Postforming	220	4,55	3,6	20	2/9/62	48	W AW	0026.220.21	01	
HW Scoring saw blade	200	4,8-5,8	3,5	65	2/9/100 + 2/9/110	36	F con.	0026.200.66	01	
DP Scoring saw blade	200	4,8-5,8	3,5	65	2/9/100 + 2/9/110	32	F con.	7026.200.68	03	
HW Postforming	300	4,8-5,6	3,5	65	2/9/100 + 2/9/110	48	W con.	0026.300.67	01	
HW Postforming	350	5,0	3,5	65	2/9/100 + 2/9/110	72	W	0026.350.65	01	
HW Scoring saw blade	215	4,8-5,8	3,5	50	2/7/80	42	F con.	0026.215.51	01	NEW
DP Scoring saw blade	215	4,8-5,6	3,5	50	2/7/80	42	F con.	7026.215.51	03	NEW
HW Scoring saw blade	200	4,4-5,6	3,4	20	2/11/66	36	F con.	0026.200.34	01	
DP Scoring saw blade	200	4,4-5,2	3,4	20	2/11/66	32	F con.	7026.200.20	03	
HW Postforming	220	4,55	3,6	20	2/9/62	48	W AW	0026.220.21	01	
HW Scoring saw blade	200	4,8-5,8	3,5	45		36	F con.	0026.200.45	01	
DP Scoring saw blade	200	4,8-5,6	3,5	45		32	F con.	7026.200.46	03	
HW Postforming	340	5,0	3,5	45	3/14/65	108	W	0026.341.49	01	
HW Scoring saw blade	200	4,8-5,8	3,5	65	2/9/100 + 2/9/110	36	F con.	0026.200.66	01	
DP Scoring saw blade	200	4,8-5,8	3,5	65	2/9/100 + 2/9/110	32	F con.	7026.200.68	03	
HW Postforming	300	4,8-5,6	3,5	65	2/9/100 + 2/9/110	48	W con.	0026.300.67	01	
HW Postforming	350	5,0	3,5	65	2/9/100 + 2/9/110	72	W	0026.350.65	01	
HW Scoring saw blade	200	4,8-5,8	3,5	65	2/9/100 + 2/9/110	36	F con.	0026.200.66	01	
DP Scoring saw blade	200	4,8-5,8	3,5	65	2/9/100 + 2/9/110	32	F con.	7026.200.68	03	
HW Postforming	300	4,6	3,2	65	2/9/100 + 2/9/110	72	W	0026.300.65	01	
HW Scoring saw blade	200	4,8-5,8	3,5	45		36	F con.	0026.200.45	01	
DP Scoring saw blade	200	4,8-5,6	3,5	45		32	F con.	7026.200.46	03	
HW Postforming	340	5,0	3,5	45	3/14/65	108	W	0026.341.49	01	
HW Scoring saw blade	200	4,8-5,8	3,5	65	2/9/100 + 2/9/110	36	F con.	0026.200.66	01	
DP Scoring saw blade	200	4,8-5,8	3,5	65	2/9/100 + 2/9/110	32	F con.	7026.200.68	03	
HW Postforming	300	4,6	3,2	65	2/9/100 + 2/9/110	72	W	0026.300.65	01	
HW Scoring saw blade	200	5,0-5,8	3,5	20	2/11/66	36	F con.	0026.200.20	01	
DP Scoring saw blade	200	5,0-5,8	3,5	20	2/11/66	32	F con.	7026.200.22	03	NEW
HW Scoring saw blade	200	4,8-5,8	3,5	45		36	F con.	0026.200.45	01	
DP Scoring saw blade	200	4,8-5,6	3,5	45		32	F con.	7026.200.46	03	
HW Postforming	340	5,0	3,5	45	3/14/65	108	W	0026.341.49	01	
HW Scoring saw blade	200	4,8-5,8	3,5	65	2/9/100 + 2/9/110	36	F con.	0026.200.66	01	
DP Scoring saw blade	200	4,8-5,8	3,5	65	2/9/100 + 2/9/110	32	F con.	7026.200.68	03	
HW Postforming	300	4,8-5,6	3,5	65	2/9/100 + 2/9/110	48	W con.	0026.300.67	01	
HW Postforming	350	5,0	3,5	65	2/9/100 + 2/9/110	72	W	0026.350.65	01	

2.0024 Panel sizing circular saw blade 2.0

Special dimensions

Application:	Sizing and finish cut with long service life
Material:	Plastic coated and film coated wood-based material, HPL
Machine:	Panel sizing units, horizontal with scoring aggregate
Design:	Noise reduced due to minimal gullets and new saw body design; ChipBelt®; reduced cutting pressure
Tooth:	Flat-triple-chip tooth (FT), Triple-chip tooth (T), HW
Feed:	MEC

Further information:
ake.de/en/panel-sizing-saw-blades-2-0

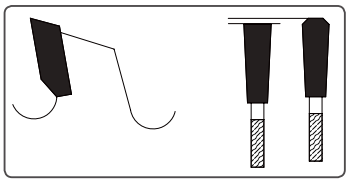

Fig.: Flat-triple-chip tooth (FT)

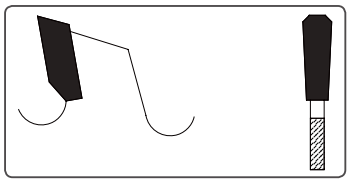

Fig.: Triple-chip tooth (T)

	D mm	B mm	b mm	d mm	NL mm	Machine	Z	Tooth-form	Order No.	Price [PG 01]
	308	3,2	2,4	60	2/14/100	Homag SAWTEQ B-320 flexTec (HPS 320 flexTec)	96	T	2.0024.308.96.60	
NEW	380	4,8	3,5	60	2/14/100 + 2/11/115 + 2/19/120 + 2/14/125	Homag SAWTEQ B-300 (HPP 300)	84	FT	2.0024.380.84.60	
NEW	380	4,8	3,5	60	2/14/100 + 2/11/115 + 2/19/120 + 2/14/125	Homag HPP 180	84	FT	2.0024.380.84.60	
NEW	470	4,4	3,2	75	4/15/105 + 2/7/110	Giben Prismatic 3 & Tetramatic	96	FT	2.0024.470.96.75	
NEW	500	4,4	3,2	30	NLK + 2/13/94	Schelling	60	FT	2.0024.500.60.30	

0026 / 7026 HW / DP Scoring saw blade
for special dimensions

Application:	Scoring of laminated wood-based material, parallel feed; DP design for max. tool life and low costs per cut; HW design for low initial costs
Material:	Plastic laminated and film-coated wood-based material, HPL
Machine:	Panel sizing unit horizontal with scoring aggregate
Tooth:	Flat tooth conical (F con.), Alternate top bevel tooth (W), HW / DP
Feed:	MEC

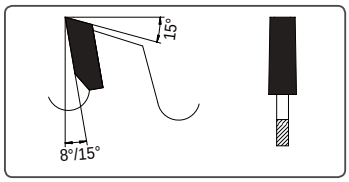

Fig.: Flat tooth conical (F con.)

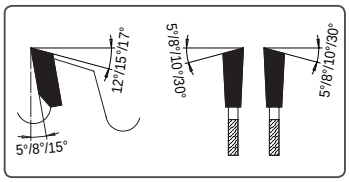

Fig.: Alternate top bevel tooth (W)

Type	D mm	B mm	b mm	d mm	NL mm	Z	Tooth	Order No.	PG	Price
HW Scoring saw blade	220	3,3-4,1	2,4	45		60	F con.	0026.220.46	01	
HW Postforming	280	3,4	2,4	45		60	W	0026.280.48	01	
HW Scoring saw blade	180	4,8-5,8	3,5	45		36	F con.	0026.181.45	01	
DP Scoring saw blade	180	4,8-5,6	3,5	45		32	F con.	7026.180.46	03	
HW Postforming	280	5,0	3,5	45		84	W	0026.280.45	01	
HW Postforming	280	4,8-5,8	3,5	45		72	W con.	0026.280.46	01	
HW Scoring saw blade	200	4,8-5,8	3,5	45		36	F con.	0026.200.45	01	
DP Scoring saw blade	200	4,8-5,6	3,5	45		32	F con.	7026.200.46	03	
HW Scoring saw blade	215	4,4-5,6	3,2	50	2/7/80 + 3/15/80	42	F con.	0026.215.50	01	
DP Scoring saw blade	215	4,4-5,2	3,2	50	2/7/80 + 3/15/80	42	F con.	7026.215.50	03	
HW Postforming	300	4,4-5,6	3,5	50	3/15/80	48	F con.	0026.300.50	01	
HW Scoring saw blade	200	4,4-5,6	3,4	20	2/11/66	36	F con.	0026.200.34	01	
DP Scoring saw blade	200	4,4-5,2	3,4	20	2/11/66	32	F con.	7026.200.20	03	

2.0024B Panel sizing circular saw blade 2.0

Standard version - large diameters

Application:	Sizing and finish cut with long service life
Material:	Plastic coated and film coated wood-based material, HPL
Machine:	Panel sizing units, horizontal with scoring aggregate
Design:	Noise reduced due to minimal gullets and new saw body design; ChipBelt®; reduced cutting pressure
Tooth:	Flat-triple-chip tooth, HW
Feed:	MEC

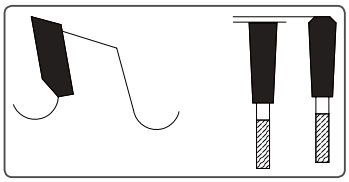

Further information:
ake.de/en/panel-sizing-saw-blades-2-0

D mm	B mm	b mm	d mm	NL mm	Machine	Z	Tooth-form	Order No.	Price [PG 01]
530	5,0	3,5	30		Schelling	60	FT	2.0024B.530.60.30	
570	4,8	3,5	60	2/14/100 + 2/11/115 + 2/19/120 + 2/14/125	Homag SAWTEQ B-500 (HPP 500)	60	FT	2.0024B.570.60.60	
580	5,5	4,0	40	2/13/114 + 2/13/122 + 2/13/140	Schelling AT & FT & AS & FS	60	FT	2.0024B.580.60.40	
600	5,8	4,0	60	2/14/100 + 2/11/115 + 2/19/120 + 2/14/125	Homag SAWTEQ B-600 (HPP 600)	60	FT	2.0024B.600.60.60	
600	5,8	4,0	80	2/14/100 + 2/11/115 + 2/19/120 + 2/14/125		60	FT	2.0024B.600.60.80	
600	5,8	4,0	60	2/14/100 + 2/11/115 + 2/19/120 + 2/14/125	Homag SAWTEQ B-600 (HPP 600)	72	FT	2.0024B.600.72.60	
670	5,8	4,2	60	2/19/120 + 2/11/148	Homag Type 66	48	FT	2.0024B.670.48.60	
680	6,2	4,2	40	2/13/114 + 2/13/122 + 2/13/140	Schelling AS & FS	60	FT	2.0024B.680.60.40	
680	6,2	4,2	80	4/19/120 + 2/9/130 + 4/11/130		60	FT	2.0024B.680.60.80	
700	7,0	5,0	80	2/17/110	Anthon LNC	60	FT	2.0024B.700.60.80	
720	6,4	4,4	40	2/13/114 + 2/13/122 + 2/13/140	Schelling AS & FS	60	FT	2.0024B.720.60.40	
730	6,2	4,2	60	2/19/120 + 2/11/148	Homag Type 66	60	FT	2.0024B.730.60.60	
730	7,0	5,0	80	2/17/110	Anthon LNC	60	FT	2.0024B.730.60.80	

0026 I 7026 I HW / DP Scoring saw blade
for standard version - large diameters

Application:	Scoring of laminated wood-based material, parallel feed; DP design for max. tool life and low costs per cut; HW design for low initial costs
Material:	Plastic laminated and film-coated wood-based material, HPL
Machine:	Panel sizing unit horizontal with scoring aggregate
Tooth:	Flat tooth conical (F con.), Alternate top bevel tooth (W), HW / DP
Feed:	MEC

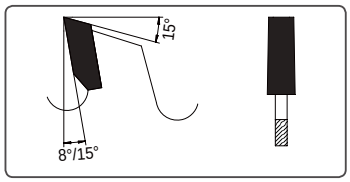

Fig.: Flat tooth conical (F con.)

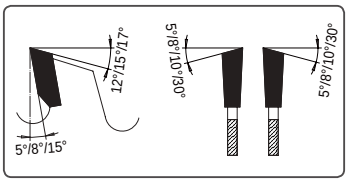

Fig.: Alternate top bevel tooth (W)

Type	D mm	B mm	b mm	d mm	NL mm	Z	Tooth	Order No.	PG	Price
HW Scoring saw blade	200	5,0-5,8	3,5	20	2/11/66	36	F con.	0026.200.20	01	
DP Scoring saw blade	200	5,0-5,8	3,5	20	2/11/66	32	F con.	7026.200.22	03	NEW
HW Scoring saw blade	200	4,8-5,8	3,5	45		36	F con.	0026.200.45	01	
DP Scoring saw blade	200	4,8-5,6	3,5	45		32	F con.	7026.200.46	03	
HW Postforming	340	5,0	3,5	45	3/14/65	108	W	0026.341.49	01	
HW Scoring saw blade	200	5,5-6,6	3,8	20	2/11/66	36	F con.	0026.200.23	01	
DP Scoring saw blade	200	5,5-6,4	4,0	20	2/11/66	32	F con.	7026.200.23	03	NEW
HW Scoring saw blade	200	5,9-6,9	3,5	45		36	F con.	0026.200.47	01	
DP Scoring saw blade	200	5,8-6,6	4,5	45		32	F con.	7026.200.47	03	
Depending machines										
HW Scoring saw blade	200	5,9-6,9	3,5	45		36	F con.	0026.200.47	01	
DP Scoring saw blade	200	5,8-6,6	4,5	45		32	F con.	7026.200.47	03	
HW Scoring saw blade	200	6,2-7,2	4,2	45		36	F con.	0026.200.46	01	
DP Scoring saw blade	200	6,2-7,0	4,2	45		32	F con.	7026.200.48	03	NEW
HW Scoring saw blade	200	6,2-7,2	4,2	20	2/11/66	36	F con.	0026.200.24	01	
DP Scoring saw blade	200	6,2-7,0	4,2	20	2/11/66	32	F con.	7026.200.25	03	NEW
Depending machines										
HW Scoring saw blade	200	7,0-8,0	5,0	20	2/9/60	36	F con.	0026.200.27	01	NEW
DP Scoring saw blade	200	7,0-7,8	5,0	20	2/9/60	32	F con.	7026.200.27	03	NEW
HW Scoring saw blade	220	6,4-7,4	4,4	20		36	F con.	0026.220.20	01	
DP Scoring saw blade	220	6,4-7,2	4,4	20		32	F con.	7026.220.20	03	NEW
HW Scoring saw blade	200	6,2-7,2	4,2	45		36	F con.	0026.200.46	01	
DP Scoring saw blade	200	6,2-7,0	4,2	45		32	F con.	7026.200.48	03	NEW
HW Scoring saw blade	200	7,0-8,0	5,0	20	2/9/60	36	F con.	0026.200.27	01	NEW
DP Scoring saw blade	200	7,0-7,8	5,0	20	2/9/60	32	F con.	7026.200.27	03	NEW

2.0024C Panel sizing circular saw blade 2.0

Thin-kerf version

Your benefits at a glance:

- 25% smaller kerf
- 25% reduced amount of chips
- 25% reduced power consumption
- 25% reduced material waste

Application:	Sizing and finish cut with long service life
Material:	Plastic coated and film coated wood-based material, HPL
Machine:	Panel sizing units, horizontal with scoring aggregate
Design:	Noise reduced due to minimal gullets and new saw body design; ChipBelt®; reduced cutting pressure
Tooth:	Flat-triple-chip tooth, HW
Feed:	MEC

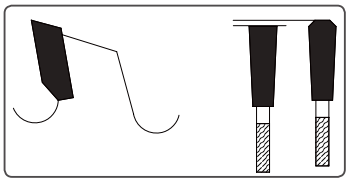

Further information:
ake.de/en/panel-sizing-saw-blades-2-0

	D mm	B mm	b mm	d mm	NL mm	Machine	Z	Tooth-form	Order No.	Price [PG 01]
	300	3,2	2,2	30	NLK	Panhans ECOPAN, Panhans EURO P8, Holz-Her DBS 6010	60	FT	2.0024C.300.60.30	
	300	3,2	2,2	60	2/14/100	Homag SAWTEQ B-130 (HPP 130)	60	FT	2.0024C.300.60.60	
NEW	320	3,6	2,8	65	2/9/110	Biesse Selco EB 75 & 80, Sektor 430 & 450	60	FT	2.0024C.320.60.65	
TOP	350	3,6	2,8	30	2/10/60	Holz-Her Tectra 6120 classic & Cut 70 & Cut 85 & Cut 6110 & Cut 6120 & Cut 6320, Schelling S45, Panhans Polypan 47 & EURO P10 & EURO 12 & EURO 30 & 693 & ECOSTAR II & S45 ALL IN ONE	72	FT	2.0024C.350.72.30	
TOP	350	3,6	2,8	30	2/10/60	Scheer PA 5500 & PA6000	72	FT	2.0024C.350.72.30	
TOP	350	3,6	2,8	30	2/10/60	Schelling fh 4 old & fk4 old & FM	72	FT	2.0024C.350.72.30	
TOP	350	3,6	2,8	60	2/14/100	Homag SAWTEQ B-300 (HPP 300) & HPP 350	72	FT	2.0024C.350.72.60	
TOP	350	3,6	2,8	60	2/14/100	Homag SAWTEQ B-200 (HPP 200)	72	FT	2.0024C.350.72.60	
NEW	355	3,6	2,8	65	2/9/110	Biesse Selco EB 95 & Sektor 470	72	FT	2.0024C.355.72.65	
TOP	380	3,6	2,8	60	2/14/100 2/14/125	Homag SAWTEQ B-300 (HPP 300)	72	FT	2.0024C.380.72.60	
TOP	380	3,6	2,8	60	2/14/100 2/14/125	Homag HPP 180	72	FT	2.0024C.380.72.60	

0026 | 7026 | HW / DP Scoring saw blade
for thin-kerf version

Application:	Scoring of laminated wood-based material, parallel feed; DP design for max. tool life and low costs per cut; HW design for low initial costs
Material:	Plastic laminated and film-coated wood-based material, HPL
Machine:	Panel sizing unit horizontal with scoring aggregate
Tooth:	Flat tooth conical (F con.), Alternate top bevel tooth (W), HW / DP
Feed:	MEC

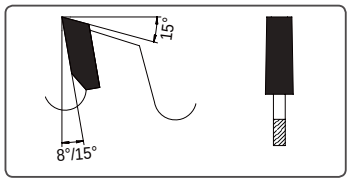

Fig.: Flat tooth conical (F con.)

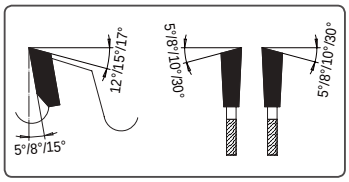

Fig.: Alternate top bevel tooth (W)

Type	D mm	B mm	b mm	d mm	NL mm	Z	Tooth	Order No.	PG	Price
HW Scoring saw blade	180	3,3-4,1	2,2	30	NLK	28	F con.	0026.180.32	01	
DP Scoring saw blade	180	3,3-4,1	2,2	30	NLK	28	F con.	7026.180.30	03	
HW Scoring saw blade	150	3,3-4,1	2,2	45		28	F con.	0026.150.46	01	
DP Scoring saw blade	150	3,3-4,1	2,2	45		28	F con.	7026.150.45	03	
HW Scoring saw blade	200	3,7-4,5	2,8	65	2/9/100 + 2/9/110	32	F con.	0026.201.65	01	
DP Scoring saw blade	200	3,7-4,5	2,8	65	2/9/100 + 2/9/110	32	F con.	7026.201.65	03	
HW Postforming	300	3,7-4,5	2,8	65	2/9/100 + 2/9/110	48	W con.	0026.300.70	01	NEW
HW Postforming	300	3,8	2,8	65	2/9/100 + 2/9/110	72	W	0026.300.72	01	NEW
HW Scoring saw blade	180	3,7-4,5	2,8	30	NLK	28	F con.	0026.180.36	01	NEW
DP Scoring saw blade	180	3,7-4,5	2,8	30	NLK	28	F con.	7026.180.36	03	NEW
HW Scoring saw blade	200	3,7-4,5	2,8	30	2/8,5/60	36	F con.	0026.201.30	01	NEW
DP Scoring saw blade	200	3,7-4,5	2,8	30	2/8,5/60	36	F con.	7026.201.30	03	NEW
HW Scoring saw blade (till 2015)	300	3,7-4,5	2,8	30	2/11/73 + 2/13/94	36	F con.	0026.300.33	01	NEW
DP Scoring saw blade (till 2015)	300	3,7-4,5	3,2	30	2/11/73 + 2/13/94	32	F con.	7026.300.33	03	NEW
HW Scoring saw blade	180	3,7-4,5	2,8	45		36	F con.	0026.180.47	01	
DP Scoring saw blade	180	3,7-4,5	2,8	45		36	F con.	7026.181.45	03	
HW Scoring saw blade	200	3,7-4,5	2,8	45		36	F con.	0026.201.46	01	NEW
DP Scoring saw blade	200	3,7-4,5	2,8	45		36	F con.	7026.201.46	03	NEW
HW Scoring saw blade	200	3,7-4,5	2,8	65	2/9/100 + 2/9/110	32	F con.	0026.201.65	01	
DP Scoring saw blade	200	3,7-4,5	2,8	65	2/9/100 + 2/9/110	32	F con.	7026.201.65	03	
HW Postforming	300	3,7-4,5	2,8	65	2/9/100 + 2/9/110	48	W con.	0026.300.70	01	NEW
HW Postforming	300	3,8	2,8	65	2/9/100 + 2/9/110	72	W, Fa.	0026.300.72	01	NEW
HW Scoring saw blade	180	3,7-4,5	2,8	45		36	F con.	0026.180.47	01	
DP Scoring saw blade	180	3,7-4,5	2,8	45		36	F con.	7026.181.45	03	
HW Scoring saw blade	200	3,7-4,5	2,8	45		36	F con.	0026.201.46	01	NEW
DP Scoring saw blade	200	3,7-4,5	2,8	45		36	F con.	7026.201.46	03	NEW

2.0024C Panel sizing circular saw blade 2.0

Thin-kerf version

	D mm	B mm	b mm	d mm	NL mm	Machine	Z	Tooth-form	Order No.	Price [PG 01]
NEW TOP	380	3,6	2,8	65	2/9/110	Biesse Selco WN 610	72	FT	2.0024C.380.72.65	
TOP	380	3,6	2,8	75	2/7/110	Giben	72	FT	2.0024C.380.72.75	
NEW	400	4,0	3,0	65	2/9/110	Biesse Selco WN 630	72	FT	2.0024C.400.72.65	
NEW	430	4,0	3,0	65	2/9/110	Biesse Selco WN 650	72	FT	2.0024C.430.72.65	

0026 / 7026 HW / DP Scoring saw blade
for thin-kerf version

Type	D mm	B mm	b mm	d mm	NL mm	Z	Tooth	Order No.	PG	Price
HW Scoring saw blade	200	3,7-4,5	2,8	65	2/9/100 + 2/9/110	32	F con.	0026.201.65	01	
DP Scoring saw blade	200	3,7-4,5	2,8	65	2/9/100 + 2/9/110	32	F con.	7026.201.65	03	
HW Postforming	300	3,7-4,5	2,8	65	2/9/100 + 2/9/110	48	W con.	0026.300.70	01	NEW
HW Postforming	300	3,8	2,8	65	2/9/100 + 2/9/110	72	W	0026.300.72	01	NEW
HW Postforming	350	3,8	2,8	65	2/9/100 + 2/9/110	72	W	0026.350.67	01	NEW
HW Scoring saw blade	190	3,7-4,5	2,8	50	2/7/80	32	F con.	0026.190.51	01	
HW Scoring saw blade	215	3,7-4,5	2,8	50	2/7/80	32	F con.	0026.215.53	01	NEW
DP Scoring saw blade	190	3,7-4,5	2,8	50	2/7/80	32	F con.	7026.190.50	03	
DP Scoring saw blade	215	3,7-4,5	2,8	50	2/7/80	32	F con.	7026.215.53	03	NEW
HW Scoring saw blade	200	4,1-5,3	3,0	65	2/9/100 + 2/9/110	36	F con.	0026.201.66	01	NEW
DP Scoring saw blade	200	4,1-4,9	3,0	65	2/9/100 + 2/9/110	32	F con.	7026.201.66	03	NEW
HW Postforming	300	4,1-4,9	3,0	65	2/9/100 + 2/9/110	48	W con.	0026.300.71	01	NEW
HW Postforming	350	4,2	3,0	65	2/9/100 + 2/9/110	72	W	0026.350.68	01	NEW
HW Scoring saw blade	200	4,1-5,3	3,0	65	2/9/100 + 2/9/110	36	F con.	0026.201.66	01	NEW
DP Scoring saw blade	200	4,1-4,9	3,0	65	2/9/100 + 2/9/110	32	F con.	7026.201.66	03	NEW
HW Postforming	300	4,1-4,9	3,0	65	2/9/100 + 2/9/110	48	W con.	0026.300.71	01	NEW
HW Postforming	350	4,2	3,0	65	2/9/100 + 2/9/110	72	W	0026.350.68	01	NEW

0224 Super Plus. Tool service life + cutting quality
Panel sizing

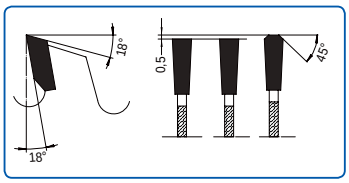

Your benefits at a glance:

Black Belt® Technology

- High productivity
- Short set-up time
- Reduction of costs
- High quality
- Noise reduction

Application:	Sizing cuts with high feed rate and long tool service life, single and in packs
Material:	Plastic laminated and film-coated wood-based material, duroplastic materials
Machine:	Panel sizing machine horizontal with scoring aggregate
Design:	Noise reduced due to N-slots in the saw body, division of cut (clustered teeth) for longer tool service life and improved cutting quality
Tooth:	Flat-flat-triple-chip tooth (FFT), HW
Feed:	MEC

D mm	B mm	b mm	d mm	NL mm	Machine	Z	Tooth	Order No.	Price [PG 01]
300	4,40	3,00	30	2/10/60	Panhans, Scheer	60	FFT	0224.300.30	
300	4,40	3,00	75		Homag	72	FFT	0224.300.75	
350	4,40	3,00	30	2/10/60	Panhans, Schelling, Holz-Her	72	FFT	0224.350.31	
355	4,40	3,00	30	2/10/60	Mayer, Panhans	72	FFT	0224.355.29	
355	4,40	3,00	75		Giben	72	FFT	0224.355.77	
380	4,80	3,50	60	2/14/100 2/14/125	Homag	72	FFT	0224.381.60	
400	4,40	3,00	30		Mayer, Panhans, Scheer	72	FFT	0224.400.30	
400	4,40	3,00	75	4/15/105	Giben	72	FFT	0224.400.75	
400	4,40	3,20	80	4/19/120 2/9/130	Biesse Selco	72	FFT	0224.400.80	
420	4,80	3,50	60	2/19/120 2/14/125	Homag	72	FFT	0224.421.60	
450	4,40	3,20	30	2/10/60	Mayer, Panhans, Schelling, Holz-Her	72	FFT	0224.450.30	
450	4,80	3,50	60	2/19/120 2/14/125	Homag	72	FFT	0224.450.62	
450	4,80	3,50	80	4/19/120 2/9/130	Biesse Selco	72	FFT	0224.450.83	
460	4,40	3,20	30	2/13/94	Schelling	72	FFT	0224.460.30	
480	4,40	3,20	30	2/13/94	Schelling	72	FFT	0224.480.30	
480	4,80	3,50	80	4/19/120 2/9/130	Biesse Selco	72	FFT	0224.480.80	
500	4,80	3,50	60	2/11/115	Homag	72	FFT	0224.500.61	
570	4,80	3,50	60	2/19/120	Homag	60	FFT	0224.570.60	
600	5,80	4,00	60	2/11/115 2/19/120	Homag	60	FFT	0224.600.60	

You will also find the right Super Plus scoring saw blade in the programme on Page 66

0428 Solution. Best cutting quality

Panel sizing, single or in packs

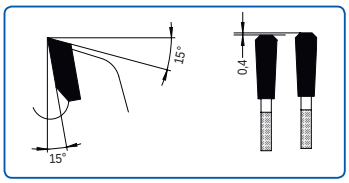

Your benefits at a glance:

Vario S

- Long tool service life
- Finish cut quality
- Economic efficiency
- Noise reduction

Application:	Finish cut with long tool service life, preferably applied for single panels and panels in packs
Material:	Plastic laminated and film-coated wood-based material, duroplastic materials
Machine:	Panel sizing machine horizontal with scoring aggregate
Design:	Noise reduced due to N-shaped slots in the saw body, variable tooth pitch and different gullet depths
Tooth:	Triple-chip-triple-chip tooth (TT); HW
Feed:	MEC

D mm	B mm	b mm	d mm	NL mm	KS	Machine	Z	Tooth	Order No.	Price [PG 01]
320	4,40	3,20	50	3/13/80 3/13/95		Giben	60	TT	0428.320.50	
350	4,40	3,20	30	2/10/60		Panhans, Schelling, Holz-Her	72	TT	0428.350.30	
350	4,40	3,20	60	2/14/100		Homag	72	TT	0428.350.60	
355	4,40	3,20	30	2/10/60		Mayer	72	TT	0428.355.30	
360	4,40	3,20	65	2/9/110		Biesse Selco	72	TT	0428.360.65	
380	4,40	3,20	50	4/13/80		Giben	72	TT	0428.380.50	
380	4,40	3,20	60	2/14/100 2/14/125		Homag	72	TT	0428.380.62	
380	4,80	3,50	60	2/14/100 2/14/125		Homag	72	TT	0428.380.60	
400	4,40	3,20	30			Mayer, Panhans, Scheer	72	TT	0428.400.30	
450	4,80	3,50	60	2/19/120 2/14/125		Homag	72	TT	0428.450.60	
480	4,80	3,50	60	2/11/115 2/19/120	KS	Homag	72	TT	0428.480.60	
520	4,80	3,50	60	2/11/115 2/19/120	KS	Homag	72	TT	0428.520.60	

0023 Wood-based material circular saw blade
Panel sizing

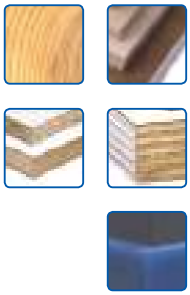

Application:	Panel sizing; single cut or in packs
Material:	Solid wood, panel material raw and veneered, plywood, thermoplastic material
Machine:	Panel sizing machine horizontal with scoring aggregate, double-end tenoner
Design:	Rigid saw body with large tooth overhang • = with copper plugs
Tooth:	Alternate top bevel tooth (W), HW
Feed:	MAN / MEC

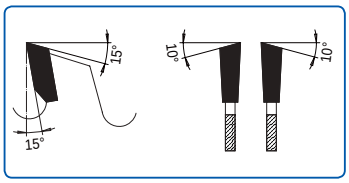

	D mm	B mm	b mm	d mm	NL mm	Machine	Z	Tooth	Order No.	Price [PG 01]
•	305	4,40	3,00	30		Mayer	54	W	0023.305.30	
•	305	4,40	3,00	80		SCM	54	W	0023.305.80	
•	350	4,40	3,20	30		Schelling	54	W	0023.350.30	
•	350	4,40	3,20	30		Schelling	72	W	0023.350.31	
•	355	4,40	3,20	30		Mayer	54	W	0023.355.30	
•	355	4,40	3,20	30		Mayer	72	W	0023.355.31	
•	355	4,40	3,20	80		Gabbiani	72	W	0023.355.81	
•	380	4,40	3,20	30			48	W	0023.380.30	
•	400	4,40	3,20	30		Mayer	60	W	0023.400.30	
•	400	4,40	3,20	30		Mayer	72	W	0023.400.31	
•	400	4,40	3,20	80		Gabbiani	72	W	0023.400.81	
	430	4,40	3,20	30		Schelling	72	W	0023.430.31	
	450	4,40	3,20	30		Schelling	54	W	0023.450.30	
	450	4,40	3,20	30		Schelling	72	W	0023.450.31	
	450	4,60	3,20	30	2/10/60	Schelling	72	W	0023.450.32	
	460	4,40	3,20	30	2/13/94	Schelling	54	W	0023.460.30	
	500	4,40	3,20	80			60	W	0023.500.80	
	500	4,40	3,20	30			72	W	0023.500.31	
	520	4,40	3,20	30	2/13/94	Schelling	44	W	0023.520.30	
	550	5,20	3,60	30			60	W	0023.550.30	
	550	5,20	3,60	80			60	W	0023.550.80	

0024 Wood-based material circular saw blade
Panel sizing

DP-Design
see DP-chapter on page 152

Application:	Panel sizing Single cut or in packs
Material:	Plastic laminated and film-coated wood-based material, duroplastic materials
Machine:	Panel sizing machine horizontal with scoring aggregate
Design:	Rigid saw body, ♪ = Soundstar design: noise reduced • = with copper plugs
Tooth:	Flat-triple-chip tooth (FT), HW
Feed:	MEC

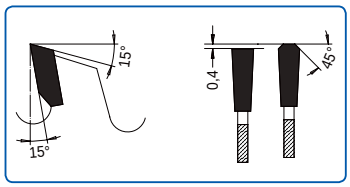

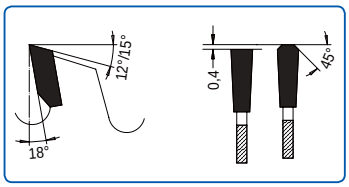

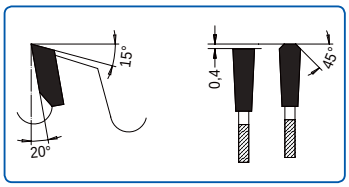

	D mm	B mm	b mm	d mm	NL mm	Machine	Z	Tooth	Order No.	Price [PG 01]
☐ •	300	4,40	3,00	30	2/10/60	Panhans	60	FT	0024.300.30	
☐	300	4,40	3,20	60	2/14/100	Homag 130	72	FT	0024.300.60	
☐	300	4,40	3,20	65	2/9/110	Biesse Selco	60	FT	0024.300.65	
☐	300	4,40	3,20	75		Homag	72	FT	0024.300.75	
☐	300	4,40	3,20	80	4/8,5/100 2/7/110 2/14/110	SCM	60	FT	0024.300.80	
☐ •	305	4,00	2,80	30	2/10/60	Mayer	54	FT	0024.305.30	
☐ •	305	4,40	3,00	30	2/10/60	Mayer	54	FT	0024.305.31	
☐ •	305	4,40	3,00	30	2/10/60	Mayer	60	FT	0024.305.32	
☐ ♪	305	4,40	3,00	30	2/10/60	Mayer	60	FT	0124.305.32	
☐	310	4,40	3,20	60	2/14/100	Homag	72	FT	0024.310.60	
☐	320	4,40	3,00	30	2/10/60	Mayer, Felder	60	FT	0024.320.30	
☐	320	4,40	3,20	65	2/9/110	Biesse Selco	60	FT	0024.320.65	
☐ •	320	4,40	3,20	75	3/13/95	Giben	72	FT	0024.320.75	
☐	320	4,40	3,20	80	4/8,5/100 2/7/110 2/14/110	SCM	60	FT	0024.320.80	
☐ •	330	4,40	3,20	50	4/13/80	Giben	60	FT	0024.330.50	
☐ •	350	4,40	3,20	30	2/10/60	Panhans, Holz-Her, Schelling, Mayer	54	FT	0024.350.30	
☐ •	350	4,25	3,20	30	2/8,5/60	Scheer	72	FT	0024.350.33	
☐ ♪	350	4,40	3,00	30	2/10/60	Panhans, Holz-Her, Schelling, Mayer	72	FT	0124.350.31	
☐ •	350	4,40	3,20	30	2/10/60	Panhans, Holz-Her, Schelling, Mayer	72	FT	0024.350.31	
☐ •	350	4,40	3,20	30	2/8,5/60	Scheer	72	FT	0024.350.32	
☐	350	4,40	3,20	50	4/13/80	Giben	72	FT	0024.350.50	
☐ •	350	4,40	3,20	60	2/14/100	Homag	72	FT	0024.350.60	
☐ •	350	4,40	3,20	80	2/14/110	Gabbiani, SCM	60	FT	0024.350.81	
☐ •	350	4,40	3,20	80	2/14/110	Gabbiani, SCM	72	FT	0024.350.80	
☐ •	355	4,40	3,20	65	2/9/110	Biesse Selco	72	FT	0024.355.65	

0024 Wood-based material circular saw blade
Panel sizing

DP-Design
see DP-chapter on page 152

	D mm	B mm	b mm	d mm	NL mm	Machine	Z	Tooth	Order No.	Price [PG 01]
☐ •	355	4,40	3,20	75		Giben	54	FT	0024.355.76	
☐ •	355	4,00	2,80	30	2/10/60	Mayer	72	FT	0024.355.28	
☐ •	355	4,40	3,20	30	2/10/60	Panhans, Schelling, Mayer	72	FT	0024.355.29	
☐ •	355	4,40	3,20	75		Giben	72	FT	0024.355.77	
☐ •	355	4,40	3,20	80	2/9/130 4/19/120	Biesse Selco	72	FT	0024.355.82	
☐ •	355	4,40	3,20	80	4/8,50/100 2/7/110 2/14/110	Gabbiani	72	FT	0024.355.81	
☐ •	360	4,40	3,20	65	2/9/110	Biesse Selco	72	FT	0024.360.65	
☐ •	370	4,40	3,20	30		Schelling FM-H	72	FT	0024.370.30	
☐ •	380	4,40	3,20	30	2/10/60	Holz-Her	72	FT	0024.380.30	
☐ •	380	4,40	3,20	60	2/14/100 + 2/14/125	Homag	72	FT	0024.380.60	
☐ •	380	4,40	3,20	65	2/9/110	Biesse Selco	72	FT	0024.380.65	
☐ •	380	4,40	3,20	80	2/14/110	Gabbiani, SCM	72	FT	0024.380.80	
☐ •	380	4,80	3,50	60	2/14/100 + 2/14/125	Homag	72	FT	0024.381.60	
☐ •	380	4,80	3,50	60	2/14/100 + 2/14/125	Homag	84	FT	0024.381.61	
☐ •	380	4,80	3,50	60	2/14/100 + 2/14/125	Homag	96	FT	0024.381.63	
☐ •	400	4,40	3,20	30		Panhans, Scheer	60	FT	0024.400.31	
☐ •	400	4,25	3,20	30	2/10/60	Scheer, Postforming	72	FT	0024.400.03	
☐ •	400	4,40	3,20	30	2/10/60	Panhans, Mayer, Scheer	72	FT	0024.400.30	
☐ ♪	400	4,40	3,20	30	2/10/60	Panhans, Mayer, Scheer	72	FT	0124.400.30	
☐	400	4,40	3,20	30	KS	Panhans, Mayer, Scheer	72	FT	0024.402.30	
☐ •	400	4,40	3,20	60	2/11/85	Anthon	72	FT	0024.400.60	
☐ •	400	4,40	3,20	65	2/9/110	Biesse, Selco	72	FT	0024.400.65	
☐ •	400	4,40	3,20	75	4/15/105	Giben	72	FT	0024.400.75	
☐ •	400	4,40	3,20	80	4/8,5/100 + 2/7/110 + 2/14/110	Gabbiani	60	FT	0024.400.83	
☐ •	400	4,40	3,20	80	4/19/120 + 2/9/130	Biesse Selco	72	FT	0024.400.80	
☐ •	420	4,40	3,20	80	2/14/110	Gabbiani, SCM	72	FT	0024.420.80	
☐ •	420	4,60	3,20	60	2/19/120 + 2/14/125	Homag	72	FT	0024.420.60	
☐ •	420	4,80	3,50	60	2/14/125 + 2/19/120	Homag	72	FT	0024.421.60	
☐ •	420	4,80	3,50	60	2/14/125 + 2/19/120	Homag	84	FT	0024.421.61	
☐	430	4,40	3,20	30			72	FT	0024.430.30	
☐	430	4,40	3,20	65	2/9/110	Biesse Selco	72	FT	0024.430.65	
☐	430	4,40	3,20	75	4/15/105	Giben	72	FT	0024.430.77	
☐	430	4,40	3,20	75	4/15/105	Giben Prismatic	96	FT	0024.430.75	
☐	430	4,80	3,50	70	4/11/130	Biesse Selco	72	FT	0024.430.70	
☐	430	4,40	3,20	80	2/9/130 + 4/19/120	Biesse Selco	72	FT	0024.430.80	

0024 Wood-based material circular saw blade
Panel sizing

DP-Design
see DP-chapter on page 152

	D mm	B mm	b mm	d mm	NL mm	Machine	Z	Tooth	Order No.	Price [PG 01]
☐	450	4,40	3,20	30			54	FT	0024.450.31	
☐	450	4,40	3,20	30	2/10/60	Mayer, Panhans, Scheer, Schelling	72	FT	0024.450.30	
☐	450	4,40	3,20	80	KS		72	FT	0024.450.80	
☐	450	4,40	3,20	80	4/8,5/100 + 2/7/110 + 2/14/110	Gabbiani	72	FT	0024.450.81	
☐	450	4,40	3,20	80	2/9/130 + 4/19/120	Biesse Selco	72	FT	0024.450.82	
☐ •	450	4,80	3,50	30	2/8,5/60	Scheer	72	FT	0024.450.32	
☐	450	4,80	3,50	60	2/14/125 + 2/19/120	Homag	72	FT	0024.450.62	
☐	450	4,80	3,50	80	4/19/120 + 2/9/130	Biesse Selco	72	FT	0024.450.83	
☐	450	4,80	3,50	60	2/14/125 + 2/19/120	Homag	84	FT	0024.450.64	
☐	460	4,40	3,20	30	2/13/94	Schelling	54	FT	0024.460.31	
☐	460	4,40	3,20	30	2/13/94	Schelling	72	FT	0024.460.30	
☐	470	4,80	3,50	70	4/11/130	Biesse Selco	72	FT	0024.470.70	
☐	470	4,40	3,20	75	4/15/105	Giben	96	FT	0024.470.75	
☐	480	4,80	3,50	80	4/19/120 + 2/9/130	Biesse Selco	72	FT	0024.480.80	
☐	480	4,80	3,50	60	2/19/120	Homag	72	FT	0024.480.60	
☐	480	4,40	3,20	30		Schelling	80	FT	0024.480.30	
☐	500	4,40	3,20	30		Schelling	60	FT	0024.500.29	
☐	500	4,80	3,50	60	2/11/115	Homag	60	FT	0024.500.60	
☐	500	4,80	3,50	60	2/11/115	Homag	72	FT	0024.500.61	
☐	510	4,80	3,50	80	2/9/130 + 4/19/120	Biesse Selco	72	FT	0024.510.80	
☐	520	4,40	3,20	30	2/13/94	Schelling	72	FT	0024.520.30	
☐	520	4,80	3,50	60	2/11/115 + 2/19/120	Homag	60	FT	0024.520.60	
☐	520	4,80	3,50	70	4/11/130	Biesse Selco	72	FT	0024.520.70	
☐	520	4,80	3,50	60	2/11/115 + 2/19/120	Homag	84	FT	0024.520.61	
☐	530	5,00	3,50	30		Schelling	60	FT	0024.530.30	
☐	530	5,80	4,00	60	2/11/85	Anthon	60	FT	0024.530.60	
☐	570	4,80	3,50	60	2/19/120	Homag	60	FT	0024.570.60	
☐	580	5,50	4,00	40	2/13/122	Schelling AT/FT	60	FT	0024.580.40	
☐	600	5,80	4,00	60	2/11/115 + 2/19/120	Homag	60	FT	0024.600.60	
☐	600	5,80	4,00	60	2/11/115 + 2/19/120	Homag	72	FT	0024.600.61	
☐	620	6,20	4,20	40	2/13/114 + 2/13/140	Schelling	60	FT	0024.620.40	
☐	670	6,20	4,20	40	2/13/114 + 2/13/140	Schelling	60	FT	0024.670.40	
☐	700	7,00	5,00	80	2/17/110 + KS	Anthon	60	FT	0024.700.80	
☐	720	6,40	4,40	40	2/14/114 + 2/14/140	Schelling	60	FT	0024.720.40	
☐	730	6,20	4,20	60	2/11/148 + 2/19/120	Homag	60	FT	0024.730.60	

0026 Super Plus - Circular scoring saw blade

Scoring of wood-based material

Your benefits at a glance:

Vario S Black Belt® Technology

- High productivity
- Short set-up time
- Reduction of costs
- High quality
- Noise reduction

Application:	Scoring of laminated wood-based material, parallel feed with long service life
Material:	Plastic laminated and film-coated wood-based material, veneered wood-based material
Machine:	Panel sizing machines horizontal with scoring aggregate
Design:	Noise-reduced due to variable tooth pitch and different gullet depths, conical alternate top bevel tooth (W) tips for aggregates with low motor power
Tooth:	Alternate top bevel tooth conical (W con.), HW
Feed:	MEC

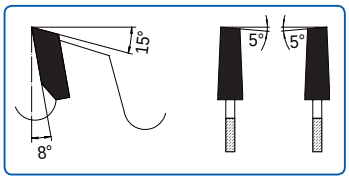

D mm	B mm	b mm	d mm	NL mm	Machine	Z	Tooth shape	Order No.	Price [PG 01]
150	4,4-5,6	3,40	30		Mayer	28	W con.	0026.150.31	
180	4,8-5,8	3,50	45		Homag	36	W con.	0026.180.46	
200	4,4-5,6	3,20	65	2/9/100 2/9/110	Biesse	36	W con.	0026.200.67	
200	4,4-5,6	3,40	20	2/11/66	Panhans, Schelling	36	W con.	0026.200.26	
200	4,8-5,8	3,50	45		Homag	36	W con.	0026.200.49	

0026 Scoring system for vertical panel sizing saws
with scoring aggregate

Your benefits at a glance:

- Tools are changeable
- No wrong assembling possible, because of symmetrical tool design
- Flange with spring ring is reusable
- Was developed especially for machines of well-known manufacturers

Application:	Scoring of laminated wood-based material, parallel feed
Material:	Plastic laminated and film-coated wood-based material
Machine:	Panel sizing machines horizontal with scoring aggregate
Design:	3-piece design with flange and spring washer, cutting width easily adjustable
Tooth:	Alternate top bevel tooth (W), HW
Feed:	MAN / MEC

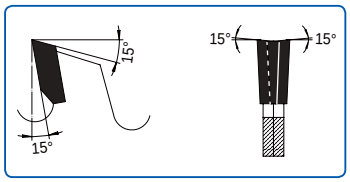

Complete set:

D mm	B mm	b mm	d mm	Machine	Z	Tooth shape	Order No.	PG	Price
80	2,8-3,6	4,0	20	Striebig, Putsch Meniconi	8 + 8	W	0026.080.27	01	

Spare parts:

Denomination	Technical specifications	Order No.	PG	Price
Spare saws, 2-piece	HW 80,00x2,80-3,60/4,00x20,00 Z8W+8W	0026.080.23	01	
Flange	57x9x20	0026.057.20	02	
Spring washer	51,8x41x0,5 corrugated	0026.051.41	02	

0026 Circular scoring saw blade
Scoring of wood-based material

DP-Design
see DP-chapter on page 152

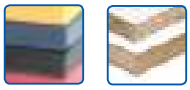

Application:	Scoring of laminated wood-based material, parallel feed; scoring of post forming components
Material:	Plastic laminated and film-coated wood-based material
Machine:	Panel sizing unit horizontal with scoring aggregate, trimming saw with scoring aggregate
Design:	Conical flat tooth for long tool service life and high feed rate, Conical alternate top bevel tooth for aggregates with low, machine power; alternate top bevel tooth for post forming cuts, alternate top bevel tooth with axial angle for post forming cuts
Tooth:	Flat tooth conical (F con.), Alternate top bevel tooth (W), Alternate top bevel tooth, two-piece design (W), Alternate top bevel tooth conical (W con.), Alternate top bevel tooth with axial angle (W AW), HW
Feed:	MAN / MEC

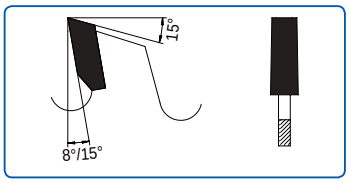

Fig.: Flat tooth conical (F con.)

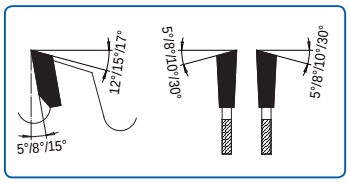

Fig.: Alternate top bevel tooth (W)

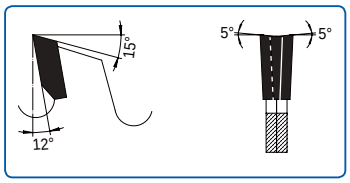

Fig.: Alternate top bevel tooth, two-piece design (W)

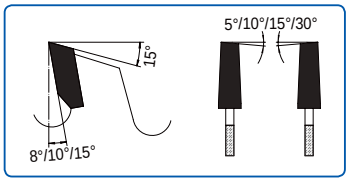

Fig.: Alternate top bevel tooth conical (W con.)

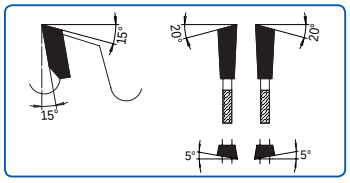

Fig.: Alternate top bevel tooth with axial angle (W AW)

Design: Alternate top bevel tooth, two-piece design

	D mm	B mm	b mm	d mm	NL mm	Machine	Z	Tooth	Order No.	Price [PG 01]
	80	2,8-3,6	4,00	20		Felder, Striebig	10 + 10	W	0026.080.20	
	100	2,8-3,6	4,00	20		Martin, Panhans, Schelling	12 + 12	W	0026.100.20	
	100	2,8-3,6	4,00	22		Altendorf, Striebig, Panhans	12 + 12	W	0026.100.01	
	110	2,8-3,6	4,00	20		GMC	12 + 12	W	0026.110.20	
TOP	120	2,8-3,6	4,00	20		Holzher, SCM	12 + 12	W	0026.120.03	
TOP	120	2,8-3,8	4,00	22		Altendorf	12 + 12	W	0026.120.02	
NEW	120	2,8-3,8	4,00	22	4/5,2/39 m. A. 4/5,2/55 m. A. 2/3,8/42 o. A.	Martin T73/T74	12 + 12	W	0026.120.22	
	120	2,8-3,8	4,40	22	2/4,5/42 2/4,8/39 m. A.	Martin T72A	12 + 12	W	0026.120.06	
TOP	120	2,8-3,8	4,40	50	4/6/62 m. A.	Altendorf Rapido [1)]	12 + 12	W	0026.120.04	
	120	2,8-3,8	6,00	50	4/4,5/60 4/8/60	Altendorf, Griggio, SCM *	12 + 12	W	0026.120.50	
	125	2,8-3,6	4,00	20		Paoloni	12 + 12	W	0026.125.20	
	125	2,8-3,6	4,00	22			12 + 12	W	0026.125.22	

* For AKE scoring system with notch adjustment
1) = Scoring saw blade for Altendorf Rapido Plus on request

0026 Circular scoring saw blade
Scoring of wood-based material

DP-Design
see DP-chapter on page 152

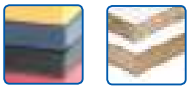

Design: Alternate top bevel tooth, two-piece design

D mm	B mm	b mm	d mm	NL mm	Machine	Z	Tooth	Order No.	Price [PG 01]
125	2,8-3,8	6,00	50	4/4,5/60 4/8/60	Panhans *	12 + 12	W	0026.125.50	
☐ 125	4,0-5,0	6,00	50	4/4,5/60 4/8/60	Paoloni, Panhans, Kölle *	12 + 12	W	0026.125.51	
140	2,8-3,8	4,00	36	3/9/55 3/4,2/55 2/6,2/51	Martin T75 PreX	12 + 12	W	0026.140.36	
180	2,8-3,8	4,40	50	4/6/62 m. A.	Altendorf Rapido	18 + 18	W	0026.180.51	
180	4,4-5,6	3,20	45		Homag	20 + 20	W	0026.180.13	

* For AKE scoring system with notch adjustment

Design: Flat tooth conical, one-piece

D mm	B mm	b mm	d mm	NL mm	Machine	Z	Tooth	Order No.	Price [PG 01]
100	3,0-4,0	2,60	20		Schelling	20	F con.	0026.100.21	
120	3,1-4,3	2,80	20			24	F con.	0026.120.20	
125	3,1-4,3	2,80	20		Panhans	24	F con.	0026.125.03	
125	3,1-4,3	2,80	22		Martin	24	F con.	0026.125.01	
125	4,4-5,6	3,40	20		Gabbiani, Panhans	24	F con.	0026.125.02	
125	4,4-5,6	3,40	45		Giben	24	F con.	0026.125.45	
127	3,8-5,0	2,80	45		Giben	24	F con.	0026.127.03	
127	4,0-5,2	3,40	45		Giben, Mayer	24	F con.	0026.127.04	
127	4,4-5,6	3,40	45		Giben, Mayer	24	F con.	0026.127.02	
150	3,0-4,0	2,60	30			28	F con.	0026.150.30	
NEW 150	3,3-4,1	2,20	30		Mayer	28	F con.	0026.150.32	
150	3,3-4,1	2,20	45		Homag HPP 130	28	F con.	0026.150.46	
TOP 150	3,7-4,5	2,80	30		Mayer PS 80	28	F con.	0026.151.30	
150	4,4-5,6	3,40	30		Mayer	28	F con.	0026.150.06	
150	4,4-5,6	3,40	45		Homag	28	F con.	0026.150.45	
160	3,1-4,0	2,60	20		Langzauner	32	F con.	0026.160.21	
160	4,4-5,6	3,20	30			28	F con.	0026.160.33	
160	4,4-5,6	3,20	45	3/11/70	Giben	28	F con.	0026.160.45	
160	4,4-5,6	3,40	55	3/7/66	Gabbiani, SCM	36	F con.	0026.160.55	
☐ 175	4,6-5,8	3,50	45		Homag	28	F con.	0026.175.45	
180	3,2-4,3	2,80	16	2/6/33	Scheer	42	F con.	0026.180.16	
180	3,3-4,1	2,20	30	NLK	Panhans Eco	28	F con.	0026.180.32	
NEW 180	3,7-4,5	2,80	30	NLK	Schelling, Panhans, Holz-Her	28	F con.	0026.180.36	
TOP 180	3,7-4,5	2,80	45		Homag	36	F con.	0026.180.47	
180	4,4-5,6	3,40	20	2/9/60	Anthon, Schelling	28	F con.	0026.180.20	
TOP 180	4,4-5,6	3,40	30	NLK	Panhans, Holzher, Schelling S45	28	F con.	0026.180.30	
TOP 180	4,4-5,6	3,20	45		Homag	36	F con.	0026.180.45	
180	4,4-5,6	3,40	50	3/13/80	Giben	42	F con.	0026.180.50	

0026 Circular scoring saw blade
Scoring of wood-based material

DP-Design
see DP-chapter on page 152

Design: Flat tooth conical, one-piece

	D mm	B mm	b mm	d mm	NL mm	Machine	Z	Tooth	Order No.	Price [PG 01]
TOP	180	4,8-5,8	3,50	45		Homag	36	F con.	0026.181.45	
	180	5,8-6,8	4,00	20		Anthon	36	F con.	0026.182.20	
	180	6,8-7,8	5,00	20		Anthon, Schelling	36	F con.	0026.180.34	
TOP	190	3,7-4,5	2,80	50	2/7/80	Giben	32	F con.	0026.190.51	
NEW	190	4,4-5,6	3,20	50	2/7/80	Giben	36	F con.	0026.190.52	
	200	3,2-4,3	2,80	30		Scheer	60	F con.	0026.200.31	
	200	3,3-4,1	2,20	45		Homag HPP 230	36	F con.	0026.201.45	
TOP	200	3,7-4,5	2,80	20	2/11/66	Schelling FH4, Panhans	36	F con.	0026.200.25	
NEW	200	3,7-4,5	2,80	30	2/8,5/60	Scheer	36	F con.	0026.201.30	
NEW	200	3,7-4,5	2,80	45		Homag	36	F con.	0026.201.46	
TOP	200	3,7-4,5	2,80	65	2/9/100 2/9/110	Biesse	32	F con.	0026.201.65	
NEW	200	4,1-5,3	3,00	65	2/9/100 2/9/110	Biesse	36	F con.	0026.201.66	
TOP	200	4,4-5,2	3,20	45		Homag	36	F con.	0026.200.51	
	200	4,4-5,6	3,40	20	2/11/66	Schelling	24	F con.	0026.200.22	
TOP	200	4,4-5,6	3,40	20	2/11/66	Schelling	36	F con.	0026.200.34	
TOP	200	4,4-5,6	3,20	30	2/8,5/60	Panhans, Scheer	36	F con.	0026.200.30	
	200	4,4-5,6	3,20	50	3/13/80	Giben	42	F con.	0026.201.50	
TOP	200	4,4-5,6	3,20	65	2/9/100 2/9/110	Biesse	36	F con.	0026.200.65	
	200	4,4-5,6	3,20	80	2/14/110	Gabbiani, SCM	36	F con.	0026.200.80	
	200	4,8-5,8	3,50	30	2/8,5/60	Scheer	36	F con.	0026.200.32	
TOP	200	4,8-5,8	3,50	45		Homag	36	F con.	0026.200.45	
TOP	200	4,8-5,8	3,50	65	2/9/100 2/9/110	Biesse	36	F con.	0026.200.66	
	200	5,0-5,8	3,50	20	2/11/66	Schelling	36	F con.	0026.200.20	
	200	5,5-6,6	3,80	20	2/11/66	Schelling	36	F con.	0026.200.23	
	200	5,9-6,9	3,50	45		Homag	36	F con.	0026.200.47	
	200	6,2-7,2	4,20	20	2/11/66	Schelling	36	F con.	0026.200.24	
	200	6,2-7,2	4,20	45		Homag	36	F con.	0026.200.46	
NEW	200	7,0-8,0	5,00	20	2/9/60	Anthon	36	F con.	0026.200.27	
NEW	215	3,7-4,5	2,80	50	2/7/80	Giben	32	F con.	0026.215.53	
	215	4,4-5,6	3,20	50	2/7/80 3/15/80	Giben	42	F con.	0026.215.50	
NEW	215	4,8-5,8	3,50	50	2/7/80	Giben Prismatic 3 & Tetramatic	42	F con.	0026.215.51	
NEW	220	3,3-4,1	2,40	45		Homag SAWTEQ B-320 flexTec (HPS 320 flexTec)	60	F con.	0026.220.46	
	220	6,4-7,4	4,40	20		Schelling	36	F con.	0026.220.20	
NEW	280	4,4-5,2	3,20	45		Homag SAWTEQ B-300 (HPP 300) & HPP 350	72	F con.	0026.280.47	
NEW	300	3,7-4,5	2,80	30	2/11/73 2/13/94	Schelling (bis 2015)	36	F con.	0026.300.33	
	300	4,4-5,2	3,20	30	2/11/73 2/13/94	Schelling Postforming	36	F con.	0026.300.30	
	300	4,4-5,6	3,50	50	3/15/80	Giben	48	F con.	0026.300.50	
	300	4,8-5,6	3,20	65	2/9/110	Biesse Postforming	72	F con.	0026.300.66	

0026 Circular scoring saw blade
Scoring of wood-based material

DP-Design
see DP-chapter on page 152

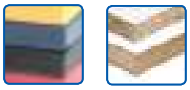

Design: Alternate top bevel tooth, one-piece

D mm	B mm	b mm	d mm	NL mm	Machine	Z	Tooth	Order No.	Price [PG 01]
80	3,10	2,20	20		Striebig, Compact	12	W	0026.080.21	
80	3,38	2,20	20		Striebig, Holzkraft, Felder	16	W	0026.080.22	
125	3,35	2,40	22			24	W	0026.125.23	
140	4,4-5,6	3,40	45		Euromac (Holzher)	28	W con.	0026.140.45	
180	4,55	3,50	30		Panhans Postforming	36	W	0026.180.31	
190	4,0-5,2	2,80	50	2/7/80	Giben	32	W con.	0026.190.50	
200	4,6-5,6	3,50	45		Homag Postforming	36	W con.	0026.200.38	
220	4,55	3,60	20	2/9/62	Schelling Postforming	48	W AW	0026.220.21	
NEW 280	3,40	2,40	45		Homag Postforming	60	W	0026.280.48	
280	5,00	3,50	45		Homag Postforming	84	W	0026.280.45	
280	4,8-5,8	3,50	45		Homag Postforming	72	W con.	0026.280.46	
NEW 300	3,7-4,5	2,80	65	2/9/100 2/9/110	Biesse Postforming	48	W con.	0026.300.70	
NEW 300	3,80	2,80	65	2/9/100 2/9/110	Biesse Postforming	72	W	0026.300.72	
NEW 300	4,1-4,9	3,00	65	2/9/100 2/9/110	Biesse Postforming	48	W con.	0026.300.71	
300	4,55	3,20	20			72	W	0026.300.21	
300	4,55	3,20	30	2/11/73	Schelling Postforming	72	W	0026.300.31	
300	4,55	3,20	65	2/9/100 2/9/110	Biesse Postforming	72	W	0026.300.68	
300	4,60	3,20	65	2/9/100 2/9/110	Biesse Postforming	72	W	0026.300.65	
300	4,60	3,20	80	2/14/110	Gabbiani Postforming, SCM	72	W	0026.300.80	
300	4,4-5,2	3,20	30	2/11/73	Schelling Postforming	48	W con.	0026.300.32	
300	4,4-5,6	3,20	65	2/9/100 2/9/110	Biesse Postforming	48	W con.	0026.300.69	
300	4,8-5,8	3,50	65	2/9/110	Biesse Postforming	48	W con.	0026.300.67	
340	5,00	3,50	45	3/14/65	Homag Postforming	108	W	0026.341.49	
NEW 350	3,8	2,8	65	2/9/100 2/9/110	Biesse Postforming	72	W	0026.350.67	
NEW 350	4,2	3	65	2/9/100 2/9/110	Biesse Postforming	72	W	0026.350.68	
350	4,60	3,20	65	2/9/110	Biesse Postforming	72	W	0026.350.66	
350	5,00	3,50	65	2/9/110	Biesse Postforming	72	W	0026.350.65	

0010 Universal circular saw blade

Longitudinal cut and cross cut

Application:	Longitudinal cut, Cross cut
Material:	Solid wood soft and hard, plywood, thermoplastic material
Machine:	Bench saw
Design:	Chip-thickness limited design (SDB), ♪ = Soundstar Design: noise reduced
Tooth:	Alternate top bevel tooth (W), HW
Feed:	MAN / MEC

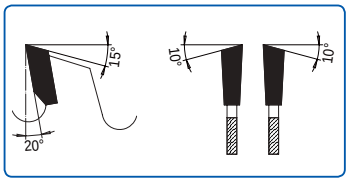

	D mm	B mm	b mm	d mm	NL mm	Z	Tooth	Order No.	Price [PG 01]
	250	3,20	2,20	30	NLK	24	W, SDB	0010.250.30	
	300	3,20	2,20	30	NLK	28	W, SDB	0010.300.30	
	315	3,20	2,20	30	NLK	28	W, SDB	0010.315.30	
TOP	350	3,20	2,20	30	NLK	32	W, SDB	0010.350.30	
♪	350	3,20	2,20	30	NLK	32	W, SDB	0110.350.30	
TOP	350	3,60	2,40	30	NLK	32	W, SDB	0010.350.31	
TOP	400	3,60	2,40	30	NLK	36	W, SDB	0010.400.30	
TOP	450	4,40	2,80	30	NLK	40	W, SDB	0010.450.30	
	500	4,40	2,80	30	NLK	44	W, SDB	0010.500.30	

0012 Universal circular saw blade

Longitudinal cut and cross cut

Application:	Longitudinal cut, Cross cut and planing cut
Material:	Solid wood soft and hard, exotic wood, veneer packs, plywood and chipboard
Machine:	Sizing saw
Tooth:	Alternate top bevel tooth (W), HW
Feed:	MAN / MEC

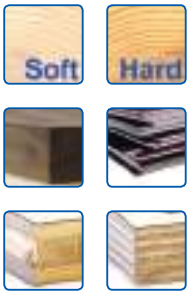

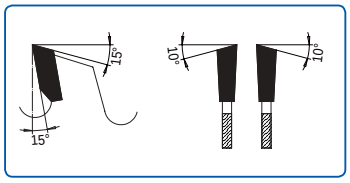

	D mm	B mm	b mm	d mm	NL mm	Z	Tooth	Order No.	Price [PG 01]
TOP	250	3,20	2,20	30	NLK	40	W	0012.250.30	
	300	3,20	2,20	30	NLK	36	W	0012.300.29	
TOP	300	3,20	2,20	30	NLK	48	W	0012.300.30	
	350	3,20	2,20	30	NLK	42	W	0012.350.29	
	350	3,20	2,20	30	NLK	54	W	0012.350.30	
	400	3,60	2,40	30	NLK	60	W	0012.400.30	
TOP	450	4,00	2,80	30	NLK	66	W	0012.450.30	
	500	4,00	2,80	30	NLK	72	W	0012.500.30	

0013 Universal Circular saw blade
Longitudinal cut and cross cut

Application:	Longitudinal cut, cross cut, planing cut
Material:	Solid wood soft and hard, exotic wood, veneer packs, plywood, chipboard
Machine:	Sizing saw
Design:	Thin kerf
Tooth:	Alternate top bevel tooth (W), HW
Feed:	MAN / MEC

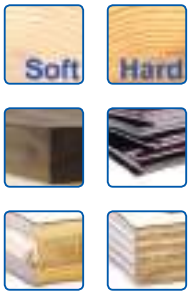

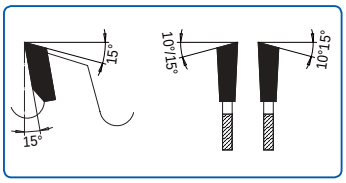

D mm	B mm	b mm	d mm	NL mm	Z	Tooth	Order No.	Price [PG 01]
180	2,40	1,80	30	NLK	30	W	0013.180.30	
200	2,00	1,40	30	NLK	34	W	0013.200.31	
200	2,40	1,80	30	NLK	36	W	0013.200.30	
250	2,70	2,00	30	NLK	40	W	0013.250.30	
250	2,10	1,40	30	NLK	42	W	0013.250.31	
250	2,10	1,40	30	NLK	80	W	0013.250.32	
300	2,70	2,00	30	NLK	48	W	0013.300.30	
350	2,70	2,00	30	NLK	54	W	0013.350.30	

0014 Universal circular saw blade
Longitudinal cut and cross cut

DP-Design
see DP-chapter on page 152

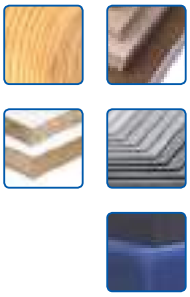

Application:	Longitudinal cut, cross cut; for universal application
Material:	Solid wood, panel material raw, one-side coated, paper-based laminate, thermoplastic material
Machine:	Sizing saw, clipping saw
Design:	♪ = Soundstar design: noise reduced • = with copper plugs; chip-thickness limited design (SDB)
Tooth:	Alternate top bevel tooth (W), Flat tooth (F), Alternate top bevel tooth with axial angle (W, AW), HW
Feed:	MAN / MEC

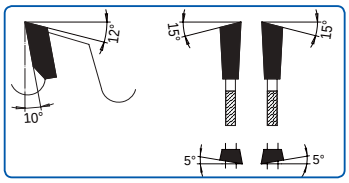

Fig.: Alternate top bevel tooth with axial angle (W, AW)

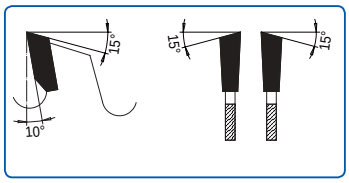

Fig.: Alternate top bevel tooth (W)

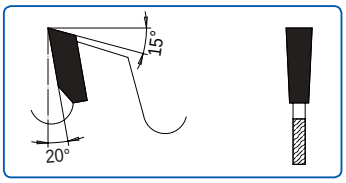

Fig.: Flat tooth (F)

	D mm	B mm	b mm	d mm	NL mm	Z	Tooth	Order No.	Price [PG 01]
	150	3,20	2,20	30		24	W	0014.150.30	
	150	3,20	2,20	30		36	W	0014.150.33	
	180	3,20	2,20	30	NLK	30	W	0014.180.30	
	180	3,20	2,20	30	NLK	42	W	0014.180.33	
	200	3,20	2,20	30	NLK	36	W	0014.200.30	
	200	3,20	2,20	30	NLK	48	W	0014.200.31	
	220	3,20	2,20	30	NLK	36	W	0014.220.30	
	220	3,20	2,20	30	NLK	40	W	0014.220.31	
	230	3,20	2,20	30	NLK	40	W	0014.230.30	
	250	3,20	2,20	30	NLK	48	W	0014.250.30	
TOP	250	3,20	2,20	30	NLK	60	W	0014.250.31	
	300	3,20	2,20	30	NLK	36	W	0014.300.33	
TOP	300	3,20	2,20	30	NLK	54	W	0014.300.30	
TOP	300	3,20	2,20	30	NLK	72	W	0014.300.31	
♪	300	3,20	2,20	30	NLK	72	W	0114.300.31	
	330	3,20	2,20	30	NLK	80	W	0014.330.30	
TOP	350	3,50	2,40	30	NLK	54	W	0014.350.30	
♪	350	3,50	2,40	30	NLK	54	W	0114.350.30	
TOP	350	3,50	2,40	30	NLK	72	W	0014.350.31	
TOP	350	3,50	2,40	30	NLK	84	W	0014.350.33	
♪	350	3,50	2,40	30	NLK	84	W	0114.350.33	
	400	3,50	2,40	30	NLK	48	W	0014.400.29	
TOP	400	3,50	2,40	30	NLK	60	W	0014.400.30	
TOP	400	3,50	2,40	30	NLK	84	W	0014.400.34	
	400	4,40	2,80	30	NLK	84	W	0014.400.01	
TOP	400	3,50	2,40	30	NLK	96	W	0014.400.31	
♪	400	3,50	2,40	30	NLK	96	W	0114.400.31	
	400	3,50	2,40	35		96	W	0014.400.36	
	400	3,60	2,80	30	2/10/60	120	W, AW	0014.400.37[1)]	

0014 Universal circular saw blade
Longitudinal cut and cross cut

DP-Design
see DP-chapter
on page 152

	D mm	B mm	b mm	d mm	NL mm	Z	Tooth	Order No.	Price [PG 01]
	450	4,40	2,80	30	NLK	40	W	0014.450.29	
	450	4,40	2,80	80	2/13/100	40	W	0014.450.80[2)]	
TOP	450	4,40	3,00	30	NLK	60	W	0014.450.30	
	450	4,80	3,00	30	NLK	84	W	0014.450.01	
	450	4,40	3,00	30	NLK	96	W	0014.450.31	
	500	5,20	3,80	30	2/10/80 2/15/63	100	W	0014.500.32	
	500	5,20	3,80	30	NLK	72	W	0014.500.30	
	500	5,60	3,60	30	2/10/80	84	W	0014.500.01	
TOP	550	4,80	3,40	30	NLK	44	W	0014.550.29	
	550	5,20	3,80	30	2/10/80	84	W	0014.550.30	
	550	5,20	3,80	30	NLK	84	W	0014.550.31[3)]	
	550	5,80	3,80	30	2/10/80	96	W	0014.550.01	
	570	4,80	3,40	30	2/10/80	108	W	0014.570.30	
	575	5,90	3,60	30	1/18/90 1/18/100	80	W	0014.575.30	
	600	5,70	4,00	30	2/10/80 2/15/63	110	W	0014.600.33	
•	600	5,40	4,00	30	2/10/80 2/15/63	172	W	0014.600.32	
	600	5,20	3,80	30	2/10/80 2/15/63	72	W	0014.600.30	
	650	5,90	4,20	30	2/10/80 2/15/63	100	W	0014.650.30	

1) = Weinig Dimter
2) = Irion/Raimann
3) = Altendorf, Martin Pre X, SCM

Dimensions especially for trimming machines

	D mm	B mm	b mm	d mm	NL mm	Z	Tooth	Machine	Order No.	Price [PG 01]
NEW	555	5,20	3,60	55	6/6,6/75	54 + 2 + 2	W	Weinmann	0004.555.55	
	640	5,40	3,60	30	NLK	36 + 2 + 2	F, SDB	Mafell FSG240	0004.640.31	
	700	6,00	4,20	30		60	W	Krüsi	0014.700.30	
	700	6,20	4,20	30	2/18/100	84	W		0014.700.01	
	700	6,50	4,40	30		110	W		0014.700.02	
	720	6,00	4,40	30	2/8,5/90	72	W	Handegger	0014.720.30	
	735	6,00	4,40	30	2/8,5/90	48 + 2 + 2	W, SDB	Handegger	0004.735.30	
	735	6,00	4,40	30	2/8,5/90	72	W	Handegger	0014.735.30	
	750	6,50	4,50	40	2/10,5/60	48 + 2 + 2	W, SDB	Schneider	0004.750.40	
	750	6,50	4,50	40	2/10,5/60	60	W	Schneider	0014.750.40	
	750	6,80	5,00	30		60	W	Krüsi	0014.750.30	
	750	7,00	4,80	60	2/12,5/240	120	W	Springer	0014.750.60	
	760	6,00	4,40	30	4/8,3/90 2/14/400	72	W	Handegger	0014.760.30	
	800	6,00	4,40	30	4/8,3/90 2/14/400	48 + 2 + 2 + 2	W	Handegger	0004.800.30	
	800	6,00	4,40	30	4/8,3/90 2/14/400	80	W	Handegger	0014.800.30	
	800	7,00	5,00	40		84	W	Paul	0014.800.40	

0015 Universal circular saw blade
Longitudinal cut and cross cut

DP-Design
see DP-chapter on page 152

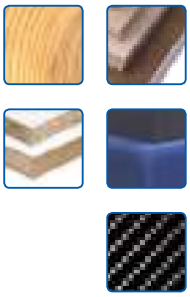

Application:	Longitudinal cut, cross cut For thin panel material
Material:	Solid wood, panel material raw, one-side coated, thermoplastic material, thermosetting plastic
Machine:	Sizing saw
Design:	Saw blade with high number of teeth ♪ = Soundstar design: noise reduced
Tooth:	Alternate top bevel tooth (W), HW
Feed:	MAN / MEC

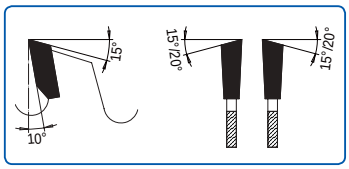

	D mm	B mm	b mm	d mm	NL mm	Z	Tooth	Order No.	Price [PG 01]
	150	3,20	2,20	30		48	W	0015.150.30	
	180	3,20	2,20	30	NLK	54	W	0015.180.30	
	200	3,20	2,20	30	NLK	60	W	0015.200.30	
	220	3,20	2,20	30	NLK	64	W	0015.220.30	
	230	3,20	2,20	30	NLK	64	W	0015.230.30	
	250	3,20	2,20	30	NLK	80	W	0015.250.30	
♪	250	3,20	2,20	30	NLK	80	W	0115.250.30	
	300	3,20	2,20	30	NLK	96	W	0015.300.30	
♪	300	3,20	2,20	30	NLK	96	W	0115.300.30	
	350	3,20	2,20	30	NLK	108	W	0015.351.30	
	350	3,50	2,40	30	NLK	108	W	0015.350.30	
♪	350	3,50	2,40	30	NLK	108	W	0115.350.30	
	370	3,50	2,40	30	NLK	108	W	0015.370.30	
	400	3,50	2,40	30	NLK	120	W	0015.400.30	
	400	3,50	2,40	35		120	W	0015.400.35	
	450	4,00	2,80	30	NLK	138	W	0015.450.30	
	450	4,80	3,50	30	NLK	138	W	0015.450.31	
	500	4,80	3,50	70	6/8/220	96	W	0015.500.70	
	500	4,00	2,80	30	NLK 2/10/80	144	W	0015.500.30	
	500	4,80	3,50	30	NLK 2/10/80	144	W	0015.500.31	

0515 Universal Plus

The improved universal circular saw blade for cross cuts and mitre cuts.

DP-Design
see DP-chapter
on page 152

Your benefits at a glance:

- Specific tooth geometry, aggressive cutting angle
- Very high number of teeth
- Low cutting pressure
- Optimized noise level due to special laser ornaments

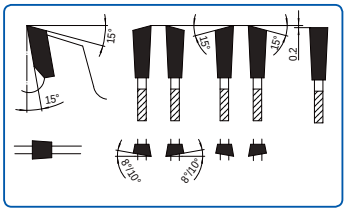

Application:	Trimming of wood-based material in finish cut quality
Material:	Laminated wood-based material including material with very thick top layers, solid wood, plastic profiles, synthetically coated ledges
Machine:	Vertical panel sizing saw, trimming saw, CNC or machining centre, double mitre saw
Design:	Reduced kerf; low noise due to specific laser ornaments
Tooth:	Alternate top bevel tooth with axial angle - alternate top bevel tooth with axial angle - flat tooth (WWF), HW
Feed:	MAN / MEC

D mm	B mm	b mm	d mm	NL mm	Machine	Z	Tooth	Order No.	Price [PG 01]
100	4,00	2,80	30		Weeke BHX series 050/055	30	WWF	0515.100.30	
100	5,00	4,00	30		Weeke BHX series 050/055	30	WWF	0515.100.31	
120	4,00	2,80	20		SCM / Morbidelli	35	WWF	0515.120.20	
120	5,00	4,00	20		SCM / Morbidelli	35	WWF	0515.120.21	
125	4,00	2,80	30	cs pin holes* 4/5,5/48 clockwise 4/5,5/48 counterclockwise	Weeke BHX series 500 and other BAZ, BOF	35	WWF	0515.125.30	
125	5,00	4,00	30	cs pin holes* 4/5,5/48 clockwise 4/5,5/48 counterclockwise	Weeke BHX series 500 and other BAZ, BOF	35	WWF	0515.125.31	
180	3,00	2,20	30	NLK		60	WWF	0515.180.30	
200	3,00	2,20	30	NLK		65	WWF	0515.200.30	
220	3,00	2,20	30	NLK		70	WWF	0515.220.30	
240	3,00	2,20	30	cs pin holes* 4/5,5/52 clockwise 4/5,5/52 counterclockwise	Homag BAZ	75	WWF	0515.240.30	
240	3,00	2,20	40	cs pin holes* clockwise 8/5,5/52	Homag BAZ Flex 5/5+, Weeke	75	WWF	0515.240.40	
250	3,00	2,20	30	NLK		80	WWF	0515.250.30	
255	3,00	2,20	30	NLK		80	WWF	0515.255.30	
303	3,00	2,20	30	NLK	Striebig Altendorf	100	WWF	0515.303.30	
355	3,00	2,20	30	NLK		100	WWF	0515.355.30	
405	3,00	2,20	30	NLK		120	WWF	0515.405.30	
450	3,60	2,80	30	NLK		130	WWF	0515.450.30	
500	3,60	2,80	30	NLK		145	WWF	0515.500.30	

*Diameterers countersunk pin holes: 10,5 mm

Further information:
ake.de/en/universal-plus

0016 Universal circular saw blade

Longitudinal cut and cross cut

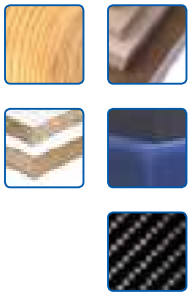

Application:	Longitudinal cut, cross cut; for cutting plastic material and profiled wood
Material:	Solid wood, panel material raw, one-side coated thermoplastic material, thermosetting plastic
Machine:	Sizing saw
Design:	Thin kerf, noise reduced • = with copper plugs
Tooth:	Alternate top bevel tooth (W), HW
Feed:	MAN / MEC

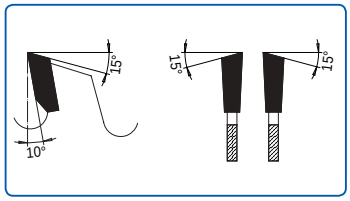

	D mm	B mm	b mm	d mm	NL mm	Z	Tooth	Order No.	Price [PG 01]
	180	2,40	1,80	30	NLK	54	W	0016.180.30	
•	200	2,40	1,80	30	NLK	60	W	0016.200.30	
•	250	2,40	1,80	30	NLK	80	W	0016.250.29	
•	250	2,70	2,00	30	NLK	80	W	0016.250.30	
•	300	2,40	1,80	30	NLK	96	W	0016.300.29	
•	300	2,70	2,00	30	NLK	96	W	0016.300.30	
•	350	2,70	2,00	30	NLK	108	W	0016.350.30	

0017 Universal circular saw blade
Processing of profile and veneer

Application:	Longitudinal cut, cross cut
Material:	Thin-walled acrylic glass, pertinax, circuit boards, epoxy resin,veneer packs, paper-based laminates, profiles
Machine:	Sizing saw, veneer saw
Design:	Thin-kerf; extra thin-kerf with stepped saw body; ♪ = Soundstar design: noise reduced
Tooth:	Alternate top bevel tooth (W), HW
Feed:	MAN / MEC

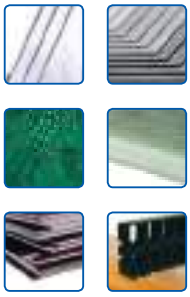

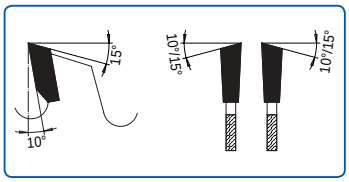

D mm	B mm	b mm	d mm	NL mm	Machine	Z	Tooth	Order No.	Price [PG 01]
150	2,20	1,60	30			60	W	0017.150.30	
160	2,20	1,60	16	1/6/33	Scheer	64	W	0017.160.16	
180	2,20	1,60	16	1/6/33	Scheer Mayer	72	W	0017.180.16	
200	2,20	1,60	30	NLK		80	W	0017.200.30	
220	2,20	1,60	30	NLK		88	W	0017.220.30	
250	2,20	1,60	30	NLK		100	W	0017.250.30	
300	2,20	1,60	30	NLK		120	W	0017.300.30	
♪ 300	2,20	1,60	30	NLK		120	W	0117.300.30	

With stepped saw body

D mm	B mm	H mm	b mm	d mm	NL mm	Machine	Z	Tooth	Order No.	Price [PG 01]
160	1,50	38	1,00/2,40	16	1/6/33	Scheer	48	W	0017.161.16	
180	1,50	38	1,00/2,40	16	1/6/33	Scheer Mayer	54	W	0017.181.16	
180	1,50	38	1,00/2,40	30	2/7/42 2/10/60		54	W	0017.181.30	
200	1,50	38	1,00/2,40	30			60	W	0017.201.30	
250	1,50	38	1,00/2,40	30			80	W	0017.251.30	

0018 Universal circular saw blade
Cross cut with negative hook angle

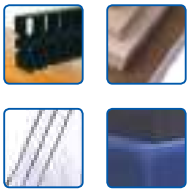

Application:	Cross cut, top shaft through-feed machine
Material:	Plastic laminated profiles, wooden material, thin acrylic glass, thermoplastic material, thermosetting plastic
Machine:	Top clipping saw, pendulum saw and radial cut-off saw, table saw
Design:	Thin-kerf, rigid saw body design, special geometry for reduction of cutting pressure
Tooth:	Alternate top bevel tooth (W, neg.), Flat tooth negativ (F, neg.), HW
Feed:	MAN / MEC

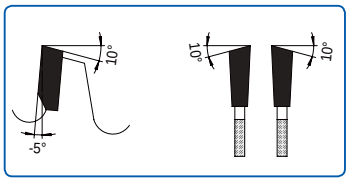

Fig.: Alternate top bevel tooth negativ (W, neg.)

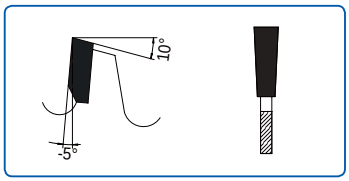

Fig.: Flat tooth negativ (F, neg.)

	D mm	B mm	b mm	d mm	Machine	Z	Tooth	Order No.	Price [PG 01]
	250	2,20	1,80	30		100	W, neg.	0018.250.30	
	250	2,20	1,80	32		130	F, neg.	0018.250.33	
	250	3,20	2,20	20		48	W, neg.	0018.250.21	
	250	3,20	2,20	30		60	W, neg.	0018.250.35	
	250	3,20	2,20	30		80	W, neg.	0018.250.34	
TOP	300	2,20	1,80	30		120	W, neg.	0018.300.30	
TOP	300	3,20	2,20	30		72	W, neg.	0018.300.34	
TOP	300	3,20	2,20	30		96	W, neg.	0018.300.33	
	305	2,80	2,00	30	Elu PS374	60	W, neg.	0018.305.30	
	350	3,20	2,20	40	Graule	72	W, neg.	0018.350.40	
	420	3,50	2,40	40	Graule	120	W, neg.	0018.420.40	
	420	3,80	2,60	40	Graule	48	W, neg.	0018.420.39	

0020 Circular saw blade for plastics
Bombastic

Your benefits at a glance:

- Almost burr free cutting edge
- Hardly any remachining necessary
- Low vibration

Application:	Finish cut in homogeneous material Recommendation: use emulsion as a coolant
Material:	Thermoplastics: PC, PMMA
Machine:	Panel sizing machine
Design:	Type A: Thermoplastics, thin-walled, low tensile strength of max. 50-60 N/mm² Type C: Thermoplastics, for stacks of material, tensile strength > 50 N/mm²
Tooth:	Type A: Alternate top bevel tooth chamfered (WS), HW Type C: Triple-chip - triple-chip tooth (TT), HW
Feed:	MEC

D mm	B mm	b mm	d mm	NL mm	Machine	Type	Z	Tooth shape	Order No.	Price [PG 03]
300	2,90	2,20	30	NLK		A	96	WS	0020.300.16	
303	3,20	2,20	30	NLK		A	60	WS	0020.303.31	
303	3,20	2,20	30	NLK		C	60	TT	0020.303.33	
350	4,40	3,20	30	NLK		A	72	WS	0020.350.31	
350	4,40	3,20	30	NLK		C	72	TT	0020.350.33	
380	4,40	3,20	60	2/14/100	Homag	C	72	TT	0020.380.14	
380	4,40	3,20	65	2/9/110	Selco	C	72	TT	0020.380.65	
380	4,40	3,20	65	2/9/110	Selco	C	84	TT	0020.380.66	
380	4,80	3,50	60	2/14/100 2/14/125	Homag	A	84	WS	0020.380.31	
380	4,80	3,50	60	2/14/100 2/14/125	Homag	C	84	TT	0020.380.33	
400	4,80	3,50	30			C	72	TT	0020.400.33	
430	4,40	3,20	65	2/9/110	Selco	C	72	TT	0020.430.65	
430	4,40	3,20	75	4/15/105	Giben	C	72	TT	0020.430.75	
450	4,80	3,50	60	2/19/120 2/14/125	Homag	A	72	WS	0020.450.61	
450	4,80	3,50	60	2/19/120 2/14/125	Homag	C	72	TT	0020.450.63	
460	5,00	3,60	30			C	72	TT	0020.460.33	
480	4,80	3,50	60	2/19/120		A	72	WS	0020.480.62	
480	4,80	3,50	60	2/19/120		C	72	TT	0020.480.61	

0021 Circular panel sizing saw blade
Sizing

DP-Design
see DP-chapter on page 152

Application:	Longitudinal and cross cut
Material:	Panel material raw and veneered, duroplastic material
Machine:	Sizing saw combined with scoring aggregate
Design:	♪ = Soundstar design: noise reduced • = with copper plugs
Tooth:	Flat - triple-chip tooth (FT), HW
Feed:	MAN / MEC

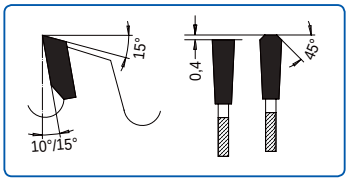

		D mm	B mm	b mm	d mm	NL mm	Machine	Z	Tooth shape	Order No.	Price [PG 01]
	•	220	3,20	2,20	30	NLK		64	FT	0021.220.30	
	•	240	3,20	2,20	30	2/6/42	Scheer	54	FT	0021.240.30	
	•	250	3,20	2,20	30	NLK		60	FT	0021.250.30	
TOP	•	250	3,20	2,20	30	NLK		80	FT	0021.250.31	
	•	254	3,0	2,0	30	NLK	Striebig Compact	42	FT	0021.254.30	
	•	280	3,20	2,20	30	NLK		60	FT	0021.280.30	
TOP	•	300	3,20	2,20	30	NLK		72	FT	0021.300.30	
TOP	•	300	3,20	2,20	30	NLK		96	FT	0021.300.31	
	♪	300	3,20	2,20	30	NLK		96	FT	0121.300.31	
	•	303	3,00	2,20	30	NLK	Striebig Evolution, Control	60	FT	0021.303.30	
	•	303	3,20	2,20	30	NLK		96	FT	0021.304.30	
	•	305	3,20	2,20	30		Scheer FM16	60	FT	0021.305.29	
	•	350	3,20	2,20	30	NLK		84	FT	0021.350.30	
	•	350	3,50	2,40	30	NLK		84	FT	0021.351.30	
TOP	•	350	3,20	2,20	30	NLK		108	FT	0021.350.31	
	•	350	3,50	2,40	30	NLK		108	FT	0021.351.31	
	•	400	3,50	2,40	30	NLK		120	FT	0021.400.34	

0221 Super Plus. Tool service life + cutting quality
Sizing

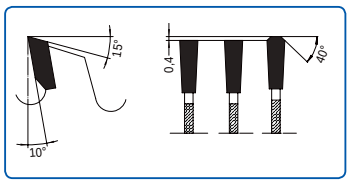

Your benefits at a glance:

Black Belt® Technology

- High productivity
- Short set-up time
- Reduction of costs
- High quality
- Noise reduction

Application:	Longitudinal and cross cut
Material:	Panel material raw and coatet, duroplastic material
Machine:	Sizing saw combined with scoring aggregate
Design:	Noise reduced due to N-slots in the saw body, division of cut (clustered teeth) for longer tool service life and improved cutting quality
Tooth:	Flat - flat - triple-chip tooth (FFT), HW
Feed:	MAN / MEC

D mm	B mm	b mm	d mm	NL mm	Z	Tooth shape	Order No.	Price [PG 01]
250	3,20	2,20	30	NLK	78	FFT	0221.250.30	
300	3,20	2,20	30	NLK	90	FFT	0221.300.30	
350	3,50	2,40	30	NLK	102	FFT	0221.350.30	

0025 Circular panel sizing saw blade
Sizing

Application:	Finish cut in laminated single boards
Material:	Panel material laminated, thermoplastic
Machine:	Vertical panel sizing machine, sizing saw
Design:	Design with reduced vibration for maximum cutting quality ♪ = Soundstar design: Noise reduced • = with copper plugs
Tooth:	Hollow - inverted-V - flat tooth (HDF), HW
Feed:	MAN / MEC

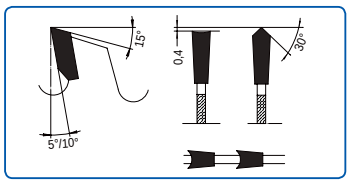

	D mm	B mm	b mm	d mm	NL mm	Z	Tooth shape	Order No.	Price [PG 01]
	160	2,80	2,00	20		34	HDF	0025.160.20	
	180	2,80	1,80	16	1/6/33	36	HDF	0025.180.16	
	200	2,80	1,80	30	NLK	36	HDF	0025.200.30	
	220	3,20	2,20	30	NLK	40	HDF	0025.220.30	
	220	3,20	2,20	30	NLK	48	HDF	0025.220.31	
TOP •	250	3,20	2,20	30	NLK	48	HDF	0025.250.30	
TOP •	303	3,20	2,20	30	NLK	60	HDF	0025.302.30	
♪	303	3,20	2,20	30	NLK	60	HDF	0125.302.30	
•	350	3,20	2,20	30	NLK	72	HDF	0025.350.30	
•	400	3,20	2,20	30	NLK	78	HDF	0025.400.30	
♪	400	3,50	2,40	30	NLK	78	HDF	0125.400.30	

0025 Melody. Wellness for the ears
Sizing

Your benefits at a glance:

- Noise reduction
- Very sophisticated tooth geometry
- Perfect cuts
- Without unpleasant noise

Application:	For maximum cutting quality
Material:	Panel material laminated, thermoplastic
Machine:	Vertical panel sizing machine, sizing saw
Design:	Noise reduced design with V-damping slots and vario gullet
Tooth:	Hollow - flat - triple-chip tooth (HFT), 0° hook angle, HW
Feed:	MAN / MEC

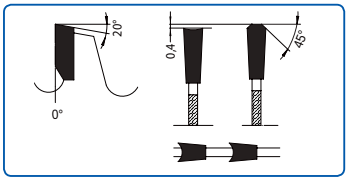

D mm	B mm	b mm	d mm	NL mm	Z	Tooth shape	Order No.	Price [PG 01]
250	3,20	2,20	30	NLK	48	HFT	0025.250.33	
303	3,50	2,40	30	NLK	60	HFT	0025.308.34	
303	3,50	2,40	30	NLK	66	HFT	0025.303.30	

0225 Super Plus. Tool service life + cutting quality
Sizing

Your benefits at a glance:

Black Belt® Technology

- High productivity
- Short set-up time
- Reduction of costs
- High quality
- Noise reduction

Application:	For longer tool life and better cutting quality
Material:	Panel material laminated, thermoplastic
Machine:	Vertical panel sizing machine, sizing saw
Design:	Noise reduced due to N-slots in the saw body, division of cut (clustered teeth) for longer tool service life and improved cutting quality
Tooth:	Hollow - flat - flat - triple chip tooth (HFFT), HW
Feed:	MAN / MEC

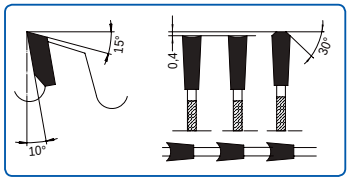

D mm	B mm	b mm	d mm	NL mm	Z	Tooth shape	Order No.	Price [PG 01]
250	3,20	2,20	30	NLK	48	HFFT	0225.250.30	
303	3,20	2,20	30	NLK	60	HFFT	0225.302.30	
350	3,50	2,40	30	NLK	72	HFFT	0225.350.30	
400	3,50	2,40	30	NLK	78	HFFT	0225.400.30	

0027 Circular panel sizing saw blade
Sizing

Application:	Finish cut in laminated single board
Material:	Panel material laminated, thermoplastic
Machine:	Vertical panel sizing machine, sizing saw
Design:	Design with reduced vibration for maximum cutting quality ♪ = Soundstar design: noise reduced • = with copper plugs
Tooth:	Hollow - inverted V - flat tooth negativ (HDF, neg.), HW
Feed:	MAN / MEC

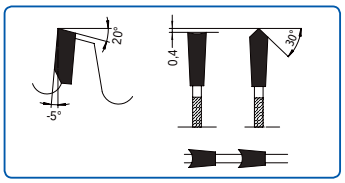

	D mm	B mm	b mm	d mm	NL mm	Z	Tooth shape	Order No.	Price [PG 01]
	220	3,20	2,20	30	NLK	40	HDF, neg.	0027.220.30	
•	250	3,20	2,20	30	NLK	48	HDF, neg.	0027.250.30	
TOP •	303	3,20	2,20	30	NLK	60	HDF, neg.	0027.303.30	
♪	303	3,20	2,20	30	NLK	60	HDF, neg.	0127.303.30	
•	350	3,20	2,20	30	NLK	72	HDF, neg.	0027.350.30	

0030 Scoring saw blade
Spare scoring saw blade

Application:	For scoring and sizing
Material:	Panel material raw and veneered
Machine:	Double-end profiler and edge bander
Design:	* = For AKE / Leuco quick clamping system Tooth geometries can be optimized according to customer's request
Tooth:	Flat tooth (F), HW
Feed:	MEC

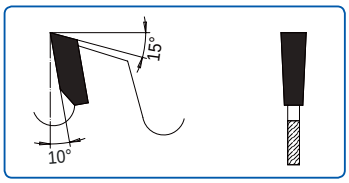

Fig.: Flat tooth (F)

D mm	B mm	b mm	d mm	NL mm	Z	Tooth shape	Order No.	Price [PG 01]
150	3,20	2,20	30		30	F	0030.150.30	
150	3,20	2,20	30		48	F	0030.150.31	
180	3,20	2,20	30		30	F	0030.180.34	
180	3,20	2,20	50	3/22/80 3/6/80	30	F	0030.180.51*	
180	3,20	2,20	30		42	F	0030.180.33	
180	3,20	2,20	50	3/22/80 3/6/80	42	F	0030.180.50*	
180	3,20	2,20	30		54	F	0030.180.31	
180	3,20	2,20	50	3/22/80 3/6/80	54	F	0030.180.52*	
200	3,20	2,20	30		36	F	0030.200.30	
200	3,20	2,20	30		48	F	0030.200.31	
200	3,20	2,20	50	3/22/80 3/6/80	48	F	0030.200.51*	
200	3,20	2,20	30		60	F	0030.200.33	
200	3,20	2,20	50	3/22/80 3/6/80	60	F	0030.200.53*	
255	3,20	2,20	30		60	F	0030.255.31	
305	3,20	2,20	30		54	F	0030.305.31	

Spare scoring saw blade for flange sleeve. Suitable for Homag, IMA, Torwegge

D mm	B mm	b mm	d mm	Z	Tooth shape	Rhs / Lhs	Order No.	Price [PG 01]
180	3,20	2,20	65	42	F	lhs	0030.180.08	
180	3,20	2,20	65	42	F	rhs	0030.180.09	
180	3,20	2,20	65	54	F	lhs	0030.180.06	
180	3,20	2,20	65	54	F	rhs	0030.180.07	

0032 Spare circular saw blade for hogger

suitable for segment hogger

Fig.: Right-hand design

Application:	For sizing panel material
Material:	Wood-based material, raw and coated
Machine:	Double-end profiler and edge bander
Design:	HW saw blade (flat tooth); tooth geometries can be optimized according to customer's request Pin hole countersinking Ø 10.5 mm lhs = countersinking top counter clockwise, rhs = countersinking top clockwise
Tooth:	Flat tooth (F), HW
Feed:	MEC

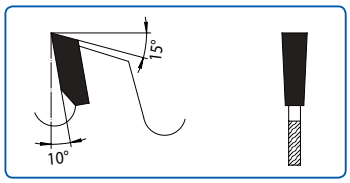

Fig.: AKE Segment hogger Type 0033

Fig.: AKE Segment hogger Type 0034

Fig.: Spare hogger segment

Fine-cut saw blade [0032] for AKE segment hogger [0033], 10.5 mm countersunk (lhs = top counter CW, rhs = top CW)

D mm	B mm	b mm	d mm	NL mm	Z	Tooth shape	Rhs/ Lhs	Order No.	Price [PG 01]
205	4,00	2,80	80	4/6/140	44	F	lhs	0032.201.01	
205	4,00	2,80	80	4/6/140	44	F	rhs	0032.202.01	
205	4,00	2,80	80	4/6/140	60	F	lhs	0032.203.01	
205	4,00	2,80	80	4/6/140	60	F	rhs	0032.204.01	
255	4,00	2,80	80	6/6/190	48	F	lhs	0032.251.02	
255	4,00	2,80	80	6/6/190	48	F	rhs	0032.252.02	
255	4,00	2,80	80	6/6/190	60	F	lhs	0032.253.02	
255	4,00	2,80	80	6/6/190	60	F	rhs	0032.254.02	

Fine-cut saw blade [0032] for AKE segment hogger [0034], 10.5 mm countersunk (lhs = top counter CW, rhs = top CW)

D mm	B mm	b mm	d mm	NL mm	Z	Tooth shape	Rhs/ Lhs	Order No.	Price [PG 01]
205	4,00	2,80	80	4/6/140	44	F	lhs	0032.201.01	
205	4,00	2,80	80	4/6/140	44	F	rhs	0032.202.01	
205	4,00	2,80	80	4/6/140	60	F	lhs	0032.203.01	
205	4,00	2,80	80	4/6/140	60	F	rhs	0032.204.01	
255	4,00	2,80	100	6/6/190	48	F	lhs	0032.255.01	
255	4,00	2,80	100	6/6/190	48	F	rhs	0032.255.02	
255	4,00	2,80	100	6/6/190	60	F	lhs	0032.255.03	
255	4,00	2,80	100	6/6/190	60	F	rhs	0032.255.04	

Spare segment for AKE segment hogger

Denomination	Order No.	Price [PG 01]
HW segment with chip breaker, with threaded pin 1 VE (= 12 pcs.)	0033.012.01	

0032 / 0033 Spare circular saw blade for hogger
suitable for AKE Vario hogger

DP-Design
see DP-chapter on page 152

Fig.: Right-hand design

Application:	For sizing panel material; hogging of residual timber on multi-rip saw without flange sleeve
Material:	Solid wood, panel material raw and veneered
Machine:	Double-end tenoner, multi-rip saw
Design:	One-side acute with axial angle, for improved chip removal lhs = countersinking top counter clockwise rhs = countersinking top clockwise
Tooth:	Tooth one side acute with axial angle (E, AW) Flat tooth with axial angle (F, AW), HW
Feed:	MEC

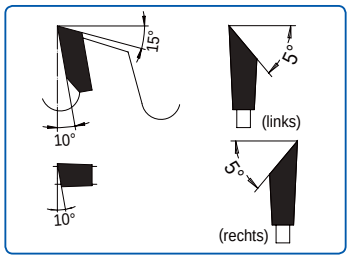

Fig.: Tooth one side acute with axial angle (E, AW)

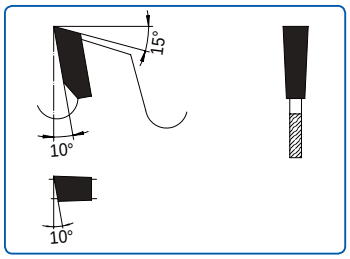

Fig.: Flat tooth with axial angle (F, AW)

Fig.: AKE Vario hogger Type 0033

Fine-cut saw blade [0032] for AKE Vario hogger [0033], 10.5 mm countersunk (lhs = top counter CW, rhs = top CW)

D mm	B mm	b mm	d mm	NL mm	Z	Tooth shape	Rhs/ Lhs	Order No.	Price [PG 01]
255	4,00	2,80	30	12/6/190	48	E, AW	lhs	0032.255.81	
255	4,00	2,80	30	12/6/190	48	E, AW	rhs	0032.255.80	
255	4,00	2,80	30	12/6/190	60	E, AW	lhs	0032.255.83	
255	4,00	2,80	30	12/6/190	60	E, AW	rhs	0032.255.82	
255	4,00	2,80	80	12/6/190	48	E, AW	lhs	0032.255.85	
255	4,00	2,80	80	12/6/190	48	E, AW	rhs	0032.255.84	
255	4,00	2,80	80	12/6/190	60	E, AW	lhs	0032.255.87	
255	4,00	2,80	80	12/6/190	60	E, AW	rhs	0032.255.86	

Hogging saw blade [0033] for AKE Vario hogger [0033]

D mm	B mm	b mm	d mm	NL mm	Z	Tooth shape	Rhs/ Lhs	Order No.	Price [PG 01]
250	5,50	5,00	30	12/6/190	12	F, AW	lhs	0033.250.81	
250	5,50	5,00	30	12/6/190	12	F, AW	rhs	0033.250.82	
250	5,50	5,00	80	12/6/190	12	F, AW	lhs	0033.250.84	
250	5,50	5,00	80	12/6/190	12	F, AW	rhs	0033.250.86	
255	7,00	5,00	30	12/6/190	6	F, AW	lhs	0033.255.85	
255	7,00	5,00	30	12/6/190	6	F, AW	rhs	0033.255.84	
255	7,00	5,00	80	12/6/190	6	F, AW	lhs	0033.255.89	
255	7,00	5,00	80	12/6/190	6	F, AW	rhs	0033.255.88	

0032 0452 Spare circular saw blade for hogger

suitable for saw blade segment hogger

DP-Design
see DP-chapter
on page 152

Fig.: Right-hand design

Compatible:	Leuco • = also suitable for AKE system
Application:	For sizing panel material with scoring aggregate, hogging and double-hogging
Material:	Panel material raw and veneered
Machine:	Double-end profiler and edge bander
Design:	HW saw blade (flat tooth); tooth geometries can be optimized according to customer's request Pin hole countersinking Ø 10.5 mm lhs = countersinking top counter clockwise, rhs = countersinking top clockwise
Tooth:	Flat tooth (F), Flat tooth with axial angle (F, AW), HW
Feed:	MEC

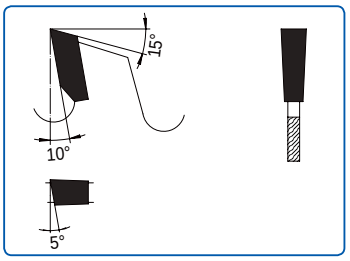

Fig.: Flat tooth
with axial angle (F, AW)

Fig.: Saw blade segment
hogger type 0033

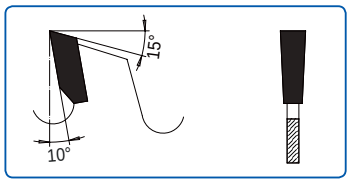

Fig.: Flat tooth (F)

Fig.: Spare HW segment. Suitable
for saw blade segment hogger

Fine-cut saw blade [0032] for AKE segment hogger [0033], 10.5 mm countersunk (lhs = top counter CW, rhs = top CW)

	D mm	B mm	b mm	d mm	NL mm	Z	Tooth shape	Rhs/ Lhs	Order No.	Price [PG 01]
	200	4,00	2,80	80	4/6/140	44/40	F	lhs	0032.201.40	
	200	4,00	2,80	80	4/6/140	44/40	F	rhs	0032.202.40	
	200	4,00	2,80	80	4/6/140	64/60	F	lhs	0032.203.40	
	200	4,00	2,80	80	4/6/140	64/60	F	rhs	0032.204.40	
	220	4,00	2,80	80	6/6/154	60	F, AW	lhs	0032.221.41	
	220	4,00	2,80	80	6/6/154	60	F, AW	rhs	0032.222.41	
•	250	4,00	2,80	80	6/6/200	54/48	F	lhs	0032.250.08	
•	250	4,00	2,80	80	6/6/200	54/48	F	rhs	0032.250.09	
•	250	4,00	2,80	80	6/6/200	78/72	F	lhs	0032.251.80	
•	250	4,00	2,80	80	6/6/200	78/72	F	rhs	0032.250.80	
•	250	4,00	2,80	100	6/6/200	78/72	F	lhs	0032.251.10	
•	250	4,00	2,80	100	6/6/200	78/72	F	rhs	0032.250.10	
	255	4,00	2,80	100	6/6/200	54/48	F	lhs	0032.255.41	
	255	4,00	2,80	100	6/6/200	54/48	F	rhs	0032.256.41	
	255	4,00	2,80	80	6/6/200	60/54	F	lhs	0032.257.41	
	255	4,00	2,80	80	6/6/200	60/54	F	rhs	0032.258.41	

Spare HW segment for saw blade segment hogger

	D mm	Z	Tooth shape	Rhs / Lhs	Order No.	Price [PG 01]
•	200	4	F		0452.000.04	
☐ •	200/250	4	F AW	lhs	0452.002.04	
☐ •	200/250	4	F AW	rhs	0452.001.04	
	250	4	F		0452.000.07	
☐	250	4	unground	lhs	0452.012.04	
☐	250	4	unground	rhs	0452.011.04	
	300	8	F	lhs	0453.002.08	
	300	8	F	rhs	0453.001.08	
	300	10	F	lhs	0453.002.20	
	300	10	F	rhs	0453.001.20	
	350/430	8	F	lhs	0453.502.08	
	350/430	8	F	rhs	0453.501.08	
	350/430	10	F	lhs	0453.502.10	
	350/430	10	F	rhs	0453.501.10	

0032 Spare circular saw blade for hogger
for universal use in third-party product

Fig.: Right-hand design

Application:	For sizing panel material with scoring aggregate, hogging and double-hogging
Material:	Panel material raw and veneered
Machine:	Double-end profiler and edge bander
Design:	HW saw blade (flat tooth); tooth geometries can be optimized according to customer's request
Tooth:	Flat tooth (F), HW
Feed:	MEC

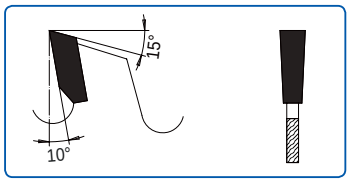

Fine-cut saw blade [0032] without pinholes

D mm	B mm	b mm	d mm	Z	Tooth shape	Order No.	Price [PG 01]
205	4,00	2,80	80	44	F	0032.202.00	
205	4,00	2,80	80	60	F	0032.204.00	
210	4,00	2,80	80	44	F	0032.212.00	
210	4,00	2,80	80	60	F	0032.214.00	
255	4,00	2,80	80	48	F	0032.252.00	
255	4,00	2,80	80	60	F	0032.254.00	
260	4,00	2,80	80	48	F	0032.266.00	
260	4,00	2,80	80	60	F	0032.268.00	
260	4,00	2,80	80	72	F	0032.260.10	

For fitting on individual hogger body; hogger type and brand must be specified;
pinholes and segment gaps are included in the price

0039 Circular saw blade for edge banders

Cross cut blades for edging material

Application:	Edge treatment, bevelling, profiling, clipping
Material:	Edging material
Machine:	Edge bander
Tooth angle:	Hook angle (S), angle with chamfer (FA), axial angle (AW)
Tooth:	Alternate top bevel (W), tooth one side acute (E), Alternate top bevel with axial angle (W, AW), Tooth at one side acute, negative (E, neg.)
Feed:	MEC

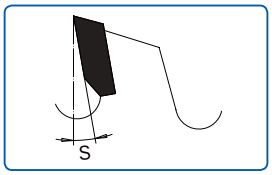

Fig.: Hook angle (S)

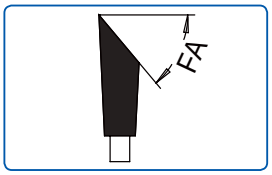

Fig.: Angle with chamfer (FA)

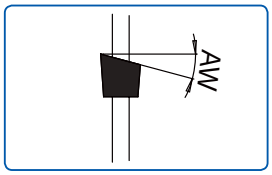

Fig.: Axial angle (AW)

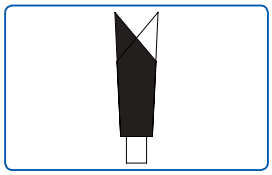
Fig.: Alternate top bevel (W)

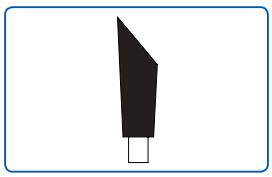
Fig.: One side acute (E, lhs)

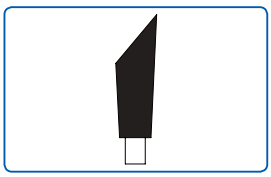
Fig.: One side acute (E, rhs)

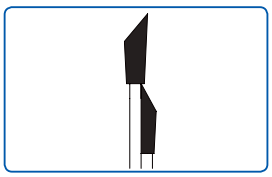
Fig.: Set left (E, lhs)

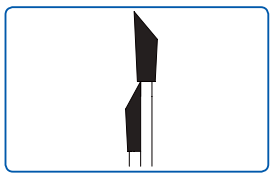
Fig.: Set right (E, rhs)

	D mm	B mm	b mm	d mm	NL mm	Machine	Z	Tooth shape	S	FA	AW	Rhs/ Lhs	Order No.	Price [PG 01]
☐	100/92	5,60	2,20	32		Cross cut saw bevelling set	20	E	10°	30° u. 45°	0°	rhs	0039.100.49	
☐	100/92	5,60	2,20	32		Cross cut saw bevelling set	20	E	10°	30° u. 45°	0°	lhs	0039.100.43	
☐	100	2,40	1,60	22	2/4/30	Holzher, EBM, Hebrock	12	W	10°	10°	0°		0039.100.23	
	100	3,20	2,20	32		Homag, Wilmsmeyer	20	E	-5°	30°	5°	lhs	0039.100.21	
	100	3,20	2,20	32		Reich	20	E	-5°	30°	5°	rhs	0039.100.22	
	100	3,20	2,20	32	4/5,5/52	Homag, Raimann, Wilmsmeyer	20	E	10°	20°	10°	lhs	0039.100.01	
	100	3,20	2,20	32	4/5,5/52	Homag, Raimann, Wilmsmeyer	20	E	10°	20°	10°	rhs	0039.100.02	
	100	2,60	1,60	32		Brandt	30	W	10°	15°	0°		0039.100.32	
	100	3,60	2,40	32		Brandt	30	E	-5°	15°	0°	lhs	0039.100.03	
	100	3,60	2,40	32		Brandt	30	E	-5°	15°	0°	rhs	0039.100.04	
☐	110/102	5,80	4,80	40		Cross cut saw bevelling set Homag	20	E	10°	30° u. 45°	0°	lhs	0039.110.18	
☐	110/102	5,80	4,80	40		Cross cut saw bevelling set Homag	20	E	10°	30° u. 45°	0°	rhs	0039.110.19	
	110	3,60	2,50	22		Reich	20	W	10°	20°	0°		0039.110.22	
☐	110	3,60	2,40	32		Homag, Wilmsmeyer	20	W	10°	30°	5°		0039.110.42	
	110	3,20	2,50	40	cs pin holes* 4/5,5/52 top counter cw	Homag	20	E	-5°	45°	5°	lhs	0039.110.43	
	110	3,20	2,50	40	cs pin holes* 4/5,5/52 top counter cw	Homag	20	E	-5°	45°	5°	rhs	0039.110.44	
	120	3,20	2,20	32		Homag	20	W	10°	20°	0°		0039.120.32	
	120	3,60	2,80	40	cs pin holes* 4/6/52 cw 4/6/52 counter cw	Homag	24	W	8°	30°	0°		0039.120.40	

0039 Circular saw blade for edge banders

Cross cut blades for edging material

D mm	B mm	b mm	d mm	NL mm	Machine	Z	Tooth shape	S	FA	AW	Rhs/ Lhs	Order No.	Price [PG 01]
120	3,60	2,80	40	cs pin holes* 4/6/52 cw 4/6/52 counter cw	Homag	36	W	10°	20°	5°		0039.120.41	
125	2,40	1,60	30	cs pin holes* 4/6/48 cw 4/6/48 counter cw	Homag	36	W	10°	30°	0°		0039.125.30	
125	3,20	2,00	30	cs pin holes* 4/5,3/48 cw 4/5,3/48 counter cw	Weeke	36	W	15°	20°	0°		0039.127.34	
140	3,20	2,20	16		Ott	36	W	10°	20°	0°		0039.140.16	
150	3,50	2,40	20		Ocmac, Olympic, Stefani	36	E	10°	20°	10°	lhs	0039.150.08	
150	3,50	2,40	20		Ocmac, Olympic, Stefani	36	E	10°	20°	10°	rhs	0039.150.09	
150	3,50	2,40	22		IMA, Torwegge	48	W	10°	20°	0°		0039.150.41	
160	3,50	2,50	22	4/5,5/52	IMA	36	W	-5°	15°	5°		0039.161.22	
160	3,20	2,20	20		Reich	48	W	10°	20°	0°		0039.160.20	
160	3,20	2,20	22		IMA	48	E	-5°	20°	0°	lhs	0039.160.22	
160	3,20	2,20	22		IMA	48	E	-5°	20°	0°	rhs	0039.160.23	
160	3,20	2,20	22		IMA	48	W	-5°	15°	5°		0039.161.23	
160	3,20	2,20	20	2/5/32	Holzher, IMA	48	W	10°	10°	5°		0039.160.21	
170	3,50	2,20	30	4/5,5/52	Homag, Powerline	48	E	-12°	45°	10°	rhs	0039.170.33	
180	3,20	2,20	30	cs pin holes* 4/5,5/52 top clockwise	Homag	54	W	10°	20°	0°		0039.180.30	
200	3,20	2,20	30	cs pin holes* 4/5,5/52 top clockwise	Homag BAZ	60	W	15°	30°	0°		0039.200.30	
200	3,20	2,20	30	4/6,5/60 2/6,2/42	IMA	64	W	-10°	15°	0°		0039.200.33	
240	3,60	2,20	30	cs pin holes* 4/5,5/52 top clockwise	Homag	54	W	10°	30°	0°		0039.240.30	

*Countersunk pin holes 10.5 mm

0039 I Circular saw blade for CNC machines / BAZ

Pin holes without countersinking

	D mm	B mm	b mm	d mm	NL mm	Z	Tooth shape	Order No.	Price [PG 01]
	100	2,60	1,60	30		12	F	0039.102.30	
	100	2,60	1,60	30		30	W	0039.102.31	
○	120	2,60	1,60	30		12	F	0039.122.30	
	120	2,60	1,60	30		30	W	0039.122.32	
○	125	2,60	1,60	30		12	F	0039.127.30	
○	125	2,60	1,60	30		30	W	0039.127.32	
○	150	2,60	1,60	30		12	F	0039.152.30	
	150	3,20	2,20	30		24	W	0014.150.30	
	150	3,20	2,20	30		36	W	0014.150.33	
	150	3,20	2,20	30		48	W	0015.150.30	
	180	3,20	2,20	30	NLK	30	W	0014.180.30	
	180	3,20	2,20	30	NLK	42	W	0014.180.33	
	180	3,20	2,20	30	NLK	54	W	0015.180.30	
	200	3,20	2,20	30	NLK	36	W	0014.200.30	
	200	3,20	2,20	30	NLK	48	W	0014.200.31	
	200	3,20	2,20	30	NLK	60	W	0015.200.30	

For saw blade aggregates on CNC machines / BAZ

	D mm	B mm	b mm	d mm	NL mm	Z	Tooth shape	Order No.	Price [PG 01]
○	120	2,60	1,60	30	-	12	F	0039.122.30	
	120	2,60	1,60	30	-	30	W	0039.122.32	
○	120	2,60	1,60	20	3/4,5/35 *	12	F	0039.122.31	
○	120	2,60	1,60	20	3/4,5/35 *	30	W	0039.122.33	
○	125	2,60	1,60	30	4/4,5/48 *	12	F	0039.127.31	
	125	2,60	1,60	30	4/4,5/48 *	30	W	0039.127.33	
	125	3,20	2,00	30	8/5,3/48 °	36	W	0039.127.34	
○	160	2,60	1,60	30	4/5,5/52 *	12	F	0039.162.30	
○	160	2,60	1,60	30	4/5,5/52 *	30	W	0039.162.31	
○	160	2,60	1,60	30	4/5,5/52 *	48	W	0039.162.32	
○	180	2,80	1,80	30	4/5,5/52 *	12	F	0039.182.31	
	180	3,20	2,20	30	4/5,5/52 *	30	W	0039.182.34	
○	180	3,20	2,20	30	4/5,5/52 *	42	W	0039.182.36	
	180	3,20	2,20	30	4/5,5/52 *	54	W	0039.180.30	
○	200	2,80	1,80	30	4/5,5/52 *	16	F	0039.202.32	
○	200	3,20	2,20	30	4/5,5/52 *	36	W	0039.202.35	
○	200	3,20	2,20	30	4/5,5/52 *	48	W	0039.202.37	
	200	3,20	2,20	30	4/5,5/52 *	60	W	0039.200.30	
○	220	3,20	2,20	30	4/6,5/60 *	36	W	0039.222.30	
○	220	3,20	2,20	30	4/6,5/60 *	64	W	0039.222.31	
○	240	3,00	2,00	30	4/5,5/52 *	30	W	0039.242.31	
○	240	3,20	2,20	30	4/5,5/52 *	54	FT	0039.242.30	
	240	3,60	2,20	30	4/5,5/52 *	54	W	0039.240.30	
UP	240	3,00	2,20	30	8/5,5/52 °	75	W	0515.240.30	
UP	240	3,00	2,20	40	8/5,5/52 *	75	W	0515.240.40	
○	250	3,20	2,20	35	1/6/50	48	W	0039.252.36	
○	250	3,20	2,20	35	1/6/50	60	W	0039.252.37	
○	250	3,20	2,20	35	1/6/50	80	W	0039.252.38	
○	250	3,20	2,20	30	NLK	48	W	0039.252.31	
○	250	3,20	2,20	30	NLK	60	W	0039.252.33	
○	250	3,20	2,20	30	NLK	80	W	0039.252.35	

* Countersinking pin holes top clockwise
° Alternating countersinking pin holes
UP = Universal Plus

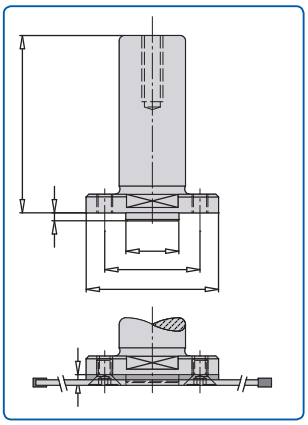

For saw blade adapter Type 81000 and No. 21079

Pin holes with countersinking

	D mm	B mm	b mm	d mm	NL mm	Z	Tooth shape	Order No.	Price [PG 01]
○	150	3,20	2,20	30	4/6,5/48 *	24	W	0039.152.32	
○	150	3,20	2,20	30	4/6,5/48 *	36	W	0039.152.33	
○	150	3,20	2,20	30	4/6,5/48 *	48	W	0039.152.34	
○	180	2,80	1,80	30	4/6,5/48 *	12	F	0039.182.30	
○	180	3,20	2,20	30	4/6,5/48 *	30	W	0039.182.33	
○	180	3,20	2,20	30	4/6,5/48 *	42	W	0039.182.35	
○	180	3,20	2,20	30	4/6,5/48 *	54	W	0039.182.32	
○	200	2,80	1,80	30	4/6,5/48 *	16	F	0039.202.31	
○	200	3,20	2,20	30	4/6,5/48 *	36	W	0039.202.34	
○	200	3,20	2,20	30	4/6,5/48 *	48	W	0039.202.36	
○	200	3,20	2,20	30	4/6,5/48 *	60	W	0039.202.38	

Saw blade adapter see chapter clamping system
* = Countersinking pin holes top counter clockwise

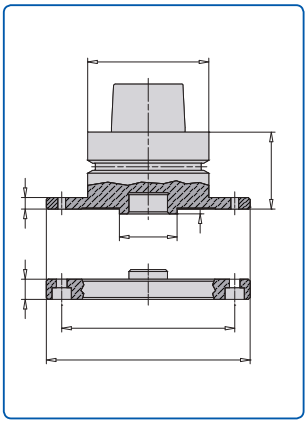

For saw blade adapter Type 81000 and No. 39498

Pin holes without countersinking

	D mm	B mm	b mm	d mm	NL mm	Z	Tooth shape	Order No.	Price [PG 01]
○	250	3,20	2,20	30	8/5,5/90	48	W	0039.252.30	
○	250	3,20	2,20	30	8/5,5/90	60	W	0039.252.32	
○	250	3,20	2,20	30	8/5,5/90	80	W	0039.252.34	
	280	3,20	2,20	30	8/5,5/90	48	W	0039.282.30	
	280	3,20	2,20	30	8/5,5/90	60	W	0039.282.31	
○	280	3,20	2,20	30	8/5,5/90	80	W	0039.282.32	
○	300	3,20	2,20	30	8/5,5/90	36	W	0039.302.30	
	300	3,20	2,20	30	8/5,5/90	54	W	0039.302.31	
○	300	3,20	2,20	30	8/5,5/90	72	W	0039.302.32	
○	350	3,50	2,40	30	8/5,5/90	54	W	0039.352.30	
○	350	3,50	2,40	30	8/5,5/90	72	W	0039.352.31	
○	350	3,50	2,40	30	8/5,5/90	84	FT	0039.352.33	
	350	3,50	2,40	30	8/5,5/90	84	W	0039.352.32	

Saw blade adapter see chapter clamping system

0040 Circular saw blade for aluminium

Panel sizing and cross cut in profile and solid block

Application:	Sizing and cross cut in profiles, plates, blocks, rods
Material:	Aluminium, copper alloy (e.g. brass), plastic material
Machine:	Double mitre saw, sizing saw, CNC machining center, automatic clipping saw
Design:	Rigid design, noise reduced, various numbers of teeth for a variety of applications; improved TC quality; smooth and vibration-free cuts due to optimized saw body design ensures excellent cutting quality; from Ø 250 mm also with riveted and noise-reducing expansion slots • = noise-reduced ♪ = Soundstar: Optimised, noise reduced design
Tooth:	Triple-chip flat tooth, positive (FT), Flat tooth with axial angle (F, AW), HW
Feed:	MAN / MEC

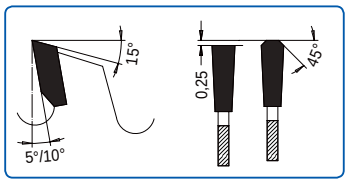

Fig.: Triple-chip flat tooth (FT) till ≤ 20,5

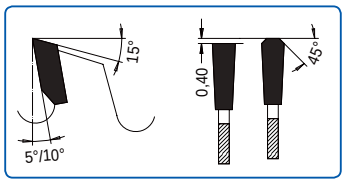

Fig.: Triple-chip flat tooth (FT) from ≥ 20,5

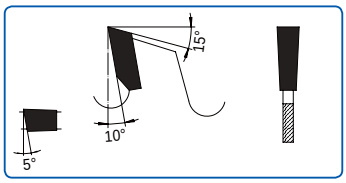

Fig.: Flat tooth with axial angle (F, AW)

	D mm	B mm	b mm	d mm	NL mm	Machine	Z	Tooth shape	Order No.	Price [PG 01]
	170	2,80	2,20	30	2/7/42	Elu, Haffner, Holzher	48	FT	0040.170.30	
	200	3,30	2,80	30	2/7/42	Eisele, Eumenia, Häfele	54	FT	0040.200.30	
	200	2,80	2,20	20	2/6/32	Emmegi, Pressta Eisele	72	FT	0040.200.20	
•	250	3,30	2,80	30	NLK	DeWalt, Elu, Haffner, Holzher, Makita	66	FT	0040.250.30	
	250	3,30	2,80	30	NLK	Elu, Haffner, Makita, Rapid, Ulmia	80	FT	0040.250.35	
	275	3,30	2,80	40	2/9/55 4/12/64	Eisele LMS1, Graule	72	FT	0040.275.40	
	280	3,20	2,60	30	NLK	AEG, ELU TS 161/20, Mafell	96	FT	0040.280.30	
•	300	3,60	3,00	30	NLK	DeWalt,Fezer,Rapid, Schleicher,Ulmia	72	FT	0040.300.29	
•	300	3,50	3,00	30	NLK	DeWalt, Fezer, Rapid, Schleicher, Ulmia	84	FT	0040.300.30	
•	300	3,50	3,00	32	2/10/63	Eisele LSM300, Elu MGS/73, Emmegi, FOM	84	FT	0040.300.33	
•	300	3,30	2,80	30	NLK	DeWalt,Fezer,Rapid, Schleicher,Ulmia	96	FT	0040.300.31	
•	320	3,50	3,00	30	NLK	Rapid UGS/GKS	84	FT	0040.320.30	
•	350	4,20	3,40	30	NLK	DeWalt, Haffner, Pfeiffer, Rapid, Ulmia	54	FT	0040.350.33	
TOP •	350	4,20	3,40	30	NLK	DeWalt, Haffner, Pfeiffer, Rapid, Ulmia	72	FT	0040.350.31	
•	350	3,60	3,00	30	NLK	DeWalt, FOM, Haffner, Pfeiffer, Rapid, Ulmia	84	FT	0040.350.29	
•	350	3,50	3,00	30	NLK	DeWalt, Haffner, Pfeiffer, Rapid, Ulmia	90	FT	0040.350.30	
♪	350	3,50	3,00	30	NLK	DeWalt, Haffner, Pfeiffer, Rapid, Ulmia	90	FT	0140.350.30	
•	350	3,50	3,00	32	2/10/63	Eisele LMS350 M/S, Emmegi, Kasto	90	FT	0040.350.34	
•	350	3,50	3,00	40	2/9/55 4/12/64	Eisele LMS II-PV/VA-L	90	FT	0040.350.40	
•	350	3,20	2,60	30	NLK	DeWalt, Haffner, Pfeiffer, Rapid, Ulmia	108	FT	0040.350.35	

0040 Circular saw blade for aluminium

Panel sizing and cross cut in profile and solid block

	D mm	B mm	b mm	d mm	NL mm	Machine	Z	Tooth shape	Order No.	Price [PG 01]
•	370	3,60	3,00	30	NLK	Rapid DGS	96	FT	0040.370.30	
•	370	3,60	3,00	50	4/15/80	Kaltenbach	96	FT	0040.370.50	
•	400	4,20	3,40	30	NLK	DeWalt, Haffner, Rapid, Ulmia, Wegoma	60	FT	0040.400.33	
•	400	4,20	3,40	30	NLK	DeWalt, Haffner, Rapid, Ulmia, Wegoma	72	FT	0040.400.31	
•	400	3,60	3,00	30	NLK	DeWalt, FOM, Haffner, Rapid, Ulmia, Wegoma	96	FT	0040.400.30	
•	400	3,60	3,00	50	4/15/80	Kaltenbach	96	FT	0040.400.50	
•	400	4,40	3,80	40	2/15/80 2/12/64	Eisele LMSIIID, LSM2, HVG	96	FT	0040.400.40	
•	400	3,60	3,00	30	NLK	DeWalt, Haffner, Rapid, Ulmia, Wegoma	120	FT	0040.400.41	
•	420	3,80	3,00	30	2/10,5/70	Elu, Rapid DGL, SAT	56	FT	0040.420.34	
•	420	3,50	3,00	30	2/10,5/70	Elu, Rapid DGL, SAT	96	FT	0040.420.30	
♪ •	420	3,50	3,00	30	2/10,5/70	Elu, Rapid DGL, SAT	96	FT	0140.420.30	
•	420	4,40	3,80	30	2/10,5/70	Elu DG 102, Rapid DGL, SA 103, SAT	96	FT	0040.420.31	
•	430	3,50	3,00	30	2/10,5/70	Rapid DGL-B, SGS	96	FT	0040.430.30	
•	450	4,80	3,80	30		Harwi, Mayer, Rapid UTK90	72	FT	0040.450.32	
•	450	4,40	3,80	30		Harwi, Mayer, Rapid UTK90	96	FT	0040.450.31	
•	450	4,40	3,80	30		FOM, Harwi, Mayer, Rapid UTK90	102	FT	0040.450.30	
•	450	4,40	3,80	30		Harwi, Mayer, Rapid UTK90	120	FT	0040.450.33	
•	500	4,40	3,60	30		Elumatec, Haffner, Martin	68	FT	0040.500.36	
•	500	5,00	4,00	30		Elumatec, Haffner, Martin	72	FT	0040.500.31	
•	500	4,80	4,00	30		Elumatec, Haffner, Martin	96	FT	0040.500.38	
•	500	4,00	3,40	30	2/10,5/70	Elu, Haffner, Oliver, Pfeiffer, Rapid	120	FT	0040.500.29	
♪	500	4,00	3,40	30	2/10,5/70	Elu, Haffner, Oliver, Pfeiffer, Rapid	120	FT	0140.500.29	
	500	4,20	3,60	80	6/6,5/100	Schirmer, Wegoma	84	FT	0040.500.80	
♪	500	4,40	3,40	80	6/9/100	Schirmer, Wegoma	120	FT	0140.500.81	
•	500	4,40	3,80	25,4		Oliver	120	FT	0040.500.26	
TOP •	500	4,40	3,80	30	2/10,5/70	Rapid BSK, DGL500	120	FT	0040.500.30	
•	500	4,80	4,20	30		Elumatec, Haffner, Martin	120	FT	0040.500.32	
•	500	4,00	3,40	30		Elumatec, Haffner, Martin	144	FT	0040.501.30	
•	520	4,40	3,80	30		Elumatec	120	FT	0040.520.30	
•	550	5,00	4,00	30		Elumatec	72	FT	0040.550.32	
•	550	5,00	4,00	30		Elumatec	96	FT	0040.550.31	
•	550	4,60	3,60	30		Elumatec	110	FT	0040.550.29	
•	550	4,00	3,40	30	2/10,5/70	Rapid	132	FT	0040.550.30	
NEW •	600	4,50	3,80	40	2/11/63	Pressta Eisele	60	F, AW	0040.600.41	
NEW •	600	4,00	3,50	40	2/11/63	Pressta Eisele	96	F, AW	0040.600.42	
•	600	4,80	4,00	40	2/11/63	Pressta Eisele	96	FT	0040.600.40	
•	600	4,60	4,00	30		Grau, Stegmaier	138	FT	0040.600.30	
NEW •	620	5,50	4,50	40	2/13/114 2/13/140	Schelling	60	FT	0040.620.41	
•	650	5,20	4,00	30		Mayer	60	FT	0040.650.31	
•	650	5,20	4,00	30		Mayer	72	FT	0040.650.32	
•	650	5,00	4,00	30		Emmegi	144	FT	0040.650.30	

Design for anodized or lacquered aluminum and further custom-made special tools on request

0040 Circular saw blade for aluminium

Industrial panel sizing

Application:	Industrial panel sizing in profiles, plates, blocks, rods
Material:	Aluminium, copper alloy (e.g. brass)
Machine:	CNC machining center, panel sizing machines
Design:	Rigid design; low number of teeth for high cutting heights and feed rates; improved HW quality; smooth and vibration-free cuts due to optimized saw body design ensures excellent cutting quality; from Ø 300 mm also with riveted and noise-reducing expansion slots • = noise-reduced
Tooth:	Triple-chip flat tooth, positive with guiding notch for splitting of chips (FT, HK), HW
Feed:	MEC

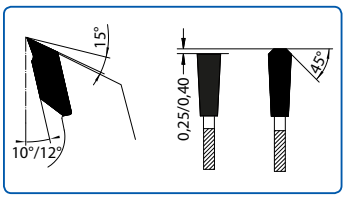

	D mm	B mm	b mm	d mm	NL mm	Machine	Z	Tooth shape	Order No.	Price [PG 01]
•	350	4,20	3,40	30	NLK	Mayer, Schelling, Anthon, Homag	54	FT, HK	0040.350.36	
•	350	4,20	3,40	30	NLK		72	FT, HK	0040.350.37	
•	450	4,80	3,80	30			72	FT, HK	0040.450.35	
•	450	3,80	3,00	30			36	FT, HK	0040.450.34	
•	460	4,40	3,50	30	2/13/94		36	FT, HK	0040.460.30	
•	500	5,00	4,00	30			72	FT, HK	0040.500.34	
•	550	5,00	4,00	30			72	FT, HK	0040.550.33	
•	620	5,20	4,20	40			36	FT, HK	0040.620.40	
•	650	5,20	4,00	30			60	FT, HK	0040.650.33	
•	650	5,20	4,00	30			72	FT, HK	0040.650.34	
•	670	6,50	5,00	40	2/13/114 2/14/140		32	FT, HK	0040.670.40	

Various designs are also available as diamond tipped version on request

0040 Circular saw blade for aluminium
Thin-cut

Application:	Cross cuts in profiles
Material:	Aluminium, copper alloy (e.g. brass), plastic material
Machine:	Bench saws, sizing saws, CNC machining center, automatic clipping saws, suitable also for cordlers portable saws
Design:	Extremely thin cutting kerf for optimum material yield; improved HW quality; smooth and vibration-free cuts due to optimized saw body design ensures excellent cutting quality; from Ø 300 mm also with riveted and noise-reducing expansion slots • = noise-reduced
Tooth:	Triple-chip flat tooth, positive (FT), HW
Feed:	MAN / MEC

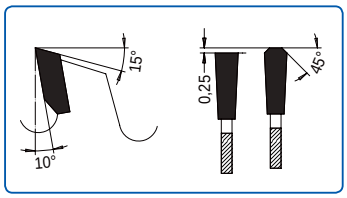

	D mm	B mm	b mm	d mm	NL mm	Machine	Z	Tooth shape	Order No.	Price [PG 01]
	180	2,20	1,60	20	2/6/32	Haffner, Makita	60	FT	0040.180.20	
	200	2,20	1,60	20	2/6/32	Emmegi, Pressta Eisele	80	FT	0040.200.21	
	250	2,40	1,80	30	NLK	Elu, Haffner, Makita, Rapid, Ulmia	100	FT	0040.250.31	
•	300	2,20	1,60	30	NLK	DeWalt, Fezer, Rapid, Schleicher, Ulmia	120	FT	0040.300.34	
•	350	2,70	2,00	30	NLK	DeWalt, Haffner, Pfeiffer, Rapid, Ulmia	120	FT	0040.350.28	
•	400	3,00	2,40	30	NLK	DeWalt, Haffner, Rapid, Ulmia, Wegoma	130	FT	0040.400.29	
•	500	3,30	2,80	30	2/10,5/70	Elumatec, Haffner, Martin, Rapid	140	FT	0040.500.40	

0042 Circular saw blade for aluminium

Cross cut in thin-walled profile and solid block

Application:	Sizing and cross cut, for machines with minimum lubrication, in profiled and solid materials
Material:	Non-ferrous metal, plastics
Machine:	CNC machining center, clipping saw, portable circular saw, mitre and double mitre saw, radial arm saw, bench and sizing saw, cross-cut saw
Design:	Rigid design, noise reduced, improved HW quality; smooth and vibration-free cuts due to optimized saw body design ensures excellent cutting quality; from Ø 300 mm also with riveted and noise-reducing • = noise-reduced ♪ = Soundstar: Optimised, noise reduced design
Tooth:	Triple-chip flat tooth, negative hook angle (FT, neg.), HW
Feed:	MAN / MEC

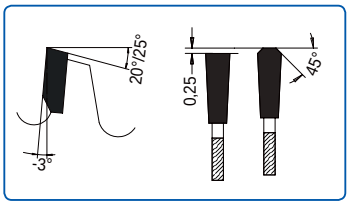

	D mm	B mm	b mm	d mm	NL mm	Machine	Z	Tooth shape	Order No.	Price [PG 01]
	180	2,80	2,20	30	2/7/42	Bosch, Elu, Festo, Reich	42	FT, neg.	0042.180.31	
	180	3,30	2,80	20	2/6/32	Haffner, Makita	42	FT, neg.	0042.180.21	
	200	3,30	2,80	30	2/7/42	Eisele, Eumenia, Häfele, Urban	48	FT, neg.	0042.200.31	
	200	3,30	2,80	30	2/7/42	Eisele,Eumenia,Häfele, Ulmia,Urban	60	FT, neg.	0042.200.30	
	210	2,80	2,20	30	2/7/42	Hitachi, Makita, Metabo	60	FT, neg.	0042.210.30	
	216	3,00	2,40	30	2/7/42	DeWalt, Elu, Hitachi, Reich	60	FT, neg.	0042.216.30	
	216	3,00	2,40	30	2/7/42	DeWalt, Elu, Hitachi, Reich	80	FT, neg.	0042.216.31	
	220	3,30	2,80	30	NLK	Elu, Festo, Haffner, Reich	72	FT, neg.	0042.220.30	
	250	3,30	2,80	30	NLK	Baier, Elu, Fezer, Haffner, Kaltenbach, Makita, Trennjäger, Ulmia	54	FT, neg.	0042.250.31	
	250	3,30	2,80	30	NLK	Baier, Elu, Fezer, Haffner, Kalten-bach, Makita,Trennjäger Ulmia	60	FT, neg.	0042.250.29	
	250	2,80	2,20	30	NLK	Baier, Elu, Fezer, Haffner, Kaltenbach, Makita, Trennjäger, Ulmia	80	FT, neg.	0042.250.34	
TOP	250	3,30	2,80	30	NLK	Baier, Elu, Fezer, Haffner, Kaltenbach, Makita, Trennjäger, Ulmia	80	FT, neg.	0042.250.30	
♪	250	3,30	2,80	30	NLK	Baier, Elu, Fezer, Haffner, Kaltenbach, Makita, Trennjäger, Ulmia	80	FT, neg.	0142.250.30	
	250	3,30	2,80	32	NLK	Elu TGS71, Fetzer KG25, Perticl	80	FT, neg.	0042.250.32	
	250	3,30	2,80	30	NLK	Baier, Elu, Fezer, Haffner, Kaltenbach, Makita, Trennjäger, Ulmia	96	FT, neg.	0042.250.28	
	275	3,30	2,80	40	2/9/55 4/12/64	Eisele, Graule	88	FT, neg.	0042.275.39	

0042 Circular saw blade for aluminium

Cross cut in thin-walled profile and solid block

	D mm	B mm	b mm	d mm	NL mm	Machine	Z	Tooth shape	Order No.	Price [PG 01]
	280	3,30	2,80	30	NLK	AEG, Elumatec, Mafell	80	FT, neg.	0042.280.30	
•	300	3,60	3,00	30	NLK	DeWalt, Fezer KG30, Rapid, Schleicher, Ulmia 1711/12/25	60	FT, neg.	0042.300.31	
•	300	3,60	3,00	30	NLK	DeWalt, Fezer KG30, Rapid, Schleicher, Ulmia 1711/12/25	72	FT, neg.	0042.300.29	
•	300	2,80	2,20	30	NLK	DeWalt, Fezer KG 30, Rapid, Schleicher, Ulmia 1711/12/25	96	FT, neg.	0042.300.34	
TOP •	300	3,50	3,00	30	NLK	DeWalt, Fezer KG 30, Rapid, Schleicher, Ulmia 1711/12/25	96	FT, neg.	0042.300.30	
♪	300	3,50	3,00	30	NLK	DeWalt, Fezer KG 30, Rapid, Schleicher, Ulmia 1711/12/25	96	FT, neg.	0142.300.30	
•	300	3,50	3,00	32	NLK	Fezer, Rapid, Trennjäger	96	FT, neg.	0042.300.32	
•	300	3,50	3,00	40	2/9/55 4/12/64	Elu, Eisele, Graule	96	FT, neg.	0042.300.40	
•	305	2,80	2,20	30	NLK	Elu, Hitachi, Weidmann	80	FT, neg.	0042.305.30	
•	330	3,50	3,00	30	NLK	Elu, Eisele, Graule	84	FT, neg.	0042.330.31	
•	330	3,50	3,00	30	NLK	Haffner	102	FT, neg.	0042.330.30	
•	330	3,50	3,00	32	NLK	Elu DG-79	102	FT, neg.	0042.330.32	
•	350	2,80	2,20	30	NLK	Berg&Schmid, DeWalt, Haffner, Pfeiffer, Ulmia 1711/12/25, Wegoma	108	FT, neg.	0042.350.34	
•	350	3,50	3,00	30	NLK	Berg&Schmid, DeWalt, Haffner, Pfeiffer, Ulmia 1711/12/25, Wegoma	108	FT, neg.	0042.350.30	
♪	350	3,50	3,00	30	NLK	Berg&Schmid, DeWalt, Haffner, Pfeiffer, Ulmia 1711/12/25, Wegoma	108	FT, neg.	0142.350.30	
•	350	3,50	3,00	32	4/10/63	Eisele LMS350 M/S	108	FT, neg.	0042.350.32	
TOP •	350	3,60	3,00	30	NLK	Berg&Schmid, DeWalt, Haffner, Pfeiffer, Ulmia 1711/12/25, Wegoma	72	FT, neg.	0042.350.31	
•	350	3,60	3,00	30	NLK	Berg&Schmid, DeWalt, Haffner, Pfeiffer, Ulmia 1711/12/25, Wegoma	84	FT, neg.	0042.350.29	
•	350	3,50	3,00	40	2/9/55 4/12/64	Eisele LMS II-PV/VA-L	108	FT, neg.	0042.350.40	
•	370	3,60	3,00	30	NLK	Eckert, Elu	60	FT, neg.	0042.370.30	
•	370	3,60	3,00	30	NLK	Eckert, Elu	80	FT, neg.	0042.370.31	
•	380	3,50	3,00	32	NLK	Elumatec, Elu DG79 / MGS 72/30	110	FT, neg.	0042.380.32	
•	400	3,80	3,20	50	4/15/80	Kaltenbach	66	FT, neg.	0042.400.50	
•	400	3,60	3,00	30	NLK	DeWalt, Haffner, Rapid, Ulmia, Wegoma	90	FT, neg.	0042.400.31	
•	400	3,60	3,00	50	4/15/80	Kaltenbach TL400	90	FT, neg.	0042.400.51	
•	400	4,40	3,80	40	2/15/80 2/12/64	Eisele LMS II, D, PV	90	FT, neg.	0042.400.40	
•	400	3,60	3,00	30	NLK	DeWalt, Haffner, Rapid, Ulmia, Wegoma	120	FT, neg.	0042.400.32	
•	420	3,80	3,20	30	2/10,5/70	Elu, Haffner, Rapid, Ulmia, Wegoma	90	FT, neg.	0042.420.31	
•	420	4,40	3,80	30	2/10,5/70	Elu, Haffner, Rapid, Ulmia, Wegoma	90	FT, neg.	0042.420.33	
•	420	3,80	3,20	30	2/10,5/70	Elu DG 102/104 / MGS 105	108	FT, neg.	0042.420.30	
•	450	4,80	4,00	30		DeWalt, Haffner, Rapid	96	FT, neg.	0042.450.42	
•	500	4,40	3,80	30	2/10,5/60	Haffner, Pfeiffer	120	FT, neg.	0042.500.30	
•	520	4,40	3,80	30		Graule ZS 200N / ZS200NF	120	FT, neg.	0042.520.30	
•	550	4,40	3,80	30		Elu, Rapid	96	FT, neg.	0042.550.31	
•	550	4,40	3,80	30		Elu, Rapid	128	FT, neg.	0042.550.30	
•	600	4,60	4,00	30		Stürtz	140	FT, neg.	0042.600.30	

Design for anodized or lacquered aluminium and further custom-made special tools on request

0042 Circular saw blade for aluminium
Thin-cut

Application:	Cross cut for machines with minimum lubrication in thin-walled profiles and tubes
Material:	Non-ferrous metal, plastic
Machine:	Double mitre saw, CNC machining center, automatic clipping saw, suitable also for battery-driven saws
Design:	Extremely thin cutting kerf for optimum material yield; improved HW quality; smooth and vibration-free cuts due to optimized saw body design ensures excellent cutting quality; from Ø 300 mm also with riveted and noise-reducing expansion slots • = noise-reduced
Tooth:	Triple-chip flat tooth, negative hook angle (FT, neg.), HW
Feed:	MAN / MEC

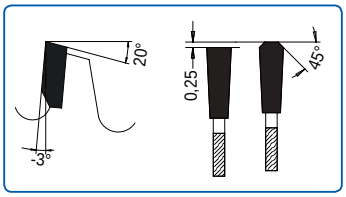

	D mm	B mm	b mm	d mm	NL mm	Machine	Z	Tooth shape	Order No.	Price [PG 01]
	160	2,20	1,60	20	2/6/32	AEG, Fein, Festo, Haffner, Hitachi, Kress, Mafell, Makita, Reich	60	FT, neg.	0042.160.20	
	216	2,20	1,60	30	2/7/42	DeWalt, Elu, Hitachi, Reich	80	FT, neg.	0042.216.29	
	250	2,20	1,80	30	NLK	Baier, Elu, Fezer, Haffner, Kaltenbach, Makita, Trennjäger, Ulmia	100	FT, neg.	0042.250.27	
•	300	2,20	1,80	30	NLK	DeWalt, Fezer KG30, Rapid, Schleicher, Ulmia 1711/12/25	120	FT, neg.	0042.300.28	
•	350	2,70	2,00	30	NLK	Berg&Schmid, DeWalt, Haffner, Pfeiffer, Ulmia 1711/12/25, Wegoma	120	FT, neg.	0042.350.28	
•	400	3,00	2,40	30	NLK	DeWalt, Haffner, Rapid, Ulmia, Wegoma	130	FT, neg.	0042.400.30	
•	500	3,30	2,80	30	2/10,5/70	Elumatec, Haffner, Martin, Rapid	140	FT, neg.	0042.500.31	

0020 Circular saw blade for aluminium
Bombastic

Your benefits at a glance:

BOMBASTIC -
Synonym for excellent cuts

The synonym for excellent cuts – forget about subsequent reworking of edges. Designed for cutting non-ferrous metal the Bombastic circular saw blade generates substantial cost savings due to several times‘ service life. Reworking becomes dispensable particularly wherever aluminium profiles are being cut.

Almost burr-free cutting edges
- Optimal cuts on your finished product due to specifically ground tooth geometries
- Higher cutting quality

Extremely long service life
- Several times‘ service life compared to standard saw blades
- Low vibration

Hardly any re-machining necessary
- No subsequent de-burring
- Shorter cycle time

Application:	Cross cut in profiles, finish processing
Material:	Aluminium alloys, anodised, profiles of up to 10 mm wall thickness, profiles of non-ferrous metal
Machine:	Mechanic cross-cut saws, flush-mounted cross-cut saws, machining centre with sawing aggregate, revolving transfer machine, continuous casting plants
Design:	Typ DA; • = riveted - thus very quiet and vibration-free cutting results
Tooth:	Triple-chip flat tooth (FT), HW
Feed:	MEC

	D mm	B mm	b mm	d mm	Type	Z	Tooth shape	LZ	Order No.	Price [PG 03]
•	250	2,80	2,00	30	DA	80	FT	○	0020.250.30	
•	300	3,00	2,20	30	DA	96	FT	○	0020.300.30	
•	350	3,60	3,00	30	DA	96	FT	○	0020.350.30	
•	400	3,80	3,00	30	DA	96	FT	○	0020.400.30	
•	450	4,00	3,40	30	DA	102	FT	○	0020.450.30	
•	500	4,20	3,40	30	DA	96	FT	○	0020.500.31	
•	500	4,00	3,40	30	DA	120	FT	○	0020.500.30	
•	550	4,20	3,40	30	DA	132	FT	○	0020.550.30	
•	600	4,80	4,00	30	DA	138	FT	○	0020.600.30	

When ordering, please specify pin holes, flange diameter and number of revolutions
All dimensions available from Ø 160 to 800 mm on the basis of your machine specification

0043 Special circular saw blade and milling tool

Notching, sawing, hogging, notching profiles

Application:	Notching of non-ferrous metal and plastic material, discs can also be used as Vario hogger set
Material:	Plastic profile, aluminium profile, wooden material
Machine:	Special machines, window production units
Design:	Rigid design with big carbide overhang
Tooth:	Flat tooth with alternate chamfer (FS), HW
Feed:	MEC

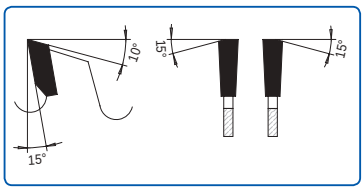

D mm	B mm	b mm	d mm	Machine	Z	Tooth shape	Order No.	Price [PG 01]
200	8,00	6,00	40	Graule	32	FS	0043.200.41	
250	8,00	6,00	30		40	FS	0043.250.30	
250	8,00	6,00	40	Rapid	40	FS	0043.250.40	
300	8,00	6,00	40	Eisele	16	FS	0043.300.41	

0043 Special circular saw blade
Removing glass ledges

Application:	Removing glass ledges, used as trimming set
Material:	Plastic profile, aluminium profile, wooden material
Machine:	Special machines, glass ledge saws
Tooth:	Triple-chip flat tooth, negative (FT, neg.), Alternate top bevel tooth (W), Tooth one side acute (E), HW
Feed:	MEC

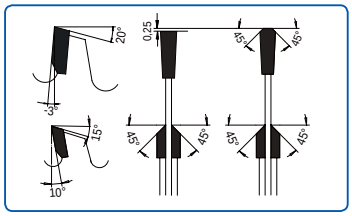

Fig.: Triple-chip flat tooth (FT neg.)
Tooth one side acute (E)

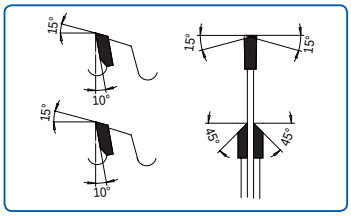

Fig.: Alternate top bevel tooth (W)
Tooth one side acute (E)

Chamfering saws

D mm	B mm	b mm	d mm	Machine	Z	Tooth shape	Rhs/ Lhs	Order No.	Price [PG 01]
92	3,00	2,50	30	Rotox	24	E	lhs	0043.092.30	
92	3,00	2,50	30	Rotox	24	E	rhs	0043.092.31	
95	2,00	1,80	20	Haffner	20	E	lhs	0043.095.20	
95	2,00	1,80	20	Haffner	20	E	rhs	0043.095.21	
98	3,00	2,50	32	Elumatec	36	E	lhs	0043.098.32	
98	3,00	2,50	32	Elumatec	36	E	rhs	0043.098.33	
103	2,10	1,60	32	Wegoma	24	E	lhs	0043.103.32	
103	2,10	1,60	32	Wegoma	24	E	rhs	0043.103.33	

Clipping saws

D mm	B mm	b mm	d mm	NL mm	Machine	Z	Tooth shape	Order No.	Price [PG 01]
175	2,10	1,60	20		Haffner GL179	68	W	0043.175.20	
200	2,20	1,80	20		Striffler	60	W	0043.200.20	
200	2,10	1,60	32	NLK	Wegoma	80	W	0043.200.32	
200	2,20	1,80	30	NLK	Rotox	100	FT, neg.	0043.200.30	
250	2,10	1,60	30	NLK	BJM, Rapid	120	FT, neg.	0043.250.31	

0836 Solid steel circular saw blade
for cuts in steel profiles

Application:	Cuts in steel profiles and solid steel blocks
Material:	For steel, non-ferrous metal as well as solid steel, bars, profiles and tubes
Machine:	Metal circular sawing machine
Design:	Quality DM 05
Tooth:	Form HZ and form BW, both sides hollow ground, HS
Feed:	MAN / MEC

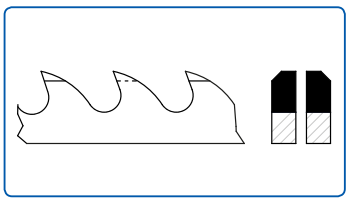

Fig.: Tooth shape BW

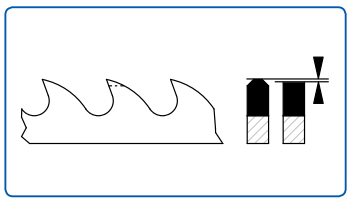

Fig.: Tooth shape C

D mm	B mm	d mm	NL mm	T	Z	Tooth shape	Order No.	Price [PG 02]
225	2,00	32	2/8/45 + 2/9/50 + 2/11/63	6	120	C	0836.225.120	
225	2,00	40	2/8/55 + 4/12/64	6	120	C	0836.225.121	
225	2,00	32	2/8/45 + 2/9/50 + 2/11/63	4	180	BW	0836.225.180	
225	2,00	40	2/8/55 + 2/12/64	4	180	BW	0836.225.181	
225	2,00	32	2/8/45 + 2/9/50 + 2/11/63	3	220	BW	0836.225.220	
225	2,00	40	2/8/55 + 4/12/64	3	220	BW	0836.225.221	
250	2,00	32	2/8/45 + 2/9/50 + 2/11/63	8	100	C	0836.250.100	
250	2,00	40	2/8/55 + 4/12/64	8	100	C	0836.250.101	
250	2,00	32	2/8/45 + 2/9/50 + 2/11/63	6	128	C	0836.250.128	
250	2,00	40	2/8/55 + 4/12/64	6	128	C	0836.250.129	
250	2,00	40	2/8/55 + 4/12/64	4	200	BW	0836.250.201	
250	2,00	32	2/8/45 + 2/9/50 + 2/11/63	4	200	BW	0836.250.200	
275	2,50	32	2/8/45 + 2/9/50 + 2/11/63	8	110	C	0836.275.112	
275	2,50	40	2/8/55 + 4/12/64	8	110	C	0836.275.113	
275	2,50	32	2/8/45 + 2/9/50 + 2/11/63	6	140	C	0836.275.142	
275	2,50	40	2/8/55 + 4/12/64	6	140	C	0836.275.143	
275	2,50	32	2/8/45 + 2/9/50 + 2/11/63	5	180	C	0836.275.182	
275	2,50	40	2/8/55 + 4/12/64	5	180	C	0836.275.183	
275	2,50	32	2/8/45 + 2/9/50 + 2/11/63	4	220	BW	0836.275.220	
275	2,50	40	2/8/55 + 4/12/64	4	220	BW	0836.275.223	
275	2,50	32	2/8/45 + 2/9/50 + 2/11/63	3	280	BW	0836.275.292	
275	2,50	40	2/8/55 + 4/12/64	3	280	BW	0836.275.283	
300	2,50	32	2/8/45 + 2/9/50 + 2/11/63	8	120	C	0836.300.122	
300	2,50	40	2/8/55 + 4/12/64	8	120	C	0836.300.123	

0836 Solid steel circular saw blade
for cuts in steel profiles

D mm	B mm	d mm	NL mm	T	Z	Tooth shape	Order No.	Price [PG 02]
300	2,50	32	2/8/45 + 2/9/50 + 2/11/63	6	160	C	0836.300.162	
300	2,50	40	2/8/55 + 4/12/64	6	160	C	0836.300.163	
300	2,50	32	2/8/45 + 2/9/50 + 2/11/63	4	220	BW	0836.300.222	
300	2,50	40	2/8/55 + 4/12/64	4	220	BW	0836.300.223	
315	2,50	32	2/8/45 + 2/9/50 + 2/11/63	8	120	C	0836.315.120	
315	3,00	40	2/8/55 + 4/12/64	8	120	C	0836.315.123	
315	2,50	32	2/8/45 + 2/9/50 + 2/11/63	6	160	C	0836.315.160	
315	3,00	40	2/8/55 + 4/12/64	6	160	C	0836.315.163	
315	2,50	32	2/8/45 + 2/9/50 + 2/11/63	4	240	BW	0836.315.240	
315	3,00	40	2/8/55 + 4/12/64	4	240	BW	0836.315.243	
350	3,00	40	2/8/55 + 4/12/64	10	110	C	0836.350.114	
350	3,00	50	4/15/80 + 4/14/85	9	120	C	0836.350.125	
350	2,50	32	2/8/45 + 2/9/50 + 2/11/63	8	140	C	0836.350.140	
350	3,00	40	2/8/55 + 4/12/64	8	140	C	0836.350.144	
350	3,00	50	4/15/80 + 4/14/85	7	160	C	0836.350.165	
350	3,00	40	2/8/55 + 4/12/64	6	180	C	0836.350.184	
350	3,00	50	4/15/80 + 4/14/85	5	220	C	0836.350.225	
370	3,00	50	4/15/80 + 4/14/85	9	120	C	0836.370.122	
370	3,00	50	4/15/80 + 4/14/85	7	160	C	0836.370.162	
370	3,00	50	4/15/80 + 4/14/85	5	220	C	0836.370.222	
400	3,50	40	2/8/55 + 4/12/64	12	96	C	0836.400.102	
400	3,50	40	2/8/55 + 4/12/64	10	120	C	0836.400.122	
400	3,50	40	2/8/55 + 4/12/64	8	160	C	0836.400.162	
400	3,50	40	2/8/55 + 4/12/64	6	200	C	0836.400.202	

Design for anodized or lacquered aluminium and further custom-made special tools on request

0047 Circular saw blade for portable saw

Longitudinal and cross cut

Application:	Longitudinal cut with flat tooth (F), cross cut with alternate top bevel tooth (W)
Material:	Solid wood, panel material, plastic
Machine:	Portable saw, table saw, cross-cut saw
Tooth:	Flat tooth (F), alternate top bevel tooth (W), HW
Feed:	MAN

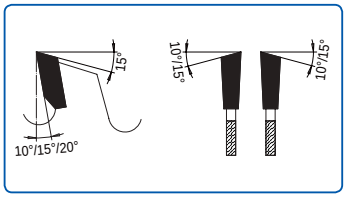

Fig.: Alternate top bevel tooth (W)

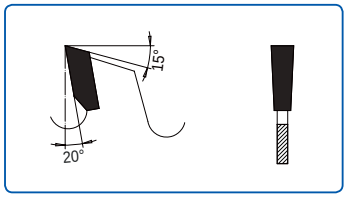

Fig.: Flat tooth (F)

D mm	B mm	b mm	d mm	NL mm	Z	Tooth shape	Order No.	Price [PG 01]
100	2,60	1,60	12		12	F	0047.12.100	
100	2,60	1,60	12		30	W	0047.30.100	
105	2,60	1,60	20		30	W	0047.30.105	
105	2,60	1,60	22		30	W	0047.30.106	
120	2,60	1,60	20		12	F	0047.12.120	
120	2,60	1,60	20		30	W	0047.30.120	
125	2,60	1,60	12,75		12	F	0047.12.125	
125	2,60	1,60	20		30	W	0047.30.127	
132	2,60	1,60	20		12	F	0047.12.133	
132	2,60	1,60	20		30	W	0047.30.134	
150	2,60	1,60	13		12	F	0047.12.150	
150	2,60	1,60	20		12	F	0047.12.149	
150	2,60	1,60	20		30	W	0047.30.149	
150	2,60	1,60	30		30	W	0047.30.151	
160	2,60	1,60	20		12	F	0047.12.157	
160	2,60	1,60	30		12	F	0047.12.159	
160	2,60	1,60	20	2/6/32	24	W	0047.24.159	
160	2,60	1,60	20		30	W	0047.30.157	
160	2,60	1,60	20	2/6/32	48	W	0047.48.159	
165	2,60	1,60	16		12	F	0047.12.165	
☐ 165	2,60	1,60	16		30	W	0047.30.165	
165	2,60	1,60	20		30	W	0047.30.166	
170	2,60	1,60	30		12	F	0047.12.169	
170	2,60	1,60	30	2/7/42	24	W	0047.24.171	
170	2,60	1,60	30		30	W	0047.30.169	
170	2,60	1,60	30	2/7/42	48	W	0047.48.171	
180	2,80	1,80	30		12	F	0047.12.182	
180	2,80	1,80	16	1/6/33	24	W	0047.24.180	

0047 Circular saw blade for portable saw

Longitudinal and cross cut

D mm	B mm	b mm	d mm	NL mm	Z	Tooth shape	Order No.	Price [PG 01]
180	2,80	1,80	20	2/6/32	24	W	0047.24.181	
180	2,80	1,80	30		24	W	0047.24.182	
180	2,80	1,80	20		30	W	0047.30.182	
180	2,80	1,80	30		30	W	0047.30.183	
180	2,80	1,80	16	1/6/33	54	W	0047.54.180	
180	2,80	1,80	20	2/6/32	54	W	0047.54.181	
190	2,80	1,80	30		16	F	0047.16.192	
190	2,80	1,80	20	2/6/32	24	W	0047.24.191	
190	2,80	1,80	30	2/7/42	24	W	0047.24.192	
190	2,80	1,80	30		30	W	0047.30.192	
190	2,80	1,80	20	2/6/33	48	W	0047.48.190	
190	2,80	1,80	30	2/7/42	48	W	0047.48.191	
200	2,80	1,80	30		16	F	0047.16.203	
200	2,80	1,80	30		24	W	0047.24.202	
200	2,80	1,80	30		30	W	0047.30.204	
200	2,80	1,80	16	1/6/33	48	W	0047.48.200	
210	2,80	1,80	30		16	F	0047.16.209	
210	2,80	1,80	30	2/7/42	24	W	0047.24.211	
210	2,80	1,80	30		30	W	0047.30.209	
210	2,80	1,80	30	2/7/42	48	W	0047.48.211	
215	3,00	2,00	30		30	W	0047.30.215	
215	3,00	2,00	30	2/7/42	48	W	0047.48.215	
220	3,00	2,00	30		24	W	0047.24.221	
220	3,00	2,00	30		30	W	0047.30.221	
225	3,00	2,00	30	2/7/42	24	W	0047.24.225	
225	3,00	2,00	30		30	W	0047.30.225	
225	3,00	2,00	30	2/7/42	48	W	0047.48.225	
225	3,00	2,00	30	2/7/42	60	W	0047.60.225	
☐ 225	3,00	2,00	30	2/7/42	80	W	0047.80.225	
230	3,00	2,00	30		24	W	0047.24.231	
230	3,00	2,00	16		30	W	0047.30.230	
230	3,00	2,00	16		40	W	0047.40.230	
235	3,00	2,00	30		24	W	0047.24.236	
235	3,00	2,00	30		30	W	0047.30.236	
240	3,00	2,00	30		24	W	0047.24.240	
240	3,00	2,00	30		30	W	0047.30.240	
240	3,00	2,00	30	2/7/42	56	W	0047.56.240	
250	3,20	2,20	30	2/7/42	24	W, SDB	0047.24.251	
250	3,20	2,20	30		30	W	0047.30.252	
250	3,20	2,20	20		40	W	0047.40.250	
260	3,00	2,00	30		24	W	0047.24.260	
270	3,00	2,00	30		48	W	0047.48.270	

0047 Circular saw blade for portable saw

Longitudinal and cross cut

D mm	B mm	b mm	d mm	NL mm	Z	Tooth shape	Order No.	Price [PG 01]
280	3,20	2,20	30		28	W	0047.28.280	
280	3,20	2,20	30	2/7/42	48	W	0047.48.280	
280	3,20	2,20	30		60	W	0047.60.280	
300	3,20	2,20	30		30	W	0047.30.300	
315	3,20	2,20	30		28	W	0047.28.315	
315	3,20	2,20	30	2/7/42	48	W	0047.48.315	
315	3,20	2,20	30	2/7/42	60	W	0047.60.315	
320	3,50	2,40	30	2/7/42	24	F	0047.24.320	
370	3,60	2,40	30		26	F, SDB	0047.26.370	
410	3,60	2,40	30		28	F, SDB	0047.28.410	

2360 Grooving circular saw blade

Grooving with mechanic feed

Application:	Longitudinal cut; for grooving or as set of tools for rebating, chamfering, grooving and profiling
Material:	Solid wood, panel material, plastic
Machine:	Double-end profiler, moulding machine, CNC machining center
Design:	Big gullets, to be used as tool set
Tooth:	Flat tooth (F), HW
Feed:	MEC

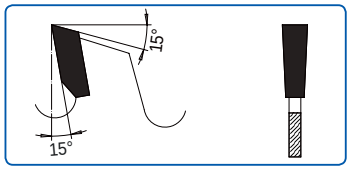

D mm	B mm	b mm	d mm	Z	Tooth shape	Order No.	Price [PG 01]
125	1,50	1,00	30	12	F	2360.125.01	
125	2,00	1,40	30	12	F	2360.125.05	
125	2,50	1,40	30	12	F	2360.125.09	
125	3,00	2,00	30	12	F	2360.125.11	
125	3,50	2,40	30	12	F	2360.125.13	
125	4,00	3,00	30	12	F	2360.125.15	
125	4,50	3,00	30	12	F	2360.125.17	
125	5,00	3,50	30	12	F	2360.125.19	
125	6,00	4,00	30	12	F	2360.125.21	
140	1,50	1,00	30	12	F	2360.140.01	
140	1,80	1,20	30	12	F	2360.140.03	
140	2,00	1,40	30	12	F	2360.140.05	
140	2,50	1,40	30	12	F	2360.140.09	
140	3,00	2,00	30	12	F	2360.140.11	
140	3,50	2,40	30	12	F	2360.140.13	
140	4,00	3,00	30	12	F	2360.140.15	
140	5,00	3,50	30	12	F	2360.140.17	
140	6,00	4,00	30	12	F	2360.140.19	
140	7,00	6,00	30	12	F	2360.140.21	
140	8,00	6,00	30	12	F	2360.140.23	
140	10,00	7,00	30	12	F	2360.140.27	
150	4,00	3,00	30	12	F	2360.150.15	
150	5,00	3,50	30	12	F	2360.150.17	
150	6,00	4,00	30	12	F	2360.150.19	
150	3,00	2,00	30	18	F	2360.150.01	
150	4,00	3,00	30	18	F	2360.150.03	
150	5,00	3,50	30	18	F	2360.150.05	
150	6,00	4,00	30	18	F	2360.150.07	
150	8,00	6,00	30	18	F	2360.150.09	
180	4,00	3,00	30	12	F	2360.180.01	
180	5,00	3,50	30	12	F	2360.180.03	
180	6,00	4,00	30	12	F	2360.180.05	
180	8,00	6,00	30	12	F	2360.180.07	
180	10,00	7,00	30	12	F	2360.180.09	

2361 Grooving circular saw blade

Grooving with manual feed

Application:	Longitudinal cut. For grooving or as set of tools for rebating, chamfering, grooving and profiling
Material:	Solid wood, panel material, plastic
Machine:	Bench router
Design:	Up to Ø 100 extended tooth back from Ø 125 chip-thickness limited (SDB)
Tooth:	Flat tooth (F), HW
Feed:	MAN

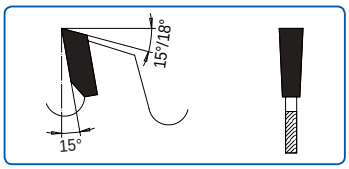

D mm	B mm	b mm	d mm	Z	Tooth shape	Order No.	Price [PG 01]
100	2,00	1,40	20	6	F	2361.100.20	
100	3,00	2,00	20	6	F	2361.100.21	
100	4,00	3,00	20	6	F	2361.100.22	
100	5,00	3,50	20	6	F	2361.100.23	
100	6,00	4,00	20	6	F	2361.100.24	
100	8,00	6,00	20	6	F	2361.100.26	
100	10,00	7,00	20	6	F	2361.100.27	
125	1,50	1,00	30	12	F, SDB	2361.125.01	
125	1,80	1,20	30	12	F, SDB	2361.125.03	
125	2,00	1,40	30	12	F, SDB	2361.125.05	
125	2,50	1,40	30	12	F, SDB	2361.125.09	
125	3,00	2,00	30	12	F, SDB	2361.125.11	
125	3,50	2,40	30	12	F, SDB	2361.125.13	
125	4,00	3,00	30	12	F, SDB	2361.125.15	
125	4,50	3,00	30	12	F, SDB	2361.125.17	
125	5,00	3,50	30	12	F, SDB	2361.125.19	
125	6,00	4,00	30	12	F, SDB	2361.125.21	
140	2,00	1,40	30	12	F, SDB	2361.140.05	
140	2,50	1,40	30	12	F, SDB	2361.140.09	
140	3,00	2,00	30	12	F, SDB	2361.140.11	
140	3,50	2,40	30	12	F, SDB	2361.140.13	
140	4,00	3,00	30	12	F, SDB	2361.140.15	
140	4,50	3,00	30	12	F, SDB	2361.140.16	
140	5,00	3,50	30	12	F, SDB	2361.140.17	
140	6,00	4,00	30	12	F, SDB	2361.140.19	
140	8,00	6,00	30	12	F, SDB	2361.140.23	
140	10,00	7,00	30	12	F, SDB	2361.140.27	
180	4,00	3,00	30	12	F, SDB	2361.180.01	
180	5,00	3,50	30	12	F, SDB	2361.180.03	
180	6,00	4,00	30	12	F, SDB	2361.180.05	
180	8,00	6,00	30	12	F, SDB	2361.180.07	
180	10,00	7,00	30	12	F, SDB	2361.180.09	

2359 Grooving circular saw blade

Groving longitudinal and cross cut

Application:	Grooving and slitting, longitudinal and cross cut
Material:	Solid wood
Machine:	Bench router
Design:	Chip-thickness limited (SDB) due to shape of saw body
Tooth:	Flat tooth (F), HW
Feed:	MAN

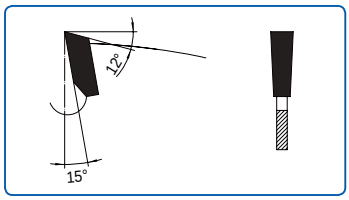

D mm	B mm	b mm	d mm	Z	Tooth shape	Order No.	Price [PG 01]
200	4,00	2,50	30	4	F, SDB	2359.200.30	
250	4,00	3,00	30	4	F, SDB	2359.250.30	
250	6,00	4,50	30	4	F, SDB	2359.250.31	
300	5,00	4,00	30	4	F, SDB	2359.300.30	
300	6,00	4,50	30	4	F, SDB	2359.300.31	

2351 | 2353 Grooving cutter for lamello

Application:	For lamello grooves
Material:	Wood and panel material with and without coating
Machine:	Portable machines
Tooth:	Clustered teeth, HW
Feed:	MAN

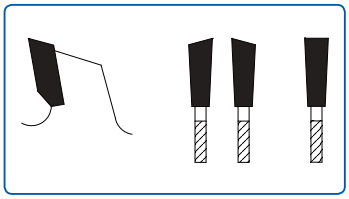

With hub (spacer 55 / 22 x 0,5)

	D mm	B mm	b mm	d mm	Z	Tooth shape	Order No.	Price [PG 01]
TOP	100	3,97	3,00	22	12	WF	2351.100.22	

Grooving cutter for Elu-Doublo DS140 [2353]

without hub

	D mm	B mm	b mm	d mm	Z	Tooth shape	Order No.	Price [PG 01]
TOP	100	3,97	3,00	22	12	WF	2353.100.22	

2370 I 2373 I Adjustable grooving cutter HW
with spacers = 0,1 mm increments

Application:	For grooving along and across the grain
Material:	Wood and panel material with and without coating
Machine:	Spindle moulders and double end tenoners
Design:	HW-tipped with wipers, flat, spurs on top and bottom, top and side cutting
Tooth:	Flat tooth (F), flat tooth with axial angle (F, AW), HW
Feed:	MAN

D mm	B mm	d mm	Z	Tooth shape	n (max) min-1	t (max)	LZ	Order No.	Price [PG 02]
120	1,8-3,4	30	6 + 6	F + F	6.000-12.000	12		10001957	
120	2,2-4,0	30	6 + 6	F + F	6.000-12.000	15		10001958	
140	2,2-4,0	30	6 + 6	F + F	6.000-12.000	15		10001960	
140	2,5-4,8	30	4 / V4	F + F, AW	5.500-9.500	15	◊	10023859	
150	4,0-7,5	30	4 / V4	F + F, AW	5.100-9.000	35		10009619	
150	7,5-14,0	30	4 / V4	F + F, AW	5.100-9.000	35		10009622	

0590 Reducing ring
for saw blades

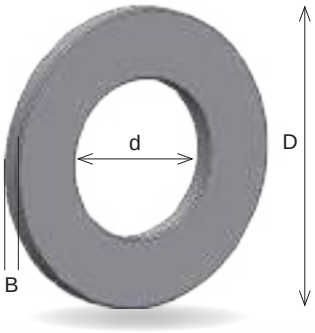

Application: Reduction of the saw blade bore, reducing ring has to be wide enough to avoid the ring from moving into the flange gap, when using a reducing ring the saw blade still has to be tensioned sufficiently by the flange

Design: Serrated

D mm	B mm	b mm	Order No.	Price [PG 01]
16	1,60	12,7	0591.016.07	
16	1,60	13	0591.016.13	
20	1,60	12,7	0591.020.07	
20	1,60	15,875	0591.020.87	
20	1,60	16	0591.020.16	
20	1,60	18	0591.020.18	
22	1,60	16	0591.022.16	
22	2,00	16	0592.022.16	
22	1,60	20	0591.022.20	
22	2,00	20	0592.022.20	
25	2,00	15,875	0591.025.87	
25	2,00	16	0591.025.16	
25	2,00	20	0591.025.20	
25	2,00	22,225	0591.025.22	
30	2,00	15	0591.030.15	
30	2,20	15	0592.030.15	
30	2,00	15,875	0591.030.87	
30	2,20	15,875	0592.030.87	
30	2,00	16	0591.030.16	
30	2,20	16	0592.030.16	
30	2,00	18	0591.030.18	
30	2,20	18	0592.030.18	
NEU 30	1,60	20	0590.030.20	
30	2,00	20	0591.030.20	
30	2,20	20	0592.030.20	
30	2,00	22	0591.030.22	
30	2,40	22	0592.030.22	
30	2,00	25	0591.030.25	
30	2,20	25	0592.030.25	
30	2,00	25,4	0591.030.54	
30	2,20	25,4	0592.030.54	
30	2,80	25,4	0593.030.54	
30	2,20	28	0590.305.28	

0590 Reducing ring
for saw blades

D mm	B mm	b mm	Order No.	Price [PG 01]
32	2,00	20	0591.032.20	
32	2,20	20	0592.032.20	
32	2,00	22	0591.032.22	
32	2,00	25	0591.032.25	
32	2,20	25	0592.032.25	
32	2,00	30	0591.032.30	
32	2,20	30	0592.032.30	
35	2,00	20	0591.035.20	
35	2,20	20	0592.035.20	
35	2,00	25	0591.035.25	
35	2,20	25	0592.035.25	
35	1,60	30	0591.035.30	
35	2,00	30	0592.035.30	
35	2,20	30	0593.035.30	
35	2,80	30	0594.035.30	
40	1,60	30	0591.040.30	
40	2,00	30	0592.040.30	
40	1,60	32	0591.040.32	
40	2,00	32	0592.040.32	
40	1,60	35	0591.040.35	
40	2,00	35	0592.040.35	
50	2,80	30	0591.050.30	
60	2,80	30	0591.060.30	
70	2,80	30	0591.070.30	
75	2,80	30	0591.075.30	
80	2,80	30	0591.080.30	

8888 AKE Multi - Clean

Cleansing agent - quick resin removing

It is very important to regularly remove resin from our tools to obtain a long service life.

This cleansing agent contributes significantly to an optimal service life and cutting quality. With a cleaned tool you also avoid an increased power consumption of the machine and thus higher electricity costs.

Our Multi-Clean tool cleaner is a very efficient universal cleansing agent for soiled tools. It removes resin and severe soiling from circular saw blades, cutters and drills, cleaning everything quickly and residue-free.

Article	Order No.	Price [PG 03]
1 Liter spray	8888.000.04	
5 Liter canister	8888.000.05	
10 Liter canister	8888.000.06	

Attention: It is absolutely worth one's while to regularly remove resin from the tools. The service life of resin-soiled tools is much shorter than usual, the cutting quality is lower and energy costs are higher.

Circular saw blades according to diameter

D mm	B mm	b mm	d mm	NL mm	Z	Tooth shape	Catalogue Page	Order No.	PG	Price
80	2,0-2,4	1,80	20		12	W con.	167	7826.080.12.20-B24		
80	2,4-2,8	1,80	20		12	W con.	167	7826.080.12.20-B28		
80	3,10	2,20	20		12	W	71	0026.080.21	01	
80	3,38	2,20	20		16	W	71	0026.080.22	01	
80	2,8-3,6	4,00	20		8 + 8	W	67	0026.080.27	01	
80	2,8-3,6	4,00	20		10 + 10	F	159-161	7026.080.20	03	
80	2,8-3,6	4,00	20		10 + 10	W	68-69	0026.080.20	01	
92	3,00	2,50	30		24	E	107	0043.092.30	01	
92	3,00	2,50	30		24	E	107	0043.092.31	01	
95	2,00	1,80	20		20	E	107	0043.095.20	01	
95	2,00	1,80	20		20	E	107	0043.095.21	01	
98	3,00	2,50	32		36	E	107	0043.098.32	01	
98	3,00	2,50	32		36	E	107	0043.098.33	01	
100 / 92	5,60	2,20	32		20	E	94-95	0039.100.49	01	
100 / 92	5,60	2,20	32		20	E	94-95	0039.100.43	01	
100	10,00	7,00	20		6	F	114	2361.100.27	01	
100	2,00	1,40	20		6	F	114	2361.100.20	01	
100	3,00	2,00	20		6	F	114	2361.100.21	01	
100	4,00	3,00	20		6	F	114	2361.100.22	01	
100	5,00	3,50	20		6	F	114	2361.100.23	01	
100	6,00	4,00	20		6	F	114	2361.100.24	01	
100	8,00	6,00	20		6	F	114	2361.100.26	01	
100	2,60	1,60	12		12	F	110-112	0047.12.100	01	
100	2,40	1,60	22	2/4/30	12	W	94-95	0039.100.23	01	
100	3,97	3,00	22	with hub	12	WF	116	2351.100.22	01	
100	3,97	3,00	22	without hub	12	WF	116	2353.100.22	01	
100	2,60	1,60	30		12	F	96	0039.102.30	01	
100	2,0-2,4	1,80	20		16	W con.	167	7826.100.16.20-B24		
100	2,4-2,8	1,80	20		16	W con.	167	7826.100.16.20-B28		
100	2,0-2,4	1,80	22		16	W con.	167	7826.100.16.22-B24		
100	2,4-2,8	1,80	22		16	W con.	167	7826.100.16.22-B28		
100	3,0-4,0	2,60	20		20	F con.	69-70	0026.100.21	01	
100	3,20	2,20	32		20	E	94-95	0039.100.21	01	
100	3,20	2,20	32		20	E	94-95	0039.100.22	01	
100	3,20	2,20	32	4/5,5/52	20	E	94-95	0039.100.01	01	
100	3,20	2,20	32	4/5,5/52	20	E	94-95	0039.100.02	01	
100	2,60	1,60	12		30	W	110-112	0047.30.100	01	
100	2,60	1,60	30		30	W	96	0039.102.31	01	
100	4,00	2,80	30		30	WWF	78	0515.100.30	01	
100	5,00	4,00	30		30	WWF	78	0515.100.31	01	
100	2,60	1,60	32		30	W	94-95	0039.100.32	01	
100	3,60	2,40	32		30	E	94-95	0039.100.03	01	
100	3,60	2,40	32		30	E	94-95	0039.100.04	01	
100	2,8-3,6	4,00	20		12 + 12	W	68-69	0026.100.20	01	
100	2,8-3,6	4,00	22		12 + 12	W	68-69	0026.100.01	01	
103	2,10	1,60	32		24	E	107	0043.103.32	01	
103	2,10	1,60	32		24	E	107	0043.103.33	01	
105	2,60	1,60	20		30	W	110-112	0047.30.105	01	
105	2,60	1,60	22		30	W	110-112	0047.30.106	01	
110 / 102	5,80	4,80	40		20	E	94-95	0039.110.18	01	
110 / 102	5,80	4,80	40		20	E	94-95	0039.110.19	01	
110	3,60	2,50	22		20	W	94-95	0039.110.22	01	
110	3,60	2,40	32		20	W	94-95	0039.110.42	01	

Circular saw blades according to diameter

D mm	B mm	b mm	d mm	NL mm	Z	Tooth shape	Catalogue Page	Order No.	PG	Price
110	3,20	2,50	40	cs pin holes top counter clockwise 4/5,5/52 m.A.	20	E	94-95	0039.110.43	01	
110	3,20	2,50	40	cs pin holes top clockwise 4/5,5/52 m. A.	20	E	94-95	0039.110.44	01	
110	2,8-3,6	4,00	20		12 + 12	W	68-69	0026.110.20	01	
120	2,60	1,60	20	3/4,5/35 m.A.	12	F	96	0039.122.31	01	
120	2,60	1,60	20		12	F	110-112	0047.12.120	01	
120	2,60	1,60	30		12	F	96	0039.122.30	01	
120	2,0-2,4	1,80	20		20	W con.	167	7826.120.20.20-B24		
120	2,4-2,8	1,80	20		20	W con.	167	7826.120.20.20-B28		
120	2,0-2,4	1,80	22		20	W con.	167	7826.120.20.22-B24		
120	2,4-2,8	1,80	22		20	W con.	167	7826.120.20.22-B28		
120	3,20	2,20	32		20	W	94-95	0039.120.32	01	
120	3,1-4,3	2,80	20		24	F con.	69-70	0026.120.20	01	
120	3,60	2,80	40	cs pin holes i. W. 8/6/52 m. A.	24	W	94-95	0039.120.40	01	
120	2,60	1,60	20	3/4,5/35 m.A.	30	W	96	0039.122.33	01	
120	2,60	1,60	20		30	W	110-112	0047.30.120	01	
120	2,60	1,60	30		30	W	96	0039.122.32	01	
120	4,00	2,80	20		35	WWF	78	0515.120.20	01	
120	5,00	4,00	20		35	WWF	78	0515.120.21	01	
120	3,60	2,80	40	cs pin holes i. W. 8/6/52	36	W	94-95	0039.120.41	01	
120	1,8-3,4		30		6 + 6	F + F	117	10001957	02	
120	2,2-4,0		30		6 + 6	F + F	117	10001958	02	
120	2,8-3,6	4,00	20		12 + 12	F	159-161	7026.120.20	03	
120	2,8-3,6	4,00	20		12 + 12	W	68-69	0026.120.03	01	
120	2,8-3,8	4,00	22		12 + 12	F	159-161	7026.120.02	03	
120	2,8-3,8	4,00	22	4/5,2/39 m. A. 4/5,2/55 m. A. 2/3,8/42 o. A.	12 + 12	W	68-69	0026.120.22	01	
120	2,8-3,8	4,00	22		12 + 12	W	68-69	0026.120.02	01	
120	2,8-3,8	4,40	22	2/4,5/42 2/4,8/39 m. A.	12 + 12	W	68-69	0026.120.06	01	
120	2,8-3,6	4,40	50		12 + 12	F	159-161	7026.120.50	03	
120	2,8-3,8	4,40	50	4/6/62 m. A.	12 + 12	W	68-69	0026.120.04	01	
120	2,8-3,8	6,00	50	4/4,5/60 + 4/8/60	12 + 12	W	68-69	0026.120.50	01	
125	2,60	1,60	12,75		12	F	110-112	0047.12.125	01	
125	1,50	1,00	30		12	F	113	2360.125.01	01	
125	1,50	1,00	30		12	F, SDB	114	2361.125.01	01	
125	1,80	1,20	30		12	F, SDB	114	2361.125.03	01	
125	2,00	1,40	30		12	F	113	2360.125.05	01	
125	2,00	1,40	30		12	F, SDB	114	2361.125.05	01	
125	2,50	1,40	30		12	F	113	2360.125.09	01	
125	2,50	1,40	30		12	F, SDB	114	2361.125.09	01	
125	2,60	1,60	30		12	F	96	0039.127.30	01	
125	2,60	1,60	30	4/4,5/48 m.A.	12	F	96	0039.127.31	01	
125	3,00	2,00	30		12	F	113	2360.125.11	01	
125	3,00	2,00	30		12	F, SDB	114	2361.125.11	01	
125	3,50	2,40	30		12	F	113	2360.125.13	01	
125	3,50	2,40	30		12	F, SDB	114	2361.125.13	01	

Circular saw blades according to diameter

D mm	B mm	b mm	d mm	NL mm	Z	Tooth shape	Catalogue Page	Order No.	PG	Price
125	4,00	3,00	30		12	F	113	2360.125.15	01	
125	4,00	3,00	30		12	F, SDB	114	2361.125.15	01	
125	4,50	3,00	30		12	F	113	2360.125.17	01	
125	4,50	3,00	30		12	F, SDB	114	2361.125.17	01	
125	5,00	3,50	30		12	F	113	2360.125.19	01	
125	5,00	3,50	30		12	F, SDB	114	2361.125.19	01	
125	6,00	4,00	30		12	F	113	2360.125.21	01	
125	6,00	4,00	30		12	F, SDB	114	2361.125.21	01	
125	2,0-2,4	1,80	20		20	W con.	167	7826.125.20.20-B24		
125	2,4-2,8	1,80	20		20	W con.	167	7826.125.20.20-B28		
125	2,0-2,4	1,80	22		20	W con.	167	7826.125.20.22-B24		
125	2,4-2,8	1,80	22		20	W con.	167	7826.125.20.22-B28		
125	3,1-3,9	2,20	20		24	F con.	159-161	7026.125.25	03	
125	3,1-4,3	2,80	20		24	F con.	69-70	0026.125.03	01	
125	4,4-5,2	3,40	20		24	F con.	159-161	7026.125.21	03	
125	4,4-5,6	3,40	20		24	F con.	69-70	0026.125.02	01	
125	3,1-4,3	2,80	22		24	F con.	69-70	0026.125.01	01	
125	3,35	2,40	22		24	W 10°	71	0026.125.23	01	
125	4,4-5,2	3,20	45		24	F con.	159-161	7026.125.45	03	
125	4,4-5,6	3,40	45		24	F con.	69-70	0026.125.45	01	
125	2,60	1,60	20		30	W	110-112	0047.30.127	01	
125	2,60	1,60	30		30	W	96	0039.127.32	01	
125	2,60	1,60	30	4/4,5/48 m.A.	30	W	96	0039.127.33	01	
125	4,00	2,80	30	cs pin holes i.W. 8/5,5/48	35	WWF	78	0515.125.30	01	
125	5,00	4,00	30	cs pin holes i.W. 8/5,5/48	35	WWF	78	0515.125.31	01	
125	2,40	1,60	30	cs pin holes i. W. 8/6/48	36	W	94-95	0039.125.30	01	
125	3,20	2,00	30	cs pin holes 4/5,3/48 clockwise 4/5,3/48 counter cw	36	W	94-95	0039.127.34	01	
125	2,8-3,6	4,00	20		12 + 12	F	159-161	7026.125.23	03	
125	2,8-3,6	4,00	20		12 + 12	W	68-69	0026.125.20	01	
125	2,8-3,6	4,00	22		12 + 12	W	68-69	0026.125.22	01	
125	2,8-3,8	6,00	50	4/4,5/60 + 4/8/60	12 + 12	W	68-69	0026.125.50	01	
125	4,0-5,0	6,00	50	4/4,5/60 + 4/8/60	12 + 12	W	68-69	0026.125.51	01	
127	3,8-5,0	2,80	45		24	F con.	69-70	0026.127.03	01	
127	4,0-5,2	3,40	45		24	F con.	69-70	0026.127.04	01	
127	4,4-5,2	3,40	45		24	W con.	159-161	7026.127.01	03	
127	4,4-5,6	3,40	45		24	F con.	69-70	0026.127.02	01	
132	2,60	1,60	20		12	F	110-112	0047.12.133	01	
132	2,60	1,60	20		30	W	110-112	0047.30.134	01	
140	1,50	1,00	30		12	F	113	2360.140.01	01	
140	1,80	1,20	30		12	F	113	2360.140.03	01	
140	10,00	7,00	30		12	F	113	2360.140.27	01	
140	10,00	7,00	30		12	F, SDB	114	2361.140.27	01	
140	2,00	1,40	30		12	F	113	2360.140.05	01	
140	2,00	1,40	30		12	F, SDB	114	2361.140.05	01	
140	2,50	1,40	30		12	F	113	2360.140.09	01	
140	2,50	1,40	30		12	F, SDB	114	2361.140.09	01	
140	3,00	2,00	30		12	F	113	2360.140.11	01	
140	3,00	2,00	30		12	F, SDB	114	2361.140.11	01	
140	3,50	2,40	30		12	F	113	2360.140.13	01	

Circular saw blades according to diameter

D mm	B mm	b mm	d mm	NL mm	Z	Tooth shape	Catalogue Page	Order No.	PG	Price
140	3,50	2,40	30		12	F, SDB	114	2361.140.13	01	
140	4,00	3,00	30		12	F	113	2360.140.15	01	
140	4,00	3,00	30		12	F, SDB	114	2361.140.15	01	
140	4,50	3,00	30		12	F, SDB	114	2361.140.16	01	
140	5,00	3,50	30		12	F	113	2360.140.17	01	
140	5,00	3,50	30		12	F, SDB	114	2361.140.17	01	
140	6,00	4,00	30		12	F	113	2360.140.19	01	
140	6,00	4,00	30		12	F, SDB	114	2361.140.19	01	
140	7,00	6,00	30		12	F	113	2360.140.21	01	
140	8,00	6,00	30		12	F	113	2360.140.23	01	
140	8,00	6,00	30		12	F, SDB	114	2361.140.23	01	
140	4,4-5,6	3,40	45		28	W con.	71	0026.140.45	01	
140	3,20	2,20	16		36	W	94-95	0039.140.16	01	
140	2,5-4,8		30		4 / 4	F + F, AW	117	10023859	02	
140	2,2-4,0		30		6 + 6	F + F	117	10001960	02	
140	2,8-3,8	4,00	36	3/9/55 + 3/4,2/55 + 2/6,2/51	12 + 12	W	68-69	0026.140.36	01	
150	2,60	1,60	13		12	F	110-112	0047.12.150	01	
150	2,60	1,60	20		12	F	110-112	0047.12.149	01	
150	2,60	1,60	30		12	F	96	0039.152.30	01	
150	4,00	3,00	30		12	F	113	2360.150.15	01	
150	5,00	3,50	30		12	F	113	2360.150.17	01	
150	6,00	4,00	30		12	F	113	2360.150.19	01	
150	3,00	2,00	30		18	F	113	2360.150.01	01	
150	4,00	3,00	30		18	F	113	2360.150.03	01	
150	5,00	3,50	30		18	F	113	2360.150.05	01	
150	6,00	4,00	30		18	F	113	2360.150.07	01	
150	8,00	6,00	30		18	F	113	2360.150.09	01	
150	3,20	2,20	30		24	W	75-76, 96	0014.150.30	01	
150	3,20	2,20	30	4/6,5/48 m.A.	24	W	97	0039.152.32	01	
150	3,0-4,0	2,60	30		28	F con.	69-70	0026.150.30	01	
150	3,3-4,1	2,20	30		28	F con.	69-70	0026.150.32	01	
150	3,7-4,5	2,80	30		28	F con.	159-161	7026.150.30	03	
150	3,7-4,5	2,80	30		28	F con.	69-70	0026.151.30	01	
150	4,4-5,2	3,20	30		28	F con.	159-161	7026.150.13	03	
150	4,4-5,6	3,40	30		28	F con.	69-70	0026.150.06	01	
150	4,4-5,6	3,40	30		28	W con.	66	0026.150.31	01	
150	3,3-4,1	2,20	45		28	F con.	159-161	7026.150.45	03	
150	3,3-4,1	2,20	45		28	F con.	69-70	0026.150.46	01	
150	4,4-5,2	3,40	45		28	F con.	159-161	7026.150.46	03	
150	4,4-5,6	3,40	45		28	F con.	69-70	0026.150.45	01	
150	2,60	1,60	20		30	W	110-112	0047.30.149	01	
150	2,60	1,60	30		30	W	110-112	0047.30.151	01	
150	3,20	2,20	30		30	F	89	0030.150.30	01	
150	3,50	2,40	20		36	E	94-95	0039.150.08	01	
150	3,50	2,40	20		36	E	94-95	0039.150.09	01	
150	3,20	2,20	30		36	W	75-76, 96	0014.150.33	01	
150	3,20	2,20	30	4/6,5/48 m.A.	36	W	97	0039.152.33	01	
150	3,50	2,40	22		48	W	94-95	0039.150.41	01	
150	3,20	2,20	30		48	F	89	0030.150.31	01	
150	3,20	2,20	30		48	W	77, 96	0015.150.30	01	
150	3,20	2,20	30	4/6,5/48 m.A.	48	W	97	0039.152.34	01	
150	2,20	1,60	30		60	W	80	0017.150.30	01	

Circular saw blades according to diameter

D mm	B mm	b mm	d mm	NL mm	Z	Tooth shape	Catalogue Page	Order No.	PG	Price
150	4,0-7,5		30		4 / 4	F + F, AW	117	10009619	02	
150	7,5-14,0		30		4 / 4	F + F, AW	117	10009622	02	
160	2,60	1,60	20		12	F	110-112	0047.12.157	01	
160	2,60	1,60	30	4/5,5/52 m.A.	12	F	96	0039.162.30	01	
160	2,60	1,60	30		12	F	110-112	0047.12.159	01	
160	2,60	1,60	20	2/6/32	24	W	110-112	0047.24.159	01	
160	4,4-5,6	3,20	30		28	F con.	69-70	0026.160.33	01	
160	4,4-5,2	3,20	45	3/11/70	28	F con.	159-161	7026.160.45	03	
160	4,4-5,6	3,20	45	3/11/70	28	F con.	69-70	0026.160.45	01	
160	2,60	1,60	20		30	W	110-112	0047.30.157	01	
160	2,60	1,60	30	4/5,5/52 m.A.	30	W	96	0039.162.31	01	
160	3,1-4,0	2,60	20		32	F con.	69-70	0026.160.21	01	
160	2,80	2,00	20		34	HDF	85	0025.160.20	01	
160	3,50	2,50	22	4/5,5/52	36	W	94-95	0039.161.22	01	
160	4,4-5,2	3,20	55	3/7/66	36	F con.	159-161	7026.160.55	03	
160	4,4-5,6	3,40	55	3/7/66	36	F con.	69-70	0026.160.55	01	
160	1,50	2,40	16	1/6/33	48	W	80	0017.161.16	01	
160	2,60	1,60	20	2/6/32	48	W	110-112	0047.48.159	01	
160	3,20	2,20	20		48	W	94-95	0039.160.20	01	
160	3,20	2,20	20	2/5/32	48	W	94-95	0039.160.21	01	
160	3,20	2,20	22		48	E	94-95	0039.160.22	01	
160	3,20	2,20	22		48	E	94-95	0039.160.23	01	
160	3,20	2,20	22		48	W	94-95	0039.161.23	01	
160	2,60	1,60	30	4/5,5/52 m.A.	48	W	96	0039.162.32	01	
160	2,20	1,60	20	2/6/32	60	FT	104	0042.160.20	01	
160	2,20	1,60	16	1/6/33	64	W	80	0017.160.16	01	
165	2,60	1,60	16		12	F	110-112	0047.12.165	01	
165	2,60	1,60	16		30	W	110-112	0047.30.165	01	
165	2,60	1,60	20		30	W	110-112	0047.30.166	01	
170	2,60	1,60	30		12	F	110-112	0047.12.169	01	
170	2,60	1,60	30	2/7/42	24	W	110-112	0047.24.171	01	
170	2,60	1,60	30		30	W	110-112	0047.30.169	01	
170	2,60	1,60	30	2/7/42	48	W	110-112	0047.48.171	01	
170	2,80	2,20	30	2/7/42	48	FT	98-99	0040.170.30	01	
170	3,50	2,20	30	4/5,5/52	48	E	94-95	0039.170.33	01	
175	4,6-5,8	3,50	45		28	F con.	69-70	0026.175.45	01	
175	2,10	1,60	20		68	W	107	0043.175.20	01	
180	10,00	7,00	30		12	F	113	2360.180.09	01	
180	10,00	7,00	30		12	F, SDB	114	2361.180.09	01	
180	2,80	1,80	30	4/5,5/52 m.A.	12	F	96	0039.182.31	01	
180	2,80	1,80	30	4/6,5/48 m.A.	12	F	97	0039.182.30	01	
180	2,80	1,80	30		12	F	110-112	0047.12.182	01	
180	4,00	3,00	30		12	F	113	2360.180.01	01	
180	4,00	3,00	30		12	F, SDB	114	2361.180.01	01	
180	5,00	3,50	30		12	F	113	2360.180.03	01	
180	5,00	3,50	30		12	F, SDB	114	2361.180.03	01	
180	6,00	4,00	30		12	F	113	2360.180.05	01	
180	6,00	4,00	30		12	F, SDB	114	2361.180.05	01	
180	8,00	6,00	30		12	F	113	2360.180.07	01	

Circular saw blades according to diameter

D mm	B mm	b mm	d mm	NL mm	Z	Tooth shape	Catalogue Page	Order No.	PG	Price
180	8,00	6,00	30		12	F, SDB	114	2361.180.07	01	
180	2,80	1,80	16	1/6/33	24	W	110-112	0047.24.180	01	
180	2,80	1,80	20	2/6/32	24	W	110-112	0047.24.181	01	
180	2,80	1,80	30		24	W	110-112	0047.24.182	01	
180	4,4-5,6	3,40	20		28	F con.	69-70	0026.180.20	01	
180	3,3-4,1	2,20	30	NLK	28	F con.	159-161	7026.180.30	03	
180	3,3-4,1	2,20	30	NLK	28	F con.	69-70	0026.180.32	01	
180	3,7-4,5	2,80	30	NLK	28	F con.	159-161	7026.180.36	03	
180	3,7-4,5	2,80	30	NLK	28	F con.	69-70	0026.180.36	01	
180	4,4-5,2	3,20	30	NLK	28	F con.	159-161	7026.180.17	03	
180	4,4-5,6	3,40	30	NLK	28	F con.	69-70	0026.180.30	01	
180	2,80	1,80	20		30	W	110-112	0047.30.182	01	
180	2,40	1,80	30	NLK	30	W	74	0013.180.30	01	
180	2,80	1,80	30		30	W	110-112	0047.30.183	01	
180	3,20	2,20	30		30	F	89	0030.180.34	01	
180	3,20	2,20	30	NLK	30	W	75-76, 96	0014.180.30	01	
180	3,20	2,20	30	4/5,5/52 m.A.	30	W	96	0039.182.34	01	
180	3,20	2,20	30	4/6,5/48 m.A.	30	W	97	0039.182.33	01	
180	3,20	2,20	50	3/22/80 + 3/6/80	30	F	89	0030.180.51	01	
180	4,4-5,2	3,20	20		32	W con.	159-161	7026.180.21	03	
180	4,4-5,2	3,20	45		32	F con.	159-161	7026.180.44	03	
180	4,8-5,6	3,50	45		32	F con.	159-161	7026.180.46	03	
180	2,80	1,80	16	1/6/33	36	HDF	85	0025.180.16	01	
180	5,8-6,8	4,00	20		36	F con.	69-70	0026.182.20	01	
180	6,8-7,8	5,00	20		36	F con.	69-70	0026.180.34	01	
180	3,20	2,20	30		36	F	155	7015.180.31	03	
180	3,20	2,20	30		36	W	155	7015.180.30	03	
180	4,55	3,50	30		36	W 5°	71	0026.180.31	01	
180	3,7-4,5	2,80	45		36	F con.	159-161	7026.181.45	03	
180	3,7-4,5	2,80	45		36	F con.	69-70	0026.180.47	01	
180	4,4-5,6	3,20	45		36	F con.	69-70	0026.180.45	01	
180	4,8-5,8	3,50	45		36	F con.	69-70	0026.181.45	01	
180	4,8-5,8	3,50	45		36	W con.	66	0026.180.46	01	
180	3,2-4,3	2,80	16	2/6/33	42	F con.	69-70	0026.180.16	01	
180	3,30	2,80	20	2/6/32	42	FT	102-103	0042.180.21	01	
180	2,80	2,20	30	2/7/42	42	FT	102-103	0042.180.31	01	
180	3,20	2,20	30		42	F	89	0030.180.33	01	
180	3,20	2,20	30	NLK	42	W	75-76, 96	0014.180.33	01	
180	3,20	2,20	30	4/5,5/52 m.A.	42	W	96	0039.182.36	01	
180	3,20	2,20	30	4/6,5/48 m.A.	42	W	97	0039.182.35	01	
180	3,20	2,20	50	3/22/80 + 3/6/80	42	F	89	0030.180.50	01	
180	4,4-5,2	3,20	50	3/13/80	42	F con.	159-161	7026.180.50	03	
180	4,4-5,6	3,40	50	3/13/80	42	F con.	69-70	0026.180.50	01	
180	3,20	2,20	65		42	F	89	0030.180.08	01	
180	3,20	2,20	65		42	F	89	0030.180.09	01	
180	1,50	2,40	16	1/6/33	54	W	80	0017.181.16	01	
180	2,80	1,80	16	1/6/33	54	W	110-112	0047.54.180	01	
180	2,80	1,80	20	2/6/32	54	W	110-112	0047.54.181	01	

Circular saw blades according to diameter

D mm	B mm	b mm	d mm	NL mm	Z	Tooth shape	Catalogue Page	Order No.	PG	Price
180	1,50	2,40	30	2/7/42 + 2/10/60	54	W	80	0017.181.30	01	
180	2,40	1,80	30	NLK	54	W	79	0016.180.30	01	
180	3,20	2,20	30		54	F	155	7015.180.36	03	
180	3,20	2,20	30		54	W	155	7015.180.35	03	
180	3,20	2,20	30		54	F	89	0030.180.31	01	
180	3,20	2,20	30	NLK	54	W	77, 96	0015.180.30	01	
180	3,20	2,20	30	cs pin holes top clockwise 4/5,5/52	54	W	94-95	0039.180.30	01	
180	3,20	2,20	30	4/6,5/48 m.A.	54	W	97	0039.182.32	01	
180	3,20	2,20	50	3/22/80 3/6/80	54	F	89	0030.180.52	01	
180	3,20	2,20	65		54	F	89	0030.180.06	01	
180	3,20	2,20	65		54	F	89	0030.180.07	01	
180	2,20	1,60	20	2/6/32	60	FT	101	0040.180.20	01	
180	3,00	2,20	30	NLK	60	WWF	78	0515.180.30	01	
180	2,20	1,60	16	1/6/33	72	W	80	0017.180.16	01	
180	2,8-3,8	4,40	50	4/6/62 m.A.	18 + 18	W	68-69	0026.180.51	01	
180	4,4-5,6	3,20	45		20 + 20	W	68-69	0026.180.13	01	
190	2,80	1,80	30		16	F	110-112	0047.16.192	01	
190	2,80	1,80	20	2/6/32	24	W	110-112	0047.24.191	01	
190	2,80	1,80	30	2/7/42	24	W	110-112	0047.24.192	01	
190	2,80	1,80	30		30	W	110-112	0047.30.192	01	
190	3,7-4,5	2,80	50	2/7/80	32	F con.	159-161	7026.190.50	03	
190	3,7-4,5	2,80	50	2/7/80	32	F con.	69-70	0026.190.51	01	
190	4,0-5,2	2,80	50	2/7/80	32	W con.	71	0026.190.50	01	
190	4,4-5,2	3,20	50	2/7/80	32	F con.	159-161	7026.190.52	03	
190	4,4-5,6	3,20	50	2/7/80	36	F con.	69-70	0026.190.52	01	
190	2,80	1,80	20	2/6/33	48	W	110-112	0047.48.190	01	
190	2,80	1,80	30	2/7/42	48	W	110-112	0047.48.191	01	
200	4,00	2,50	30		4	F, SDB	115	2359.200.30	01	
200	2,80	1,80	30	4/5,5/52 m.A.	16	F	96	0039.202.32	01	
200	2,80	1,80	30	4/6,5/48 m.A.	16	F	97	0039.202.31	01	
200	2,80	1,80	30		16	F	110-112	0047.16.203	01	
200	4,4-5,2	3,40	20	2/11/66	24	F con.	159-161	7026.200.24	03	
200	4,4-5,6	3,40	20	2/11/66	24	F con.	69-70	0026.200.22	01	
200	2,80	1,80	30		24	W	110-112	0047.24.202	01	
200	4,00	3,00	30		24	F	19	0005.200.31	01	
200	1,20	0,80	50		28	F	19	0005.200.50	01	
200	1,50	1,10 / 2,20	60		28	F	19	0005.200.62	01	
200	2,80	1,80	30		30	W	110-112	0047.30.204	01	
200	4,4-5,2	3,40	20	2/11/66	32	F con.	159-161	7026.200.20	03	
200	5,0-5,8	3,50	20	2/11/66	32	F con.	159-161	7026.200.22	03	
200	5,5-6,4	4,00	20	2/11/66	32	F con.	159-161	7026.200.23	03	
200	6,2-7,0	4,20	20	2/11/66	32	F con.	159-161	7026.200.25	03	
200	7,0-7,8	5,00	20	2/9/60	32	F con.	159-161	7026.200.27	03	
200	8,00	6,00	40		32	F	106	0043.200.41	01	
200	4,4-5,2	3,50	45		32	F con.	159-161	7026.200.51	03	
200	4,8-5,6	3,50	45		32	F con.	159-161	7026.200.46	03	
200	5,8-6,6	4,50	45		32	F con.	159-161	7026.200.47	03	
200	6,2-7,0	4,20	45		32	F con.	159-161	7026.200.48	03	

Circular saw blades according to diameter

D mm	B mm	b mm	d mm	NL mm	Z	Tooth shape	Catalogue Page	Order No.	PG	Price
200	3,7-4,5	2,80	65	2/9/100 2/9/110	32	F con.	159-161	7026.201.65	03	
200	3,7-4,5	2,80	65	2/9/100 + 2/9/110	32	F con.	69-70	0026.201.65	01	
200	4,1-4,9	3,00	65	2/9/100 2/9/110	32	F con.	159-161	7026.201.66	03	
200	4,4-5,2	3,50	65	2/9/100 2/9/110	32	F con.	159-161	7026.200.67	03	
200	4,8-5,6	3,50	65	2/9/100 2/9/110	32	F con.	159-161	7026.200.68	03	
200	4,4-5,2	3,20	80	2/14/110	32	F con.	159-161	7026.200.83	03	
200	2,00	1,40	30	NLK	34	W	74	0013.200.31	01	
200	3,7-4,5	2,80	20	2/11/66	36	F con.	159-161	7026.200.21	03	
200	3,7-4,5	2,80	20	2/11/66	36	F con.	69-70	0026.200.25	01	
200	4,4-5,6	3,40	20	2/11/66	36	F con.	69-70	0026.200.34	01	
200	4,4-5,6	3,40	20	2/11/66	36	W con.	66	0026.200.26	01	
200	5,0-5,8	3,50	20	2/11/66	36	F con.	69-70	0026.200.20	01	
200	5,5-6,6	3,80	20	2/11/66	36	F con.	69-70	0026.200.23	01	
200	6,2-7,2	4,20	20	2/11/66	36	F con.	69-70	0026.200.24	01	
200	7,0-8,0	5,00	20	2/9/60	36	F con.	69-70	0026.200.27	01	
200	2,40	1,80	30	NLK	36	W	74	0013.200.30	01	
200	2,80	1,80	30	NLK	36	HDF	85	0025.200.30	01	
200	3,20	2,20	30		36	F	89	0030.200.30	01	
200	3,20	2,20	30	NLK	36	W	75-76, 96	0014.200.30	01	
200	3,20	2,20	30	4/5,5/52 m.A.	36	W	96	0039.202.35	01	
200	3,20	2,20	30	4/6,5/48 m.A.	36	W	97	0039.202.34	01	
200	3,7-4,5	2,80	30	2/8,5/60	36	F con.	159-161	7026.201.30	03	
200	3,7-4,5	2,80	30	2/8,5/60	36	F con.	69-70	0026.201.30	01	
200	4,4-5,2	3,50	30	2/8,5/60	36	F con.	159-161	7026.200.26	03	
200	4,4-5,6	3,20	30	2/8,5/60	36	F con.	69-70	0026.200.30	01	
200	4,8-5,8	3,50	30	2/8,5/60	36	F con.	69-70	0026.200.32	01	
200	3,3-4,1	2,20	45		36	F con.	159-161	7026.200.45	03	
200	3,3-4,1	2,20	45		36	F con.	69-70	0026.201.45	01	
200	3,7-4,5	2,80	45		36	F con.	159-161	7026.201.46	03	
200	3,7-4,5	2,80	45		36	F con.	69-70	0026.201.46	01	
200	4,4-5,6	3,20	45		36	F con.	69-70	0026.200.51	01	
200	4,6-5,6	3,50	45		36	W con. 30°	71	0026.200.38	01	
200	4,8-5,8	3,50	45		36	F con.	69-70	0026.200.45	01	
200	4,8-5,8	3,50	45		36	W con.	66	0026.200.49	01	
200	5,9-6,9	3,50	45		36	F con.	69-70	0026.200.47	01	
200	6,2-7,2	4,20	45		36	F con.	69-70	0026.200.46	01	
200	4,1-5,3	3,00	65	2/9/100 + 2/9/110	36	F con.	69-70	0026.201.66	01	
200	4,4-5,6	3,20	65	2/9/100 + 2/9/110	36	F con.	69-70	0026.200.65	01	
200	4,4-5,6	3,20	65	2/9/100 + 2/9/110	36	W con.	66	0026.200.67	01	
200	4,8-5,8	3,50	65	2/9/100 + 2/9/110	36	F con.	69-70	0026.200.66	01	
200	4,4-5,6	3,20	80	2/14/110	36	F con.	69-70	0026.200.80	01	
200	4,4-5,2	3,20	50	3/13/80	42	F con.	159-161	7026.201.50	03	
200	4,4-5,6	3,20	50	3/13/80	42	F con.	69-70	0026.201.50	01	

Circular saw blades according to diameter

D mm	B mm	b mm	d mm	NL mm	Z	Tooth shape	Catalogue Page	Order No.	PG	Price
200	2,80	1,80	16	1/6/33	48	W	110-112	0047.48.200	01	
200	3,20	2,20	30		48	F	89	0030.200.31	01	
200	3,20	2,20	30	NLK	48	W	75-76, 96	0014.200.31	01	
200	3,20	2,20	30	4/5,5/52 m.A.	48	W	96	0039.202.37	01	
200	3,20	2,20	30	4/6,5/48 m.A.	48	W	97	0039.202.36	01	
200	3,30	2,80	30	2/7/42	48	FT	102-103	0042.200.31	01	
200	3,20	2,20	50	3/22/80 + 3/6/80	48	F	89	0030.200.51	01	
200	3,30	2,80	30	2/7/42	54	FT	98-99	0040.200.30	01	
200	2,20	1,80	20		60	W	107	0043.200.20	01	
200	1,50	2,40	30		60	W	80	0017.201.30	01	
200	2,40	1,80	30	NLK	60	W	79	0016.200.30	01	
200	3,20	2,20	30		60	F	89	0030.200.33	01	
200	3,20	2,20	30	NLK	60	W	77, 96	0015.200.30	01	
200	3,20	2,20	30	cs pin holes top clockwise 4/5,5/52	60	W	94-95	0039.200.30	01	
200	3,20	2,20	30	4/6,5/48 m.A.	60	W	97	0039.202.38	01	
200	3,2-4,3	2,80	30		60	F con.	69-70	0026.200.31	01	
200	3,30	2,80	30	2/7/42	60	FT	102-103	0042.200.30	01	
200	3,20	2,20	50	3/22/80 + 3/6/80	60	F	89	0030.200.53	01	
200	3,20	2,20	30	4/6,5/60 + 2/6,2/42	64	W	94-95	0039.200.33	01	
200	3,00	2,20	30	NLK	65	WWF	78	0515.200.30	01	
200	2,80	2,20	20	2/6/32	72	FT	98-99	0040.200.20	01	
200	2,20	1,60	20	2/6/32	80	FT	101	0040.200.21	01	
200	2,20	1,60	30	NLK	80	W	80	0017.200.30	01	
200	2,10	1,60	32	NLK	80	W	107	0043.200.32	01	
200	2,20	1,80	30	NLK	100	FT neg.	107	0043.200.30	01	
200	2,40	1,60	30		16 + 2	F	16	0004.200.30	01	
200	4,00	2,80	80	4/6/140	44 / 40	F	92	0032.201.40	01	
200	4,00	2,80	80	4/6/140	44 / 40	F	92	0032.202.40	01	
200	4,00	2,80	80		64 / 60	F	92	0032.203.40	01	
200	4,00	2,80	80		64 / 60	F	92	0032.204.40	01	
205	4,00	2,80	80		44	F	90	0032.201.01	01	
205	4,00	2,80	80		44	F	90	0032.202.01	01	
205	4,00	2,80	80		44	F	93	0032.202.00	01	
205	4,00	2,80	80		60	F	90	0032.203.01	01	
205	4,00	2,80	80		60	F	90	0032.204.01	01	
205	4,00	2,80	80		60	F	93	0032.204.00	01	
210	2,80	1,80	30		16	F	110-112	0047.16.209	01	
210	2,80	1,80	30	2/7/42	24	W	110-112	0047.24.211	01	
210	3,40	2,40	60		24 + 2	F	15	0004.210.60	01	
210	2,80	1,80	30		30	W	110-112	0047.30.209	01	
210	4,00	2,80	80		44	F	93	0032.212.00	01	
210	2,80	1,80	30	2/7/42	48	W	110-112	0047.48.211	01	
210	2,80	2,20	30	2/7/42	60	FT	102-103	0042.210.30	01	
210	4,00	2,80	80		60	F	93	0032.214.00	01	
215	3,00	2,00	30		30	W	110-112	0047.30.215	01	
215	3,7-4,5	2,80	50	2/7/80	32	F con.	159-161	7026.215.53	03	

Circular saw blades according to diameter

D mm	B mm	b mm	d mm	NL mm	Z	Tooth shape	Catalogue Page	Order No.	PG	Price
215	3,7-4,5	2,80	50	2/7/80	32	F con.	69-70	0026.215.53	01	
215	4,4-5,2	3,20	50	2/7/80 3/15/80	42	F con.	159-161	7026.215.50	03	
215	4,4-5,6	3,20	50	2/7/80 + 3/15/80	42	F con.	69-70	0026.215.50	01	
215	4,8-5,6	3,50	50	2/7/80	42	F con.	159-161	7026.215.51	03	
215	4,8-5,8	3,50	50	2/7/80	42	F con.	69-70	0026.215.51	01	
215	3,00	2,00	30	2/7/42	48	W	110-112	0047.48.215	01	
216	3,00	2,40	30	2/7/42	60	FT	102-103	0042.216.30	01	
216	2,20	1,60	30	2/7/42	80	FT	104	0042.216.29	01	
216	3,00	2,40	30	2/7/42	80	FT	102-103	0042.216.31	01	
220	3,00	2,00	30		24	W	110-112	0047.24.221	01	
220	3,60	2,40	30		28	W	20	0005.220.30	01	
220	3,00	2,00	30		30	W	110-112	0047.30.221	01	
220	6,4-7,2	4,40	20		32	F con.	159-161	7026.220.20	03	
220	1,40	1,00	50		33	FW	19	0005.220.50	01	
220	1,40	1,00	60		33	FW	19	0005.220.60	01	
220	1,40	1,00	65		33	FW	19	0005.220.65	01	
220	6,4-7,4	4,40	20		36	F con.	69-70	0026.220.20	01	
220	3,20	2,20	30	NLK	36	W	75-76	0014.220.30	01	
220	3,20	2,20	30	4/6,5/60 m.A.	36	W	96	0039.222.30	01	
220	3,20	2,20	30	NLK	40	HDF	85	0025.220.30	01	
220	3,20	2,20	30	NLK	40	HDF	88	0027.220.30	01	
220	3,20	2,20	30	NLK	40	W	75-76	0014.220.31	01	
220	4,55	3,60	20		48	W, AW	71	0026.220.21	01	
220	3,20	2,20	30	NLK	48	HDF	85	0025.220.31	01	
220	3,3-4,1	2,40	45		60	F con.	69-70	0026.220.46	01	
220	4,00	2,80	80		60	F, AW	92	0032.221.41	01	
220	4,00	2,80	80		60	F, AW	92	0032.222.41	01	
220	3,20	2,20	30	NLK	64	FT	83	0021.220.30	01	
220	3,20	2,20	30	NLK	64	W	77	0015.220.30	01	
220	3,20	2,20	30	4/6,5/60 m.A.	64	W	96	0039.222.31	01	
220	3,00	2,20	30	NLK	70	WWF	78	0515.220.30	01	
220	3,30	2,80	30	NLK	72	FT	102-103	0042.220.30	01	
220	2,20	1,60	30	NLK	88	W	80	0017.220.30	01	
225	3,00	2,00	30	2/7/42	24	W	110-112	0047.24.225	01	
225	4,00	3,00	30		28	F	19	0005.225.30	01	
225	1,70	1,20	60		28	T	19	0005.225.60	01	
225	3,00	2,00	30		30	W	110-112	0047.30.225	01	
225	3,00	2,00	30	2/7/42	48	W	110-112	0047.48.225	01	
225	3,00	2,00	30	2/7/42	60	W	110-112	0047.60.225	01	
225	3,00	2,00	30	2/7/42	80	W	110-112	0047.80.225	01	
225	2,00		32	2/8/45 + 2/9/50 + 2/11/63	120	C	108-109	0836.225.120	02	
225	2,00		40	2/8/55 + 4/12/64	120	C	108-109	0836.225.121	02	
225	2,00		32	2/8/45 + 2/9/50 + 2/11/63	180	BW	108-109	0836.225.180	02	
225	2,00		40	2/8/55 + 2/12/64	180	BW	108-109	0836.225.181	02	

Circular saw blades according to diameter

D mm	B mm	b mm	d mm	NL mm	Z	Tooth shape	Catalogue Page	Order No.	PG	Price
225	2,00		32	2/8/45 + 2/9/50 + 2/11/63	220	BW	108-109	0836.225.220	02	
225	2,00		40	2/8/55 + 4/12/64	220	BW	108-109	0836.225.221	02	
225	2,00	1,40	70		20 + 2	F	14	0004.225.70	01	
225	2,80	2,00	70		20 + 2	F	14	0004.225.71	01	
225	2,00	1,40	30 - 80		20 + 2	F	14	0004.225.30	01	
225	2,80	2,00	30 - 80		20 + 2	F	14	0004.225.31	01	
225	4,00	3,00	30 - 80		28 + 2	F	14	0004.225.72	01	
230	3,00	2,00	30		24	W	110-112	0047.24.231	01	
230	3,00	2,00	16		30	W	110-112	0047.30.230	01	
230	3,00	2,00	16		40	W	110-112	0047.40.230	01	
230	3,20	2,20	30	NLK	40	W	75-76	0014.230.30	01	
230	3,20	2,20	30	NLK	64	W	77	0015.230.30	01	
235	3,00	2,00	30		24	W	110-112	0047.24.236	01	
235	3,00	2,00	30		30	W	110-112	0047.30.236	01	
240	3,00	2,00	30		24	W	110-112	0047.24.240	01	
240	3,00	2,00	30	4/5,5/52 m.A.	30	W	96	0039.242.31	01	
240	3,00	2,00	30		30	W	110-112	0047.30.240	01	
240	3,20	2,20	30		54	FT	83	0021.240.30	01	
240	3,20	2,20	30	4/5,5/52 m.A.	54	FT	96	0039.242.30	01	
240	3,60	2,20	30	cs pin holes top clockwise 4/5,5/52	54	W	94-95	0039.240.30	01	
240	3,00	2,00	30	2/7/42	56	W	110-112	0047.56.240	01	
240	3,00	2,20	30	cs pin holes i.W. 8/5,5/52	75	WWF	78, 96	0515.240.30	01	
240	3,00	2,20	40	cs pin holes top clockwise 8/5,5/52	75	WWF	78, 96	0515.240.40	01	
250	4,00	3,00	30		4	F, SDB	115	2359.250.30	01	
250	6,00	4,50	30		4	F, SDB	115	2359.250.31	01	
250	5,50	5,00	30		12	F, AW	91	0033.250.81	01	
250	5,50	5,00	30		12	F, AW	91	0033.250.82	01	
250	5,50	5,00	80		12	F, AW	168	7033.250.81	03	
250	5,50	5,00	80		12	F, AW	168	7033.250.82	03	
250	5,50	5,00	80	12/6/190	12	F, AW	91	0033.250.84	01	
250	5,50	5,00	80	12/6/190	12	F, AW	91	0033.250.86	01	
250	4,40	2,80	30		18	F, SDB	21	0007.250.30	01	
250	2,80	2,00	70		18	F, SDB	20	0005.252.70	01	
250	2,40	1,60	30		24	F	19	0005.250.32	01	
250	3,20	2,20	30	NLK	24	W, SDB	72	0010.250.30	01	
250	3,20	2,20	30	2/7/42	24	W, SDB	110-112	0047.24.251	01	
250	3,40	2,20	30		24	F	20	0005.250.30	01	
250	1,80	1,20	60		24	WS, SDB	19	0005.250.60	01	
250	2,40	1,60	70		24	F	19	0005.250.72	01	
250	2,80	2,00	70		24	F	19	0005.250.91	01	
250	3,20	2,20	30		30	W	110-112	0047.30.252	01	
250	1,70	1,10 / 2,50	40		30	T	19	0005.250.40	01	
250	1,60	1,20	40		36	FW	19	0005.250.01	01	
250	4,00	2,80	80	6/6/200	36	F, AW	169	7032.250.07	03	
250	4,00	2,80	80	6/6/200	36	F, AW	169	7032.250.08	03	
250	3,20	2,20	20		40	W	110-112	0047.40.250	01	

Circular saw blades according to diameter

D mm	B mm	b mm	d mm	NL mm	Z	Tooth shape	Catalogue Page	Order No.	PG	Price
250	2,70	2,00	30	NLK	40	W	74	0013.250.30	01	
250	3,20	2,20	30	NLK	40	W	73	0012.250.30	01	
250	8,00	6,00	30		40	F	106	0043.250.30	01	
250	8,00	6,00	40		40	F	106	0043.250.40	01	
250	2,10	1,40	30	NLK	42	W	74	0013.250.31	01	
250	3,20	2,20	20		48	W	81	0018.250.21	01	
250	3,20	2,20	30	NLK	48	FT	157	7021.250.30	03	
250	3,20	2,20	30		48	W	155	7014.250.30	03	
250	3,20	2,20	30	NLK	48	HDF	85	0025.250.30	01	
250	3,20	2,20	30	NLK	48	HDF	88	0027.250.30	01	
250	3,20	2,20	30	NLK	48	HFFT	87	0225.250.30	01	
250	3,20	2,20	30	NLK	48	HFT	86	0025.250.33	01	
250	3,20	2,20	30	NLK	48	W	75-76	0014.250.30	01	
250	3,20	2,20	30	NLK	48	W	96	0039.252.31	01	
250	3,20	2,20	30	8/5,5/90	48	W	97	0039.252.30	01	
250	3,20	2,20	35	1/6/50	48	W	96	0039.252.36	01	
250	3,30	2,80	30	NLK	54	FT	102-103	0042.250.31	01	
250	3,20	2,20	30	NLK	60	FT	157	7021.250.31	03	
250	3,20	2,20	30	NLK	60	W, AW	155	7014.250.007	03	
250	3,20	2,20	30	NLK	60	FT	83	0021.250.30	01	
250	3,20	2,20	30	NLK	60	W	75-76	0014.250.31	01	
250	3,20	2,20	30		60	W	81	0018.250.35	01	
250	3,20	2,20	30	NLK	60	W	96	0039.252.33	01	
250	3,20	2,20	30	8/5,5/90	60	W	97	0039.252.32	01	
250	3,30	2,80	30	NLK	60	FT	102-103	0042.250.29	01	
250	3,20	2,20	35	1/6/50	60	W	96	0039.252.37	01	
250	3,30	2,80	30	NLK	66	FT	98-99	0040.250.30	01	
250	3,20	2,20	30		72	W	155	7015.250.31	03	
250	3,20	2,20	30	NLK	78	FFT	84	0221.250.30	01	
250	1,50	2,40	30		80	W	80	0017.251.30	01	
250	2,10	1,40	30	NLK	80	W	74	0013.250.32	01	
250	2,40	1,80	30	NLK	80	W	79	0016.250.29	01	
250	2,70	2,00	30	NLK	80	W	79	0016.250.30	01	
250	2,80	2,00	30		80	FT	105	0020.250.30	03	
250	2,80	2,20	30	NLK	80	FT	102-103	0042.250.34	01	
250	3,00	2,20	30	NLK	80	WWF	78	0515.250.30	01	
250	3,20	2,20	30	NLK	80	FT	83	0021.250.31	01	
250	3,20	2,20	30	NLK	80	W	77	0015.250.30	01	
250	3,20	2,20	30	NLK	80	W	77	0115.250.30	01	
250	3,20	2,20	30		80	W	81	0018.250.34	01	
250	3,20	2,20	30	NLK	80	W	96	0039.252.35	01	
250	3,20	2,20	30	8/5,5/90	80	W	97	0039.252.34	01	
250	3,30	2,80	30	NLK	80	FT	98-99	0040.250.35	01	
250	3,30	2,80	30	NLK	80	FT	102-103	0042.250.30	01	
250	3,30	2,80	30	NLK	80	FT	102-103	0142.250.30	01	
250	3,30	2,80	32	NLK	80	FT	102-103	0042.250.32	01	
250	3,20	2,20	35	1/6/50	80	W	96	0039.252.38	01	
250	3,30	2,80	30	NLK	96	FT	102-103	0042.250.28	01	
250	2,20	1,60	30	NLK	100	W	80	0017.250.30	01	
250	2,20	1,80	30	NLK	100	FT	104	0042.250.27	01	
250	2,20	1,80	30		100	W	81	0018.250.30	01	
250	2,40	1,80	30	NLK	100	FT	101	0040.250.31	01	

Circular saw blades according to diameter

D mm	B mm	b mm	d mm	NL mm	Z	Tooth shape	Catalogue Page	Order No.	PG	Price
250	2,00		32	2/8/45 + 2/9/50 + 2/11/63	100	C	108-109	0836.250.100	02	
250	2,00		40	2/8/55 + 4/12/64	100	C	108-109	0836.250.101	02	
250	2,10	1,60	30	NLK	120	FT neg.	107	0043.250.31	01	
250	2,00		32	2/8/45 + 2/9/50 + 2/11/63	128	C	108-109	0836.250.128	02	
250	2,00		40	2/8/55 + 4/12/64	128	C	108-109	0836.250.129	02	
250	2,20	1,80	32		130	F	81	0018.250.33	01	
250	2,00		32	2/8/45 + 2/9/50 + 2/11/63	200	BW	108-109	0836.250.200	02	
250	2,00		40	2/8/55 + 4/12/64	200	BW	108-109	0836.250.201	02	
250	2,80	2,00	30 - 86		16 + 2	F	14	0004.250.31	01	
250	3,40	2,20	30 - 86		16 + 2	F	14	0004.250.30	01	
250	3,40	2,20	30 - 86		18 + 2	F	14	0004.256.30	01	
250	4,40	2,80	30		18 + 3	F, SDB	18	0004.253.30	01	
250	2,80	2,00	60		20 + 2	F	14	0004.250.60	01	
250	3,60	2,40	75		20 + 2	F	15	0004.250.75	01	
250	3,20	2,20	30		24 + 2	F	14	0004.254.30	01	
250	4,00	3,00	40		24 + 2	F	14	0004.250.42	01	
250	6,00	4,40	40		24 + 2	F	14	0004.250.43	01	
250	3,20	2,20	60		24 + 2	F	14	0004.254.60	01	
250	3,60	2,40	75		24 + 2	F	15	0004.251.75	01	
250	2,00	1,40	40		24 + 3	T	16	0004.250.40	01	
250	3,00	2,00	30 - 80		28 + 2	F, SDB	14	0004.250.03	01	
250	2,00	1,40	80		30 + 2	F, SDB	14	0004.250.02	01	
250	2,60	1,80	80		30 + 2	F, SDB	14	0004.250.80	01	
250	4,00	2,80	80	6/6/200	54 / 48	F, AW	169	7032.250.09	03	
250	4,00	2,80	80	6/6/200	54 / 48	F, AW	169	7032.250.11	03	
250	4,00	2,80	80		54 / 48	F	92	0032.250.08	01	
250	4,00	2,80	80		54 / 48	F	92	0032.250.09	01	
250	4,00	2,80	80	6/6/200	66 / 60	F, AW	169	7032.250.21	03	
250	4,00	2,80	80	6/6/200	66 / 60	F, AW	169	7032.250.22	03	
250	4,00	2,80	80	6/6/200	78 / 72	F, AW	169	7032.250.23	03	
250	4,00	2,80	80	6/6/200	78 / 72	F, AW	169	7032.250.24	03	
250	4,00	2,80	80		78 / 72	F	92	0032.251.80	01	
250	4,00	2,80	80		78 / 72	F	92	0032.250.80	01	
250	4,00	2,80	100		78 / 72	F	92	0032.251.10	01	
250	4,00	2,80	100		78 / 72	F	92	0032.250.10	01	
254	3,00	2,00	30	NLK	42	FT	83	0021.254.30	01	
255	7,00	5,00	30		6	F, AW	91	0033.255.85	01	
255	7,00	5,00	30		6	F, AW	91	0033.255.84	01	
255	6,00	5,00	80		6	F, AW	168	7033.255.83	03	
255	6,00	5,00	80		6	F, AW	168	7033.255.84	03	
255	7,00	5,00	80	12/6/190	6	F, AW	91	0033.255.89	01	
255	7,00	5,00	80	12/6/190	6	F, AW	91	0033.255.88	01	
255	4,30	2,80	80		36	F, AW	168	7032.255.87	03	
255	4,30	2,80	80		36	F, AW	168	7032.255.86	03	
255	4,00	2,80	30		48	E, AW	91	0032.255.81	01	

Circular saw blades according to diameter

D mm	B mm	b mm	d mm	NL mm	Z	Tooth shape	Catalogue Page	Order No.	PG	Price
255	4,00	2,80	30		48	E, AW	91	0032.255.80	01	
255	4,00	2,80	80		48	F	93	0032.252.00	01	
255	4,00	2,80	80	6/6/190	48	F	90	0032.251.02	01	
255	4,00	2,80	80	6/6/190	48	F	90	0032.252.02	01	
255	4,00	2,80	80	12/6/190	48	E, AW	91	0032.255.85	01	
255	4,00	2,80	80	12/6/190	48	E, AW	91	0032.255.84	01	
255	4,30	2,80	80		48	F, AW	168	7032.255.81	03	
255	4,30	2,80	80		48	F, AW	168	7032.255.82	03	
255	4,00	2,80	100		48	F	90	0032.255.01	01	
255	4,00	2,80	100		48	F	90	0032.255.02	01	
255	3,20	2,20	30		60	F	89	0030.255.31	01	
255	4,00	2,80	30		60	E, AW	91	0032.255.83	01	
255	4,00	2,80	30		60	E, AW	91	0032.255.82	01	
255	4,00	2,80	80	12/6/190	60	E, AW	91	0032.255.87	01	
255	4,00	2,80	80	12/6/190	60	E, AW	91	0032.255.86	01	
255	4,00	2,80	80		60	F	90	0032.253.02	01	
255	4,00	2,80	80		60	F	90	0032.254.02	01	
255	4,00	2,80	80		60	F	93	0032.254.00	01	
255	4,30	2,80	80		60	F, AW	168	7032.255.83	03	
255	4,30	2,80	80		60	F, AW	168	7032.255.84	03	
255	4,00	2,80	100		60	F	90	0032.255.03	01	
255	4,00	2,80	100		60	F	90	0032.255.04	01	
255	3,00	2,20	30	NLK	80	WWF	78	0515.255.30	01	
255	4,00	2,80	100		54 / 48	F	92	0032.255.41	01	
255	4,00	2,80	100		54 / 48	F	92	0032.256.41	01	
255	4,00	2,80	80		60 / 54	F	92	0032.257.41	01	
255	4,00	2,80	80		60 / 54	F	92	0032.258.41	01	
260	5,00	4,00	80		6	F, AW	168	7033.260.85	03	
260	5,00	4,00	80		6	F, AW	168	7033.260.86	03	
260	3,40	2,20	30 - 80		20 + 2	F	14	0004.260.30	01	
260	3,00	2,00	30		24	W	110-112	0047.24.260	01	
260	3,60	2,40	30		28	F	20	0005.260.30	01	
260	4,00	2,80	80		48	F	93	0032.266.00	01	
260	4,00	2,80	80		60	F	93	0032.268.00	01	
260	4,00	2,80	80		72	F	93	0032.260.10	01	
270	3,00	2,00	30		48	W	110-112	0047.48.270	01	
275	3,30	2,80	40	2/9/55 + 4/12/64	72	FT	98-99	0040.275.40	01	
275	3,30	2,80	40	2/9/55 + 4/12/64	88	FT	102-103	0042.275.39	01	
275	2,50		32	2/8/45 + 2/9/50 + 2/11/63	110	C	108-109	0836.275.112	02	
275	2,50		40	2/8/55 + 4/12/64	110	C	108-109	0836.275.113	02	
275	2,50		32	2/8/45 + 2/9/50 + 2/11/63	140	C	108-109	0836.275.142	02	
275	2,50		40	2/8/55 + 4/12/64	140	C	108-109	0836.275.143	02	
275	2,50		32	2/8/45 + 2/9/50 + 2/11/63	180	C	108-109	0836.275.182	02	

Circular saw blades according to diameter

D mm	B mm	b mm	d mm	NL mm	Z	Tooth shape	Catalogue Page	Order No.	PG	Price
275	2,50		40	2/8/55 + 4/12/64	180	C	108-109	0836.275.183	02	
275	2,50		32	2/8/45 + 2/9/50 + 2/11/63	220	BW	108-109	0836.275.220	02	
275	2,50		40	2/8/55 + 4/12/64	220	BW	108-109	0836.275.223	02	
275	2,50		32	2/8/45 + 2/9/50 + 2/11/63	280	BW	108-109	0836.275.292	02	
275	2,50		40	2/8/55 + 4/12/64	280	BW	108-109	0836.275.283	02	
280	3,40	2,20	80		20 + 2	F	14	0004.280.80	01	
280	3,20	2,20	30		28	W	110-112	0047.28.280	01	
280	2,20	1,40	60		32	WS, SDB	19	0005.280.60	01	
280	3,20	2,20	30	8/5,5/90	48	W	97	0039.282.30	01	
280	3,20	2,20	30	2/7/42	48	W	110-112	0047.48.280	01	
280	3,20	2,20	30	NLK	60	FT	83	0021.280.30	01	
280	3,20	2,20	30	8/5,5/90	60	W	97	0039.282.31	01	
280	3,20	2,20	30		60	W	110-112	0047.60.280	01	
280	3,20	2,20	30	NLK + 2/13/94	60	FT	42-51	2.0024.280.60.30	01	
280	3,40	2,40	45		60	W 30°	71	0026.280.48	01	
280	4,4-5,2	3,20	45		72	F con.	69-70	0026.280.47	01	
280	4,8-5,8	3,50	45		72	W con.	71	0026.280.46	01	
280	3,20	2,20	30	8/5,5/90	80	W	97	0039.282.32	01	
280	3,30	2,80	30	NLK	80	FT	102-103	0042.280.30	01	
280	5,00	3,50	45		84	W 30°	71	0026.280.45	01	
280	3,20	2,60	30	NLK	96	FT	98-99	0040.280.30	01	
295	7,20	6,20 / 7,20	30		18	F	21	0005.295.30	01	
295	8,00	7,00	30		18	F	21	0005.295.31	01	
300	5,00	4,00	30		4	F, SDB	115	2359.300.30	01	
300	6,00	4,50	30		4	F, SDB	115	2359.300.31	01	
300	8,00	6,00	40		16	F	106	0043.300.41	01	
300	3,20	2,20	30	NLK	20	F, SDB	22	0008.300.30	01	
300	3,40	2,20	30		20	F, SDB	20	0005.302.30	01	
300	3,40	2,20	70		20	F, SDB	20	0005.302.70	01	
300	4,40	2,80	30 - 86		20	F, SDB	21	0007.300.30	01	
300	2,80	2,00	30		28	F	19, 20	0005.300.31	01	
300	3,20	2,20	30	NLK	28	W, SDB	72	0010.300.30	01	
300	3,40	2,20	30		28	F	20	0005.300.30	01	
300	4,40	2,80	30		28	F	20	0005.300.32	01	
300	2,80	2,00	70		28	F	19, 20	0005.300.91	01	
300	3,40	2,20	70		28	F	20	0005.300.70	01	
300	3,40	2,20	80	2/13/100 + 4/6,6/95 + 6/5,5/91	28	F	20	0005.300.80	01	
300	3,40	2,20	80	2/13/100 + 4/6,6/95 + 6/5,5/91	28	F	20	0005.300.84	01	
300	3,40	2,20	80	2/13/100	28	F	20	0005.300.81	01	
300	3,20	2,20	30		30	W	110-112	0047.30.300	01	
300	3,7-4,5	3,20	30	2/11/73 + 2/13/94	32	F con.	159-161	7026.300.33	03	

Circular saw blades according to diameter

D mm	B mm	b mm	d mm	NL mm	Z	Tooth shape	Catalogue Page	Order No.	PG	Price
300	4,4-5,2	3,20	30	2/11/73 + 2/13/94	32	F con.	159-161	7026.300.30	03	
300	3,20	2,20	30		36	W	20	0005.301.30	01	
300	3,20	2,20	30	NLK	36	W	73	0012.300.29	01	
300	3,20	2,20	30	NLK	36	W	75-76	0014.300.33	01	
300	3,20	2,20	30	8/5,5/90	36	W	97	0039.302.30	01	
300	3,7-4,5	2,80	30	2/11/73 + 2/13/94	36	F con.	69-70	0026.300.33	01	
300	4,4-5,2	3,20	30	2/11/73 + 2/13/94	36	F con.	69-70	0026.300.30	01	
300	3,80	2,60	80	2/13/100 + 4/6,6/95 + 6/5,5/91	36	F	20	0005.300.82	01	
300	2,40	1,80	30	2/7/42 2/9/46,5 2/10/60	43	MicroGeo®	165	7821.300.43.30-B24		
300	2,70	2,00	30	NLK	48	W	74	0013.300.30	01	
300	3,20	2,20	30	NLK	48	W	73	0012.300.30	01	
300	4,4-5,2	3,20	30	2/11/73	48	W con.	71	0026.300.32	01	
300	4,4-5,6	3,50	50	3/15/80	48	F con.	69-70	0026.300.50	01	
300	3,7-4,5	2,80	65	2/9/100 + 2/9/110	48	W con.	71	0026.300.70	01	
300	4,1-4,9	3,00	65	2/9/100 + 2/9/110	48	W con.	71	0026.300.71	01	
300	4,4-5,6	3,20	65	2/9/100 + 2/9/110	48	W con.	71	0026.300.69	01	
300	4,8-5,8	3,50	65	2/9/110	48	W	71	0026.300.67	01	
300	3,20	2,20	30	NLK	54	W	75-76	0014.300.30	01	
300	3,20	2,20	30	8/5,5/90	54	W	97	0039.302.31	01	
300	3,20	2,20	30	NLK	60	FT	56-59	2.0024C.300.60.30	01	
300	3,60	3,00	30	NLK	60	FT	102-103	0042.300.31	01	
300	4,40	3,00	30	2/10/60	60	FFT	60	0224.300.30	01	
300	4,40	3,00	30	2/10/60	60	FT	63-65	0024.300.30	01	
300	4,40	3,20	30	NLK + 2/13/94	60	FT	42-51	2.0024.300.60.30	01	
300	3,20	2,20	60	2/14/100	60	FT	56-59	2.0024C.300.60.60	01	
300	4,40	3,20	60	2/14/100 + 2/11/115 + 2/19/120 + 2/14/125	60	FT	42-51	2.0024.300.60.60	01	
300	4,40	3,20	65	2/9/110	60	FT	42-51	2.0024.300.60.65	01	
300	4,40	3,20	65	2/9/110	60	FT	63-65	0024.300.65	01	
300	4,40	3,20	75	2/9/110	60	FT	42-51	2.0024.300.60.75	01	
300	4,40	3,20	80	4/8,5/100 + 2/7/110 + 2/14/110	60	FT	42-51	2.0024.300.60.80	01	
300	4,40	3,20	80	4/8,5/100 + 2/7/110 + 2/14/110	60	FT	63-65	0024.300.80	01	
300	4,55	3,20	20		72	W	71	0026.300.21	01	
300	3,20	2,20	30	NLK	72	FT	83	0021.300.30	01	
300	3,20	2,20	30	NLK	72	W	75-76	0014.300.31	01	
300	3,20	2,20	30	NLK	72	W	75-76	0114.300.31	01	
300	3,20	2,20	30		72	W	81	0018.300.34	01	
300	3,20	2,20	30	8/5,5/90	72	W	97	0039.302.32	01	
300	3,60	3,00	30	NLK	72	FT	98-99	0040.300.29	01	
300	3,60	3,00	30	NLK	72	FT	102-103	0042.300.29	01	
300	4,55	3,20	30	2/11/73	72	W	71	0026.300.31	01	

Circular saw blades according to diameter

D mm	B mm	b mm	d mm	NL mm	Z	Tooth shape	Catalogue Page	Order No.	PG	Price
300	4,40	3,20	60	14/100	72	FT	63-65	0024.300.60	01	
300	3,80	2,80	65	2/9/100 + 2/9/110	72	W	71	0026.300.72	01	
300	4,55	3,20	65	2/9/100 + 2/9/110	72	W	71	0026.300.68	01	
300	4,60	3,20	65	2/9/100 + 2/9/110	72	W 10°	71	0026.300.65	01	
300	4,8-5,6	3,20	65	2/9/110	72	F con.	69-70	0026.300.66	01	
300	4,40	3,00	75		72	FFT	60	0224.300.75	01	
300	4,40	3,20	75		72	FT	63-65	0024.300.75	01	
300	4,60	3,20	80	2/14/110	72	W	71	0026.300.80	01	
300	3,50	3,00	30	NLK	84	FT	98-99	0040.300.30	01	
300	3,50	3,00	32	2/10/63	84	FT	98-99	0040.300.33	01	
300	3,20	2,20	30	NLK	90	FFT	84	0221.300.30	01	
300	2,40	1,80	30	NLK	96	W	79	0016.300.29	01	
300	2,70	2,00	30	NLK	96	W	79	0016.300.30	01	
300	2,80	2,20	30	NLK	96	FT	102-103	0042.300.34	01	
300	2,90	2,20	30	NLK	96	WS	82	0020.300.16	03	
300	3,00	2,20	30		96	FT	105	0020.300.30	03	
300	3,20	2,20	30	NLK	96	FT	157	7021.300.30	03	
300	3,20	2,20	30	NLK	96	FT	83	0021.300.31	01	
300	3,20	2,20	30	NLK	96	FT	83	0121.300.31	01	
300	3,20	2,20	30	NLK	96	W	77	0015.300.30	01	
300	3,20	2,20	30	NLK	96	W	77	0115.300.30	01	
300	3,20	2,20	30		96	W	81	0018.300.33	01	
300	3,30	2,80	30	NLK	96	FT	98-99	0040.300.31	01	
300	3,50	3,00	30	NLK	96	FT	102-103	0042.300.30	01	
300	3,50	3,00	30	NLK	96	FT	102-103	0142.300.30	01	
300	3,50	3,00	32	NLK	96	FT	102-103	0042.300.32	01	
300	3,50	3,00	40	2/9/55 + 4/12/64	96	FT	102-103	0042.300.40	01	
300	2,20	1,60	30	NLK	120	FT	101	0040.300.34	01	
300	2,20	1,60	30	NLK	120	W	80	0017.300.30	01	
300	2,20	1,60	30	NLK	120	W	80	0117.300.30	01	
300	2,20	1,80	30	NLK	120	FT	104	0042.300.28	01	
300	2,20	1,80	30		120	W	81	0018.300.30	01	
300	2,50		32	2/8/45 + 2/9/50 + 2/11/63	120	C	108-109	0836.300.122	02	
300	2,50		40	2/8/55 + 4/12/64	120	C	108-109	0836.300.123	02	
300	2,50		32	2/8/45 + 2/9/50 + 2/11/63	160	C	108-109	0836.300.162	02	
300	2,50		40	2/8/55 + 4/12/64	160	C	108-109	0836.300.163	02	
300	2,50		32	2/8/45 + 2/9/50 + 2/11/63	220	BW	108-109	0836.300.222	02	
300	2,50		40	2/8/55 + 4/12/64	220	BW	108-109	0836.300.223	02	
300	3,40	2,20	70		18 + 2	F	14	0004.301.70	01	
300	3,40	2,20	30 - 96		18 + 2	F	14	0004.304.30	01	
300	3,40	2,20	70		18 + 3	F	14	0004.300.70	01	

Circular saw blades according to diameter

D mm	B mm	b mm	d mm	NL mm	Z	Tooth shape	Catalogue Page	Order No.	PG	Price
300	3,40	2,20	30 - 96		18 + 3	F	14	0004.300.30	01	
300	4,00	2,80	75		20 + 2 + 2	F	15	0004.300.75	01	
300	3,40	2,20	80		20 + 2 + 2	F	15	0004.302.80	01	
300	3,40	2,20	30 - 100		20 + 2 + 2	F	15	0004.302.00	01	
300	4,00	2,80	30 - 100		20 + 2 + 2	F	15	0004.306.00	01	
300	4,40	2,80	30		20 + 4	F, SDB	18	0004.303.30	01	
300	4,40	2,80	70		20 + 4	F, SDB	18	0004.303.70	01	
300	4,40	2,80	75		20 + 4	F, SDB	18	0004.303.75	01	
300	4,40	2,80	86		20 + 4	F, SDB	18	0004.303.86	01	
300	3,40	2,20	70		22 + 2	F	14	0004.307.70	01	
300	3,40	2,20	30 - 96		22 + 2	F	14	0004.307.30	01	
300	3,40	2,20	30	NLK	24 + 3	W	17	0004.301.30	01	
300	2,40	1,60	60		27 + 3	T	16	0004.300.60	01	
300	3,40	2,20	30 - 100		28 + 2 + 2	F, SDB	15	0004.300.01	01	
303	2,00	1,80	30	2/7/42 2/9/46,5 2/10/60	43	MicroGeo®	164	7821.303.30		
303	2,40	1,80	30	2/7/42 2/9/46,5 2/10/60	43	MicroGeo®	166	7825.303.43.30		
303	3,20	2,20	30	NLK	48	FT	157	7021.303.25	03	
303	3,20	2,20	30	NLK	48	W	155	7014.303.25	03	
303	3,00	2,20	30	NLK	60	FT	83	0021.303.30	01	
303	3,20	2,20	30	NLK	60	FT	157	7021.303.31	03	
303	3,20	2,20	30	NLK	60	W	155	7014.303.33	03	
303	3,20	2,20	30	NLK	60	HDF	85	0025.302.30	01	
303	3,20	2,20	30	NLK	60	HDF	85	0125.302.30	01	
303	3,20	2,20	30	NLK	60	HDF	88	0027.303.30	01	
303	3,20	2,20	30	NLK	60	HDF	88	0127.303.30	01	
303	3,20	2,20	30	NLK	60	HFFT	87	0225.302.30	01	
303	3,20	2,20	30	NLK	60	TT	82	0020.303.33	03	
303	3,20	2,20	30	NLK	60	WS	82	0020.303.31	03	
303	3,50	2,40	30	NLK	60	HFT	86	0025.308.34	01	
303	3,50	2,40	30	NLK	66	HFT	86	0025.303.30	01	
303	3,20	2,20	30	NLK	72	FT	157	7021.304.38	03	
303	3,20	2,20	30	NLK	72	W, AW	155	7014.303.31	03	
303	3,20	2,20	30	NLK	72	W	155	7014.303.34	03	
303	3,20	2,20	30	NLK	96	W, AW	155	7015.303.30	03	
303	3,20	2,20	30	NLK	96	FT	83	0021.304.30	01	
303	3,00	2,20	30	NLK	100	WWF	156	7515.303.30	03	
303	3,00	2,20	30	NLK	100	WWF	78	0515.303.30	01	
303	3,20	2,20	30	NLK	100	WWF	156	7515.303.31	03	
305	3,20	2,20	30		54	F	89	0030.305.31	01	
305	4,00	2,80	30	2/10/60	54	FT	63-65	0024.305.30	01	
305	4,40	3,00	30	2/10/60	54	FT	63-65	0024.305.31	01	
305	4,40	3,00	30		54	W	62	0023.305.30	01	
305	4,40	3,00	80		54	W	62	0023.305.80	01	
305	2,80	2,00	30		60	W	81	0018.305.30	01	
305	3,20	2,20	30		60	FT	83	0021.305.29	01	

Circular saw blades according to diameter

D mm	B mm	b mm	d mm	NL mm	Z	Tooth shape	Catalogue Page	Order No.	PG	Price
305	4,40	3,00	30		60	FT	158	7024.305.37	03	
305	4,40	3,00	30	2/10/60	60	FT	63-65	0024.305.32	01	
305	4,40	3,00	30	2/10/60	60	FT	63-65	0124.305.32	01	
305	4,40	3,20	30	NLK + 2/13/94	60	FT	42-51	2.0024.305.60.30	01	
305	2,80	2,20	30	NLK	80	FT	102-103	0042.305.30	01	
308	3,20	2,40	60	2/14/100	96	T	52-53	2.0024.308.96.60	01	
310	4,40	3,20	60	2/14/100 + 2/11/115 + 2/19/120 + 2/14/125	60	FT	42-51	2.0024.310.60.60	01	
310	4,40	3,20	60	2/14/100	72	FT	63-65	0024.310.60	01	
315	3,20	2,20	30		28	W	110-112	0047.28.315	01	
315	3,20	2,20	30	NLK	28	W, SDB	72	0010.315.30	01	
315	3,20	2,20	30	2/7/42	48	W	110-112	0047.48.315	01	
315	3,20	2,20	30	2/7/42	60	W	110-112	0047.60.315	01	
315	2,50		32	2/8/45 + 2/9/50 + 2/11/63	120	C	108-109	0836.315.120	02	
315	3,00		40	2/8/55 + 4/12/64	120	C	108-109	0836.315.123	02	
315	2,50		32	2/8/45 + 2/9/50 + 2/11/63	160	C	108-109	0836.315.160	02	
315	3,00		40	2/8/55 + 4/12/64	160	C	108-109	0836.315.163	02	
315	2,50		32	2/8/45 + 2/9/50 + 2/11/63	240	BW	108-109	0836.315.240	02	
315	3,00		40	2/8/55 + 4/12/64	240	BW	108-109	0836.315.243	02	
320	3,50	2,40	30	2/7/42	24	F	110-112	0047.24.320	01	
320	4,40	3,00	30	2/10/60	60	FT	63-65	0024.320.30	01	
320	4,40	3,20	30	NLK + 2/13/94	60	FT	42-51	2.0024.320.60.30	01	
320	4,40	3,20	50	3/13/80 + 3/13/95	60	FT	42-51	2.0024.320.60.50	01	
320	4,40	3,20	50	3/13/80 + 3/13/95	60	TT	61	0428.320.50	01	
320	3,60	2,80	65	2/9/110	60	FT	56-59	2.0024C.320.60.65	01	
320	4,40	3,20	65	2/9/110	60	FT	42-51	2.0024.320.60.65	01	
320	4,40	3,20	65	2/9/110	60	FT	63-65	0024.320.65	01	
320	4,40	3,20	75	3/13/95	60	FT	42-51	2.0024.320.60.75	01	
320	4,40	3,20	80	4/8,5/100 + 2/7/110 + 2/14/110	60	FT	42-51	2.0024.320.60.80	01	
320	4,40	3,20	80	4/8,5/100 + 2/7/110 + 2/14/110	60	FT	63-65	0024.320.80	01	
320	4,40	3,20	75	3/13/95	72	FT	63-65	0024.320.75	01	
320	3,50	3,00	30	NLK	84	FT	98-99	0040.320.30	01	
320	3,40	2,20	30 - 105		20 + 2	F	14	0004.321.30	01	
320	3,40	2,20	30 - 100		20 + 2 + 2	F	15	0004.322.00	01	
320	4,20	2,80	30 - 100		20 + 2 + 2	F	15	0004.326.00	01	
330	4,40	3,20	50	4/13/80	60	FT	63-65	0024.330.50	01	
330	3,20	2,20	30	NLK	80	W	75-76	0014.330.30	01	

Circular saw blades according to diameter

D mm	B mm	b mm	d mm	NL mm	Z	Tooth shape	Catalogue Page	Order No.	PG	Price
330	3,50	3,00	30	NLK	84	FT	102-103	0042.330.31	01	
330	3,50	3,00	30	NLK	102	FT	102-103	0042.330.30	01	
330	3,50	3,00	32	NLK	102	FT	102-103	0042.330.32	01	
340	5,00	3,50	45	3/14/65	108	W 30°	71	0026.341.49	01	
350	3,60	2,40	30	NLK	16	F, SDB	22	0008.350.31	01	
350	3,60	2,40	30		24	F, SDB	20	0005.352.30	01	
350	3,60	2,40	30	NLK	24	F, SDB	22	0008.350.30	01	
350	5,40	3,40	30 - 105		24	F, SDB	21	0007.350.30	01	
350	3,60	2,40	30		30	F	20	0005.350.30	01	
350	3,60	2,40	70		30	F	20	0005.350.70	01	
350	3,60	2,40	80	2/13/100 + 4/6,6/95 + 6/5,5/91	30	F	20	0005.350.80	01	
350	3,60	2,40	80	2/13/100 + 4/6,6/95 + 6/5,5/91	30	F	20	0005.350.84	01	
350	3,60	2,40	80	2/13/100	30	F	20	0005.350.81	01	
350	3,20	2,20	30	NLK	32	W, SDB	72	0010.350.30	01	
350	3,20	2,20	30	NLK	32	W, SDB	72	0110.350.30	01	
350	3,60	2,40	30	NLK	32	W, SDB	72	0010.350.31	01	
350	3,60	2,40	30		36	W	20	0005.351.30	01	
350	3,20	2,20	30	NLK	42	W	73	0012.350.29	01	
350	4,40	2,80	30	NLK	42	W	12	0001.350.30	01	
350	2,60	2,00	30	2/7/42 2/9/46,5 2/10/60	53	MicroGeo®	165	7821.350.53.30-B26		
350	2,70	2,00	30	NLK	54	W	74	0013.350.30	01	
350	3,20	2,20	30	NLK	54	W	73	0012.350.30	01	
350	3,50	2,40	30	NLK	54	W	75-76	0014.350.30	01	
350	3,50	2,40	30	NLK	54	W	75-76	0114.350.30	01	
350	3,50	2,40	30	8/5,5/90	54	W	97	0039.352.30	01	
350	4,20	3,40	30	NLK	54	FT	98-99	0040.350.33	01	
350	4,20	3,40	30	NLK	54	FT	100	0040.350.36	01	
350	4,40	3,20	30	2/10/60	54	FT	63-65	0024.350.30	01	
350	4,40	3,20	30		54	W	62	0023.350.30	01	
350	4,40	3,20	80	2/14/110	60	FT	63-65	0024.350.81	01	
350	4,25	3,20	30	NLK + 2/13/94	72	FT	42-51	2.0024.350.72.30-B42	01	
350	4,25	3,20	30	2/8,5/60	72	FT	63-65	0024.350.33	01	
350	3,20	2,20	30	NLK	72	HDF	85	0025.350.30	01	
350	3,20	2,20	30	NLK	72	HDF	88	0027.350.30	01	
350	3,50	2,40	30	NLK	72	W	155	7014.350.31	03	
350	3,50	2,40	30	NLK	72	HFFT	87	0225.350.30	01	
350	3,50	2,40	30	NLK	72	W	75-76	0014.350.31	01	
350	3,50	2,40	30	8/5,5/90	72	W	97	0039.352.31	01	
350	3,60	2,80	30	2/10/60	72	FT	56-59	2.0024C.350.72.30	01	
350	3,60	3,00	30	NLK	72	FT	102-103	0042.350.31	01	
350	4,20	3,40	30	NLK	72	FT	98-99	0040.350.31	01	
350	4,20	3,40	30	NLK	72	FT	100	0040.350.37	01	
350	4,40	3,00	30	2/10/60	72	FT	158	7024.350.05	03	
350	4,40	3,00	30	2/10/60	72	FFT	60	0224.350.31	01	
350	4,40	3,00	30	2/10/60	72	FT	63-65	0124.350.31	01	

Circular saw blades according to diameter

D mm	B mm	b mm	d mm	NL mm	Z	Tooth shape	Catalogue Page	Order No.	PG	Price
350	4,40	3,20	30	2/10/60	72	FT	63-65	0024.350.31	01	
350	4,40	3,20	30	2/8,5/60	72	FT	63-65	0024.350.32	01	
350	4,40	3,20	30	NLK	72	TT	82	0020.350.33	03	
350	4,40	3,20	30	2/10/60	72	TT	61	0428.350.30	01	
350	4,40	3,20	30		72	W	62	0023.350.31	01	
350	4,40	3,20	30	NLK	72	WS	82	0020.350.31	03	
350	4,40	3,20	30	NLK + 2/13/94	72	FT	42-51	2.0024.350.72.30-B44	01	
350	3,20	2,20	40		72	W	81	0018.350.40	01	
350	4,40	3,20	50	4/13/80	72	FT	63-65	0024.350.50	01	
350	3,60	2,80	60	2/14/100	72	FT	56-59	2.0024C.350.72.60	01	
350	4,40	3,20	60	2/14/100	72	FT	63-65	0024.350.60	01	
350	4,40	3,20	60	2/14/100	72	TT	61	0428.350.60	01	
350	4,40	3,20	60	2/14/100 + 2/11/115 + 2/19/120 + 2/14/125	72	FT	42-51	2.0024.350.72.60	01	
350	3,80	2,80	65	2/9/100 + 2/9/110	72	W	71	0026.350.67	01	
350	4,20	3,00	65	2/9/100 + 2/9/110	72	W	71	0026.350.68	01	
350	4,60	3,20	65	2/9/110	72	W	71	0026.350.66	01	
350	5,00	3,50	65	2/9/110	72	W	71	0026.350.65	01	
350	4,40	3,20	75		72	FT	42-51	2.0024.350.72.75	01	
350	4,40	3,20	80	4/8,5/100 + 2/7/110 + 2/14/110	72	FT	42-51	2.0024.350.72.80	01	
350	4,40	3,20	80	2/14/110	72	FT	63-65	0024.350.80	01	
350	3,20	2,20	30	NLK	84	FT	83	0021.350.30	01	
350	3,50	2,40	30	NLK	84	FT	83	0021.351.30	01	
350	3,50	2,40	30	8/5,5/90	84	FT	97	0039.352.33	01	
350	3,50	2,40	30	NLK	84	W	75-76	0014.350.33	01	
350	3,50	2,40	30	NLK	84	W	75-76	0114.350.33	01	
350	3,50	2,40	30	8/5,5/90	84	W	97	0039.352.32	01	
350	3,60	3,00	30	NLK	84	FT	98-99	0040.350.29	01	
350	3,60	3,00	30	NLK	84	FT	102-103	0042.350.29	01	
350	4,40	3,20	30		84	FT	158	7024.350.30	03	
350	3,50	3,00	30	NLK	90	FT	98-99	0040.350.30	01	
350	3,50	3,00	30	NLK	90	FT	98-99	0140.350.30	01	
350	3,50	3,00	32	2/10/63	90	FT	98-99	0040.350.34	01	
350	3,50	3,00	40	2/9/55 + 4/12/64	90	FT	98-99	0040.350.40	01	
350	3,50	2,40	30	NLK	96	FT	157	7021.350.30	03	
350	3,60	3,00	30		96	FT	105	0020.350.30	03	
350	3,20	2,20	30	NLK	100	WWF	156	7515.350.30	03	
350	3,50	2,40	30	NLK	102	FFT	84	0221.350.30	01	
350	2,70	2,00	30	NLK	108	W	79	0016.350.30	01	
350	2,80	2,20	30	NLK	108	FT	102-103	0042.350.34	01	
350	3,20	2,20	30	NLK	108	FT	83	0021.350.31	01	
350	3,20	2,20	30	NLK	108	W	77	0015.351.30	01	
350	3,20	2,60	30	NLK	108	FT	98-99	0040.350.35	01	
350	3,50	2,40	30	NLK	108	W	155	7015.350.30	03	
350	3,50	2,40	30	NLK	108	FT	83	0021.351.31	01	
350	3,50	2,40	30	NLK	108	W	77	0015.350.30	01	

Circular saw blades according to diameter

D mm	B mm	b mm	d mm	NL mm	Z	Tooth shape	Catalogue Page	Order No.	PG	Price
350	3,50	2,40	30	NLK	108	W	77	0115.350.30	01	
350	3,50	3,00	30	NLK	108	FT	102-103	0042.350.30	01	
350	3,50	3,00	30	NLK	108	FT	102-103	0142.350.30	01	
350	3,50	3,00	32	4/10/63	108	FT	102-103	0042.350.32	01	
350	3,50	3,00	40	2/9/55 + 4/12/64	108	FT	102-103	0042.350.40	01	
350	3,00		40	2/8/55 + 4/12/64	110	C	108-109	0836.350.114	02	
350	2,70	2,00	30	NLK	120	FT	101	0040.350.28	01	
350	2,70	2,00	30	NLK	120	FT	104	0042.350.28	01	
350	3,00		50	4/15/80 + 4/14/85	120	C	108-109	0836.350.125	02	
350	2,50		32	2/8/45 + 2/9/50 + 2/11/63	140	C	108-109	0836.350.140	02	
350	3,00		40	2/8/55 + 4/12/64	140	C	108-109	0836.350.144	02	
350	3,00		50	4/15/80 + 4/14/85	160	C	108-109	0836.350.165	02	
350	3,00		40	2/8/55 + 4/12/64	180	C	108-109	0836.350.184	02	
350	3,00		50	4/15/80 + 4/14/85	220	C	108-109	0836.350.225	02	
350	3,60	2,40	30	NLK	16 + 4	F, SDB	17	0004.351.31	01	
350	4,20	2,80	75		20 + 2 + 2	F	15	0004.350.75	01	
350	3,60	2,40	30 - 100		20 + 2 + 2	F	15	0004.352.00	01	
350	4,20	2,80	30 - 100		20 + 2 + 2	F	15	0004.356.00	01	
350	3,80	2,40	70		24 + 3	F	14	0004.350.70	01	
350	3,80	2,40	30 - 105		24 + 3	F	14	0004.350.30	01	
350	5,40	3,40	30 - 105		24 + 4	F, SDB	18	0004.353.30	01	
350	3,60	2,40	30 - 100		28 + 2 + 2	F	15	0004.350.01	01	
350	3,60	2,40	30	NLK	30 + 3	W	17	0004.351.30	01	
355	4,40	3,20	30		54	W	62	0023.355.30	01	
355	4,40	3,20	75		54	FT	63-65	0024.355.76	01	
355	4,00	2,80	30	2/10/60	72	FT	63-65	0024.355.28	01	
355	4,40	3,00	30	2/10/60	72	FFT	60	0224.355.29	01	
355	4,40	3,20	30	NLK + 2/13/94	72	FT	42-51	2.0024.355.72.30	01	
355	4,40	3,20	30	2/10/60	72	FT	63-65	0024.355.29	01	
355	4,40	3,20	30	2/10/60	72	TT	61	0428.355.30	01	
355	4,40	3,20	30		72	W	62	0023.355.31	01	
355	3,60	2,80	65	2/9/110	72	FT	56-59	2.0024C.355.72.65	01	
355	4,40	3,20	65	2/9/110	72	FT	42-51	2.0024.355.72.65	01	
355	4,40	3,20	65	2/9/110	72	FT	63-65	0024.355.65	01	
355	4,40	3,00	75		72	FFT	60	0224.355.77	01	
355	4,40	3,20	75		72	FT	42-51	2.0024.355.72.75	01	
355	4,40	3,20	75		72	FT	63-65	0024.355.77	01	
355	4,40	3,20	80	4/19/120 + 2/9/130 + 4/11/130	72	FT	42-51	2.0024.355.72.80A	01	
355	4,40	3,20	80	4/8,5/100 + 2/7/110 + 2/14/110	72	FT	42-51	2.0024.355.72.80B	01	
355	4,40	3,20	80	2/9/130 + 4/19/120	72	FT	63-65	0024.355.82	01	
355	4,40	3,20	80	4/8,50/100 + 2/7/110 + 2/14/110	72	FT	63-65	0024.355.81	01	
355	4,40	3,20	80		72	W	62	0023.355.81	01	

Circular saw blades according to diameter

D mm	B mm	b mm	d mm	NL mm	Z	Tooth shape	Catalogue Page	Order No.	PG	Price
355	3,00	2,20	30	NLK	100	WWF	78	0515.355.30	01	
360	4,40	3,20	30	NLK + 2/13/94	72	FT	42-51	2.0024.360.72.30	01	
360	4,40	3,20	65	2/9/110	72	FT	42-51	2.0024.360.72.65	01	
360	4,40	3,20	65	2/9/110	72	FT	63-65	0024.360.65	01	
360	4,40	3,20	65	2/9/110	72	TT	61	0428.360.65	01	
360	4,40	3,20	75	4/15/105 + 2/7/110	72	FT	42-51	2.0024.360.72.75	01	
370	3,60	2,40	30		26	F, SDB	110-112	0047.26.370	01	
370	3,60	3,00	30	NLK	60	FT	102-103	0042.370.30	01	
370	4,40	3,20	30	NLK + 2/13/94	72	FT	42-51	2.0024.370.72.30	01	
370	4,40	3,20	30		72	FT	63-65	0024.370.30	01	
370	3,60	3,00	30	NLK	80	FT	102-103	0042.370.31	01	
370	3,60	3,00	30	NLK	96	FT	98-99	0040.370.30	01	
370	3,60	3,00	50	4/15/80	96	FT	98-99	0040.370.50	01	
370	3,50	2,40	30	NLK	108	W	77	0015.370.30	01	
370	3,00		50	4/15/80 + 4/14/85	120	C	108-109	0836.370.122	02	
370	3,00		50	4/15/80 + 4/14/85	160	C	108-109	0836.370.162	02	
370	3,00		50	4/15/80 + 4/14/85	220	C	108-109	0836.370.222	02	
380	4,40	3,20	30		48	W	62	0023.380.30	01	
380	4,40	3,20	30		72	FT	158	7024.380.30	03	
380	4,40	3,20	30	NLK + 2/13/94	72	FT	42-51	2.0024.380.72.30	01	
380	4,40	3,20	30	2/10/60	72	FT	63-65	0024.380.30	01	
380	4,40	3,20	50	4/13/80	72	FT	42-51	2.0024.380.72.50	01	
380	4,40	3,20	50	4/13/80	72	TT	61	0428.380.50	01	
380	3,60	2,80	60		72	FT	56-59	2.0024C.380.72.60	01	
380	4,40	3,20	60	2/14/100	72	FT	158	7024.380.13	03	
380	4,40	3,20	60	2/14/100 + 2/14/125	72	FT	63-65	0024.380.60	01	
380	4,40	3,20	60	2/14/100	72	TT	82	0020.380.14	03	
380	4,40	3,20	60	2/14/100 + 2/14/125	72	TT	61	0428.380.62	01	
380	4,40	3,20	60	2/14/100 + 2/11/115 + 2/19/120 + 2/14/125	72	FT	42-51	2.0024.380.72.60-B44	01	
380	4,80	3,50	60	2/14/100	72	FT	158	7024.380.66	03	
380	4,80	3,50	60	2/14/100 + 2/14/125	72	FFT	60	0224.381.60	01	
380	4,80	3,50	60	2/14/100 + 2/14/125	72	FT	63-65	0024.381.60	01	
380	4,80	3,50	60	2/14/100 + 2/14/125	72	TT	61	0428.380.60	01	
380	4,80	3,50	60	2/14/100 + 2/11/115 + 2/19/120 + 2/14/125	72	FT	42-51	2.0024.380.72.60-B48	01	
380	3,60	2,80	65	2/9/110	72	FT	56-59	2.0024C.380.72.65	01	
380	4,40	3,20	65	2/9/110	72	FT	42-51	2.0024.380.72.65	01	
380	4,40	3,20	65	2/9/110	72	FT	63-65	0024.380.65	01	
380	4,40	3,20	65	2/9/110	72	TT	82	0020.380.65	03	
380	3,60	2,80	75	2/7/110	72	FT	56-59	2.0024C.380.72.75	01	
380	4,40	3,20	75	4/15/105 + 2/7/110	72	FT	42-51	2.0024.380.72.75	01	
380	4,40	3,20	80	4/8,5/100 + 2/7/110 + 2/14/110	72	FT	42-51	2.0024.380.72.80	01	
380	4,40	3,20	80	2/14/110	72	FT	63-65	0024.380.80	01	

Circular saw blades according to diameter

D mm	B mm	b mm	d mm	NL mm	Z	Tooth shape	Catalogue Page	Order No.	PG	Price
380	4,80	3,50	60	2/14/100 + 2/11/115 + 2/19/120 + 2/14/125	84	FT	52-53	2.0024.380.84.60	02	
380	4,80	3,50	60	2/14/100 + 2/14/125	84	FT	63-65	0024.381.61	01	
380	4,80	3,50	60	2/14/100 + 2/14/125	84	TT	82	0020.380.33	03	
380	4,80	3,50	60	2/14/100 + 2/14/125	84	WS	82	0020.380.31	03	
380	4,40	3,20	65	2/9/110	84	TT	82	0020.380.66	03	
380	4,80	3,50	60	2/14/100 + 2/14/125	96	FT	63-65	0024.381.63	01	
380	3,50	3,00	32	NLK	110	FT	102-103	0042.380.32	01	
380	4,60	3,00	75		20 + 2 + 2	F	15	0004.380.75	01	
380	3,60	2,40	30 - 105		20 + 2 + 2	F	15	0004.382.00	01	
380	4,20	2,80	30 - 105		20 + 2 + 2	F	15	0004.386.00	01	
400	3,60	2,40	30	NLK	18	F, SDB	22	0008.400.31	01	
400	3,60	2,40	30	NLK	28	F, SDB	22	0008.400.30	01	
400	4,00	2,60	30		28	F	20	0005.400.30	01	
400	5,40	3,40	30 - 105		28	F, SDB	21	0007.400.30	01	
400	3,60	2,40	30	NLK	36	W, SDB	72	0010.400.30	01	
400	3,50	2,40	30	NLK	48	W	75-76	0014.400.29	01	
400	4,40	2,80	30	NLK	48	W	12	0001.400.30	01	
400	3,50	2,40	30	NLK	60	W	75-76	0014.400.30	01	
400	3,60	2,40	30	NLK	60	W	73	0012.400.30	01	
400	4,20	3,40	30	NLK	60	FT	98-99	0040.400.33	01	
400	4,40	3,20	30		60	FT	63-65	0024.400.31	01	
400	4,40	3,20	30		60	W	62	0023.400.30	01	
400	4,40	3,20	80	4/8,5/100 + 2/7/110 + 2/14/110	60	FT	63-65	0024.400.83	01	
400	3,80	3,20	50	4/15/80	66	FT	102-103	0042.400.50	01	
400	4,25	3,20	30	NLK + 2/13/94	72	FT	42-51	2.0024.400.72.30-B42	01	
400	4,25	3,20	30	2/10/60	72	FT	63-65	0024.400.03	01	
400	4,20	3,40	30	NLK	72	FT	98-99	0040.400.31	01	
400	4,40	3,00	30		72	FFT	60	0224.400.30	01	
400	4,40	3,20	30		72	FT	158	7024.400.08	03	
400	4,40	3,20	30	NLK + 2/13/94	72	FT	42-51	2.0024.400.72.30-B44	01	
400	4,40	3,20	30	2/10/60	72	FT	63-65	0024.400.30	01	
400	4,40	3,20	30	2/10/60	72	FT	63-65	0124.400.30	01	
400	4,40	3,20	30	KS	72	FT	63-65	0024.402.30	01	
400	4,40	3,20	30		72	TT	61	0428.400.30	01	
400	4,40	3,20	30		72	W	62	0023.400.31	01	
400	4,80	3,50	30		72	TT	82	0020.400.33	03	
400	4,40	3,20	60	2/11/85	72	FT	42-51	2.0024.400.72.60	01	
400	4,40	3,20	60	2/11/85	72	FT	63-65	0024.400.60	01	
400	4,00	3,00	65	2/9/110	72	FT	56-59	2.0024C.400.72.65	01	
400	4,40	3,20	65	2/9/110	72	FT	63-65	0024.400.65	01	
400	4,80	3,50	65	2/9/110	72	FT	42-51	2.0024.400.72.65	01	
400	4,40	3,00	75	4/15/105	72	FFT	60	0224.400.75	01	
400	4,40	3,20	75	4/15/105 + 2/7/110	72	FT	42-51	2.0024.400.72.75	01	
400	4,40	3,20	75	4/15/105	72	FT	63-65	0024.400.75	01	

Circular saw blades according to diameter

D mm	B mm	b mm	d mm	NL mm	Z	Tooth shape	Catalogue Page	Order No.	PG	Price
400	4,40	3,20	80	4/19/120 + 2/9/130 + 4/11/130	72	FT	42-51	2.0024.400.72.80A	01	
400	4,40	3,20	80	4/8,5/100 + 2/7/110 + 2/14/110	72	FT	42-51	2.0024.400.72.80B	01	
400	4,40	3,20	80	2/9/130 + 4/19/120	72	FFT	60	0224.400.80	01	
400	4,40	3,20	80	4/19/120 + 2/9/130	72	FT	63-65	0024.400.80	01	
400	4,40	3,20	80		72	W	62	0023.400.81	01	
400	3,20	2,20	30	NLK	78	HDF	85	0025.400.30	01	
400	3,50	2,40	30	NLK	78	HDF	85	0125.400.30	01	
400	3,50	2,40	30	NLK	78	HFFT	87	0225.400.30	01	
400	3,50	2,40	30	NLK	84	W	75-76	0014.400.34	01	
400	4,40	2,80	30	NLK	84	W	75-76	0014.400.01	01	
400	3,60	3,00	30	NLK	90	FT	102-103	0042.400.31	01	
400	4,40	3,80	40	2/15/80 + 2/12/64	90	FT	102-103	0042.400.40	01	
400	3,60	3,00	50	4/15/80	90	FT	102-103	0042.400.51	01	
400	3,50	2,40	30	NLK	96	W	75-76	0014.400.31	01	
400	3,50	2,40	30	NLK	96	W	75-76	0114.400.31	01	
400	3,60	3,00	30	NLK	96	FT	98-99	0040.400.30	01	
400	3,80	3,00	30		96	FT	105	0020.400.30	03	
400	3,50	2,40	35		96	W	75-76	0014.400.36	01	
400	3,50		40	2/8/55 + 4/12/64	96	C	108-109	0836.400.102	02	
400	4,40	3,80	40	2/15/80 + 2/12/64	96	FT	98-99	0040.400.40	01	
400	3,60	3,00	50	4/15/80	96	FT	98-99	0040.400.50	01	
400	3,50	2,40	30	NLK	120	FT	83	0021.400.34	01	
400	3,50	2,40	30	NLK	120	W	77	0015.400.30	01	
400	3,60	2,80	30	2/10/60	120	W	75-76	0014.400.37	01	
400	3,60	3,00	30	NLK	120	FT	98-99	0040.400.41	01	
400	3,60	3,00	30	NLK	120	FT	102-103	0042.400.32	01	
400	3,50	2,40	35		120	W	77	0015.400.35	01	
400	3,50		40	2/8/55 + 4/12/64	120	C	108-109	0836.400.122	02	
400	3,00	2,40	30	NLK	130	FT	101	0040.400.29	01	
400	3,00	2,40	30	NLK	130	FT	104	0042.400.30	01	
400	3,50		40	2/8/55 + 4/12/64	160	C	108-109	0836.400.162	02	
400	3,50		40	2/8/55 + 4/12/64	200	C	108-109	0836.400.202	02	
400	4,20	2,80	30 - 110		20 + 2 + 2	F	15	0004.402.00	01	
400	4,20	2,80	30	NLK	20 + 4	F, SDB	17	0004.401.31	01	
400	4,20	2,80	30 - 105		24 + 3	F	14	0004.400.30	01	
400	5,40	3,40	30 - 105		28 + 4	F, SDB	18	0004.403.30	01	
400	4,20	2,80	30	NLK	30 + 3	W	17	0004.401.30	01	
401	3,50	2,50	200,4		10	F	13	0003.401.01	01	
401	3,50	2,50	200,4		10	F	13	0003.401.02	01	
405	3,00	2,20	30	NLK	120	WWF	78	0515.405.30	01	
410	3,60	2,40	30		28	F, SDB	110-112	0047.28.410	01	
415	3,50	2,50	210		11	F	13	0003.415.01	01	
415	3,50	2,50	210		11	F	13	0003.415.02	01	
420	3,80	2,60	40		48	W	81	0018.420.39	01	

Circular saw blades according to diameter

D mm	B mm	b mm	d mm	NL mm	Z	Tooth shape	Catalogue Page	Order No.	PG	Price
420	3,80	3,00	30	2/10,5/70	56	FT	98-99	0040.420.34	01	
420	4,60	3,20	60	2/19/120 + 2/14/125	72	FT	63-65	0024.420.60	01	
420	4,80	3,50	60	2/14/125 + 2/19/120	72	FFT	60	0224.421.60	01	
420	4,80	3,50	60	2/14/125 + 2/19/120	72	FT	63-65	0024.421.60	01	
420	4,80	3,50	60	2/14/100 + 2/11/115 + 2/19/120 + 2/14/125	72	FT	42-51	2.0024.420.72.60	02	
420	4,40	3,20	80	2/14/110	72	FT	63-65	0024.420.80	01	
420	4,80	3,50	60	2/14/125 + 2/19/120	84	FT	63-65	0024.421.61	01	
420	3,80	3,20	30	2/10,5/70	90	FT	102-103	0042.420.31	01	
420	4,40	3,80	30	2/10,5/70	90	FT	102-103	0042.420.33	01	
420	3,50	3,00	30	2/10,5/70	96	FT	98-99	0040.420.30	01	
420	3,50	3,00	30	2/10,5/70	96	FT	98-99	0140.420.30	01	
420	4,40	3,80	30	2/10,5/70	96	FT	98-99	0040.420.31	01	
420	3,80	3,20	30	2/10,5/70	108	FT	102-103	0042.420.30	01	
420	3,50	2,40	40		120	W	81	0018.420.40	01	
425	4,20	2,80	30 - 105		20 + 2 + 2	F	15	0004.422.00	01	
430	4,40	3,20	30	NLK + 2/13/94	72	FT	42-51	2.0024.430.72.30	01	
430	4,40	3,20	30		72	FT	63-65	0024.430.30	01	
430	4,40	3,20	30		72	W	62	0023.430.31	01	
430	4,40	3,20	60	2/11/85	72	FT	42-51	2.0024.430.72.60	01	
430	4,00	3,00	65	2/9/110	72	FT	56-59	2.0024C.430.72.65	01	
430	4,40	3,20	65	2/9/110	72	FT	63-65	0024.430.65	01	
430	4,40	3,20	65	2/9/110	72	TT	82	0020.430.65	03	
430	4,80	3,50	65	2/9/110	72	FT	42-51	2.0024.430.72.65	01	
430	4,80	3,50	70	4/19/120 + 2/9/130 + 4/11/130	72	FT	42-51	2.0024.430.72.70	01	
430	4,80	3,50	70	4/11/130	72	FT	63-65	0024.430.70	01	
430	4,40	3,20	75	4/15/105 + 2/7/110	72	FT	42-51	2.0024.430.72.75	01	
430	4,40	3,20	75	4/15/105	72	FT	63-65	0024.430.77	01	
430	4,40	3,20	75	4/15/105	72	TT	82	0020.430.75	03	
430	4,40	3,20	80	4/19/120 2/9/130	72	FT	158	7024.430.05	03	
430	4,40	3,20	80	4/19/120 + 2/9/130 + 4/11/130	72	FT	42-51	2.0024.430.72.80	01	
430	4,40	3,20	80	2/9/130 + 4/19/120	72	FT	63-65	0024.430.80	01	
430	3,50	3,00	30	2/10,5/70	96	FT	98-99	0040.430.30	01	
430	4,40	3,20	75	4/15/105	96	FT	63-65	0024.430.75	01	
450	4,40	2,80	30	NLK	20	F, SDB	22	0008.450.30	01	
450	3,80	3,00	30		36	FT	100	0040.450.34	01	
450	4,40	2,80	30	NLK	40	W	75-76	0014.450.29	01	
450	4,40	2,80	30	NLK	40	W, SDB	72	0010.450.30	01	
450	4,40	2,80	80	2/13/100	40	W	75-76	0014.450.80	01	
450	4,40	2,80	30	NLK	54	W	12	0001.450.30	01	
450	4,40	3,20	30		54	FT	63-65	0024.450.31	01	
450	4,40	3,20	30		54	W	62	0023.450.30	01	
450	4,40	3,00	30	NLK	60	W	75-76	0014.450.30	01	
450	4,00	2,80	30	NLK	66	W	73	0012.450.30	01	
450	4,40	3,20	30	NLK + 2/13/94	72	FT	42-51	2.0024.450.72.30	01	
450	4,40	3,20	30	2/10/60	72	FFT	60	0224.450.30	01	

Circular saw blades according to diameter

D mm	B mm	b mm	d mm	NL mm	Z	Tooth shape	Catalogue Page	Order No.	PG	Price
450	4,40	3,20	30	2/10/60	72	FT	63-65	0024.450.30	01	
450	4,40	3,20	30		72	W	62	0023.450.31	01	
450	4,60	3,20	30	2/10/60	72	W	62	0023.450.32	01	
450	4,80	3,50	30		72	FT	158	7024.450.30	03	
450	4,80	3,50	30	2/8,5/60	72	FT	63-65	0024.450.32	01	
450	4,80	3,80	30		72	FT	98-99	0040.450.32	01	
450	4,80	3,80	30		72	FT	100	0040.450.35	01	
450	4,40	3,20	60	2/14/100 + 2/11/115 + 2/19/120 + 2/14/125	72	FT	42-51	2.0024.450.72.60-B44	01	
450	4,80	3,50	60	2/19/120 2/14/125	72	FT	158	7024.450.62	03	
450	4,80	3,50	60	2/14/125 + 2/19/120	72	FFT	60	0224.450.62	01	
450	4,80	3,50	60	2/14/125 + 2/19/120	72	FT	63-65	0024.450.62	01	
450	4,80	3,50	60	2/14/125 + 2/19/120	72	TT	82	0020.450.63	03	
450	4,80	3,50	60	2/14/125 + 2/19/120	72	TT	61	0428.450.60	01	
450	4,80	3,50	60	2/14/125 + 2/19/120	72	WS	82	0020.450.61	03	
450	4,80	3,50	60	2/14/100 + 2/11/115 + 2/19/120 + 2/14/125	72	FT	42-51	2.0024.450.72.60-B48	01	
450	4,40	3,20	75	4/15/105 + 2/7/110	72	FT	42-51	2.0024.450.72.75	01	
450	4,40	3,20	80	4/8,5/100 + 2/7/110 + 2/14/110	72	FT	42-51	2.0024.450.72.80-B44	01	
450	4,40	3,20	80	KS	72	FT	63-65	0024.450.80	01	
450	4,40	3,20	80	4/8,5/100 + 2/7/110 + 2/14/110	72	FT	63-65	0024.450.81	01	
450	4,40	3,20	80	2/9/130 + 4/19/120	72	FT	63-65	0024.450.82	01	
450	4,80	3,50	80	4/19/120 + 2/9/130 + 4/11/130	72	FT	42-51	2.0024.450.72.80-B48	01	
450	4,80	3,50	80	4/19/120 + 2/9/130	72	FFT	60	0224.450.83	01	
450	4,80	3,50	80	4/19/120 + 2/9/130	72	FT	63-65	0024.450.83	01	
450	4,80	3,00	30	NLK	84	W	75-76	0014.450.01	01	
450	4,80	3,50	60	2/14/125 + 2/19/120	84	FT	63-65	0024.450.64	01	
450	4,40	3,00	30	NLK	96	W	75-76	0014.450.31	01	
450	4,40	3,80	30		96	FT	98-99	0040.450.31	01	
450	4,80	4,00	30		96	FT	102-103	0042.450.42	01	
450	4,00	3,40	30		102	FT	105	0020.450.30	03	
450	4,40	3,80	30		102	FT	98-99	0040.450.30	01	
450	4,40	3,80	30		120	FT	98-99	0040.450.33	01	
450	3,60	2,80	30	NLK	130	WWF	78	0515.450.30	01	
450	4,00	2,80	30	NLK	138	W	77	0015.450.30	01	
450	4,80	3,50	30	NLK	138	W	77	0015.450.31	01	
450	4,60	3,20	30 - 110		20 + 2 + 2	F	15	0004.452.00	01	
450	4,20	2,80	30	NLK	28 + 4	F, SDB	17	0004.450.31	01	
450	4,20	2,80	30	NLK	36 + 4	W	17	0004.451.30	01	
460	4,40	3,50	30	2/13/94	36	FT	100	0040.460.30	01	
460	4,40	3,20	30	2/13/94	54	FT	63-65	0024.460.31	01	

Circular saw blades according to diameter

D mm	B mm	b mm	d mm	NL mm	Z	Tooth shape	Catalogue Page	Order No.	PG	Price
460	4,40	3,20	30	2/13/94	54	W	62	0023.460.30	01	
460	4,40	3,20	30	NLK + 2/13/94	72	FT	42-51	2.0024.460.72.30	01	
460	4,40	3,20	30	2/13/94	72	FFT	60	0224.460.30	01	
460	4,40	3,20	30	2/13/94	72	FT	63-65	0024.460.30	01	
460	5,00	3,60	30		72	TT	82	0020.460.33	03	
470	4,80	3,50	70	4/19/120 + 2/9/130 + 4/11/130	72	FT	42-51	2.0024.470.72.70	01	
470	4,80	3,50	70	4/11/130	72	FT	63-65	0024.470.70	01	
470	4,80	3,50	75	4/15/105 + 2/7/110	72	FT	42-51	2.0024.470.72.75	01	
470	4,40	3,20	75	4/15/105 + 2/7/110	96	FT	52-53	2.0024.470.96.75	01	
470	4,40	3,20	75	4/15/105	96	FT	63-65	0024.470.75	01	
480	4,40	3,20	30	NLK + 2/13/94	72	FT	42-51	2.0024.480.72.30	01	
480	4,40	3,20	30	2/13/94	72	FFT	60	0224.480.30	01	
480	4,80	3,50	60	2/11/115 2/19/120	72	FT	158	7124.480.60	03	
480	4,80	3,50	60	2/19/120	72	FT	63-65	0024.480.60	01	
480	4,80	3,50	60	2/19/120	72	TT	82	0020.480.61	03	
480	4,80	3,50	60	2/11/115 + 2/19/120	72	TT	61	0428.480.60	01	
480	4,80	3,50	60	2/19/120	72	WS	82	0020.480.62	03	
480	4,80	3,50	60	2/14/100 + 2/11/115 + 2/19/120 + 2/14/125	72	FT	42-51	2.0024.480.72.60	01	
480	4,80	3,50	70	4/19/120 + 2/9/130 + 4/11/130	72	FT	42-51	2.0024.480.72.70	01	
480	4,80	3,50	80	4/19/120 + 2/9/130 + 4/11/130	72	FT	42-51	2.0024.480.72.80	01	
480	4,80	3,50	80	4/19/120 + 2/9/130	72	FFT	60	0224.480.80	01	
480	4,80	3,50	80	4/19/120 + 2/9/130	72	FT	63-65	0024.480.80	01	
480	4,40	3,20	30		80	FT	63-65	0024.480.30	01	
500	4,40	2,80	30	NLK	24	F, SDB	22	0008.500.30	01	
500	4,40	2,80	30	NLK	44	W, SDB	72	0010.500.30	01	
500	4,40	2,80	30	NLK	60	W	12	0001.500.30	01	
500	4,40	3,20	30		60	FT	63-65	0024.500.29	01	
500	4,40	3,20	30	NLK + 2/13/94	60	FT	52-53	2.0024.500.60.30	01	
500	4,80	3,50	60	2/11/115	60	FT	63-65	0024.500.60	01	
500	4,40	3,20	80		60	W	62	0023.500.80	01	
500	4,40	3,60	30		68	FT	98-99	0040.500.36	01	
500	4,00	2,80	30	NLK	72	W	73	0012.500.30	01	
500	4,40	3,20	30		72	W	62	0023.500.31	01	
500	4,80	3,50	30		72	FT	158	7024.500.30	03	
500	5,00	4,00	30		72	FT	98-99	0040.500.31	01	
500	5,00	4,00	30		72	FT	100	0040.500.34	01	
500	5,20	3,80	30	NLK	72	W	75-76	0014.500.30	01	
500	4,80	3,50	60	2/11/115	72	FFT	60	0224.500.61	01	
500	4,80	3,50	60	2/11/115	72	FT	63-65	0024.500.61	01	
500	4,80	3,50	60	2/14/100 + 2/11/115 + 2/19/120 + 2/14/125	72	FT	42-51	2.0024.500.72.60	01	
500	5,60	3,60	30	2/10/80	84	W	75-76	0014.500.01	01	
500	4,20	3,60	80	6/6,5/100	84	FT	98-99	0040.500.80	01	

Circular saw blades according to diameter

D mm	B mm	b mm	d mm	NL mm	Z	Tooth shape	Catalogue Page	Order No.	PG	Price
500	4,20	3,40	30		96	FT	105	0020.500.31	03	
500	4,80	4,00	30		96	FT	98-99	0040.500.38	01	
500	4,80	3,50	70	6/8/220	96	W	77	0015.500.70	01	
500	5,20	3,80	30	2/10/80 + 2/15/63	100	W	75-76	0014.500.32	01	
500	4,40	3,80	25,4		120	FT	98-99	0040.500.26	01	
500	4,00	3,40	30	2/10,5/70	120	FT	98-99	0040.500.29	01	
500	4,00	3,40	30	2/10,5/70	120	FT	98-99	0140.500.29	01	
500	4,00	3,40	30		120	FT	105	0020.500.30	03	
500	4,40	3,80	30	2/10,5/70	120	FT	98-99	0040.500.30	01	
500	4,40	3,80	30	2/10,5/60	120	FT	102-103	0042.500.30	01	
500	4,80	3,50	30		120	FT	98-99	0040.500.32	01	
500	4,40	3,40	80	6/9/100	120	FT	98-99	0140.500.81	01	
500	3,30	2,80	30	2/10,5/70	140	FT	101	0040.500.40	01	
500	3,30	2,80	30	2/10,5/70	140	FT	104	0042.500.31	01	
500	4,00	2,80	30	2/10/80 + NLK	144	W	77	0015.500.30	01	
500	4,00	3,40	30		144	FT	98-99	0040.501.30	01	
500	4,80	3,50	30	2/10/80 + NLK	144	W	77	0015.500.31	01	
500	3,60	2,80	30	NLK	145	WWF	78	0515.500.30	01	
500	4,80	3,40	30 - 140		24 + 2 + 2	F	15	0004.502.00	01	
500	4,20	2,80	30	NLK	32 + 4	F, SDB	17	0004.500.31	01	
500	5,60	4,00	140		54 + 2 + 2	W	15	0004.500.01	01	
500	5,80	4,00	140		60 + 2 + 2	W	15	0004.500.02	01	
510	4,80	3,50	80	4/19/120 + 2/9/130 + 4/11/130	72	FT	42-51	2.0024.510.72.80	01	
510	4,80	3,50	80	2/9/130 + 4/19/120	72	FT	63-65	0024.510.80	01	
520	4,40	3,20	30	2/13/94	44	W	62	0023.520.30	01	
520	4,40	2,80	30	NLK	60	W	12	0001.520.30	01	
520	4,80	3,50	60	2/11/115 + 2/19/120	60	FT	63-65	0024.520.60	01	
520	4,40	3,20	30	2/13/94	72	FT	63-65	0024.520.30	01	
520	4,80	3,50	30	NLK + 2/13/94	72	FT	42-51	2.0024.520.72.30	01	
520	4,80	3,50	60	2/11/115 + 2/19/120	72	TT	61	0428.520.60	01	
520	4,80	3,50	60	2/14/100 + 2/11/115 + 2/19/120 + 2/14/125	72	FT	42-51	2.0024.520.72.60	01	
520	4,80	3,50	70	4/19/120 + 2/9/130 + 4/11/130	72	FT	42-51	2.0024.520.72.70	01	
520	4,80	3,50	70	4/11/130	72	FT	63-65	0024.520.70	01	
520	4,80	3,50	60	2/11/115 + 2/19/120	84	FT	63-65	0024.520.61	01	
520	4,40	3,80	30		120	FT	98-99	0040.520.30	01	
520	4,40	3,80	30		120	FT	102-103	0042.520.30	01	
530	5,00	3,50	30		60	FT	54-55	2.0024B.530.60.30	01	
530	5,00	3,50	30		60	FT	63-65	0024.530.30	01	
530	5,80	4,00	60	2/11/85	60	FT	63-65	0024.530.60	01	
550	4,80	3,40	30	NLK	44	W	75-76	0014.550.29	01	
550	5,20	3,60	30		60	W	62	0023.550.30	01	
550	5,20	3,60	80		60	W	62	0023.550.80	01	
550	4,80	3,20	30	NLK	72	W	12	0001.550.30	01	
550	5,00	4,00	30		72	FT	98-99	0040.550.32	01	
550	5,00	4,00	30		72	FT	100	0040.550.33	01	
550	5,20	3,80	30	2/10/80	84	W	75-76	0014.550.30	01	
550	5,20	3,80	30	NLK	84	W	75-76	0014.550.31	01	
550	4,40	3,80	30		96	FT	102-103	0042.550.31	01	

Circular saw blades according to diameter

D mm	B mm	b mm	d mm	NL mm	Z	Tooth shape	Catalogue Page	Order No.	PG	Price
550	5,00	4,00	30		96	FT	98-99	0040.550.31	01	
550	5,80	3,80	30	2/10/80	96	W	75-76	0014.550.01	01	
550	4,60	3,60	30		110	FT	98-99	0040.550.29	01	
550	4,40	3,80	30		128	FT	102-103	0042.550.30	01	
550	4,00	3,40	30	2/10,5/70	132	FT	98-99	0040.550.30	01	
550	4,20	3,40	30		132	FT	105	0020.550.30	03	
550	4,80	3,40	30 - 150		24 + 2 + 2 + 2	F	15	0004.550.00	01	
550	5,40	3,60	30	NLK	30 + 2 + 2	F, SDB	17	0004.550.31	01	
555	5,80	5,00	450		19	F	13	0003.555.10	01	
555	6,20	5,00	450		19	F	13	0003.555.11	01	
555	5,20	3,60	55	6/6,6/75	54 + 2 + 2	W	17, 76	0004.555.55	01	
570	4,80	3,50	60	2/14/100 + 2/11/115 + 2/19/120 + 2/14/125	60	FT	54-55	2.0024B.570.60.60	01	
570	4,80	3,50	60	2/19/120	60	FFT	60	0224.570.60	01	
570	4,80	3,50	60	2/19/120	60	FT	63-65	0024.570.60	01	
570	4,80	3,40	30	2/10/80	108	W	75-76	0014.570.30	01	
575	5,90	3,60	30	1/18/90 + 1/18/100	80	W	75-76	0014.575.30	01	
580	5,50	4,00	40	2/13/114 + 2/13/122 + 2/13/140	60	FT	54-55	2.0024B.580.60.40	01	
580	5,50	4,00	40	2/13/122	60	FT	63-65	0024.580.40	01	
600	4,50	3,80	40	2/11/63	60	F, AW	98-99	0040.600.41	01	
600	5,80	4,00	60	2/11/115 2/19/120	60	FT	158	7024.600.60	03	
600	5,80	4,00	60	2/14/100 + 2/11/115 + 2/19/120 + 2/14/125	60	FT	54-55	2.0024B.600.60.60	01	
600	5,80	4,00	60	2/11/115 + 2/19/120	60	FFT	60	0224.600.60	01	
600	5,80	4,00	60	2/11/115 + 2/19/120	60	FT	63-65	0024.600.60	01	
600	5,20	3,60	30	NLK	72	W	12	0001.600.30	01	
600	5,20	3,80	30	2/10/80 + 2/15/63	72	W	75-76	0014.600.30	01	
600	5,80	4,00	60	2/14/100 + 2/11/115 + 2/19/120 + 2/14/125	72	FT	54-55	2.0024B.600.72.60	01	
600	5,80	4,00	60	2/11/115 + 2/19/120	72	FT	63-65	0024.600.61	01	
600	5,80	4,00	60	2/14/100 + 2/11/115 + 2/19/120 + 2/14/125	72	FT	54-55	2.0024B.600.60.80	01	
600	4,00	3,50	40	2/11/63	96	F, AW	98-99	0040.600.42	01	
600	4,80	4,00	40	2/11/63	96	FT	98-99	0040.600.40	01	
600	5,70	4,00	30	2/10/80 + 2/15/63	110	W	75-76	0014.600.33	01	
600	4,60	4,00	30		138	FT	98-99	0040.600.30	01	
600	4,80	4,00	30		138	FT	105	0020.600.30	03	
600	4,60	4,00	30		140	FT	102-103	0042.600.30	01	
600	5,40	4,00	30	2/10/80 + 2/15/63	172	W	75-76	0014.600.32	01	
620	5,20	4,20	40		36	FT	100	0040.620.40	01	
620	5,50	4,50	40	2/13/114 2/13/140	60	FT	98-99	0040.620.41	01	

Circular saw blades according to diameter

D mm	B mm	b mm	d mm	NL mm	Z	Tooth shape	Catalogue Page	Order No.	PG	Price
620	6,20	4,00	40	2/13/114 2/13/140	60	FT	158	7024.620.40	03	
620	6,20	4,20	40	2/13/114 + 2/13/140	60	FT	63-65	0024.620.40	01	
640	5,40	3,60	30	NLK	36 + 2 + 2	F, SDB	17, 76	0004.640.31	01	
650	5,20	4,00	30		60	FT	98-99	0040.650.31	01	
650	5,20	4,00	30		60	FT	100	0040.650.33	01	
650	5,20	4,00	30		72	FT	98-99	0040.650.32	01	
650	5,20	4,00	30		72	FT	100	0040.650.34	01	
650	5,90	4,20	30	2/10/80 + 2/15/63	100	W	75-76	0014.650.30	01	
650	5,00	4,00	30		144	FT	98-99	0040.650.30	01	
670	6,50	5,00	40	2/13/114 + 2/14/140	32	FT	100	0040.670.40	01	
670	5,80	4,20	60	2/19/120 + 2/11/148	48	FT	54-55	2.0024B.670.48.60	01	
670	6,20	4,20	40	2/13/114 + 2/13/140	60	FT	63-65	0024.670.40	01	
680	5,80	4,00	40	2/13/114 2/13/140	60	FT	158	7024.680.42	03	
680	6,20	4,00	40	2/13/114 2/13/140	60	FT	158	7024.680.41	03	
680	6,20	4,20	40	2/13/114 + 2/13/122 + 2/13/140	60	FT	54-55	2.0024B.680.60.40	01	
680	6,20	4,20	80	4/19/120 + 2/9/130 + 4/11/130	60	FT	54-55	2.0024B.680.60.80	01	
700	6,00	4,20	30		60	W	76	0014.700.30	01	
700	7,00	5,00	80	2/17/110	60	FT	54-55	2.0024B.700.60.80	01	
700	7,00	5,00	80	2/17/110 + KS	60	FT	63-65	0024.700.80	01	
700	6,20	4,20	30	2/18/100	84	W	76	0014.700.01	01	
700	6,50	4,40	30		110	W	76	0014.700.02	01	
720	6,40	4,40	40	2/13/114 + 2/13/122 + 2/13/140	60	FT	54-55	2.0024B.720.60.40	01	
720	6,40	4,40	40	2/14/114 + 2/14/140	60	FT	63-65	0024.720.40	01	
720	6,00	4,40	30	2/8,5/90	72	W	76	0014.720.30	01	
730	6,20	4,20	60	2/19/120 + 2/11/148	60	FT	54-55	2.0024B.730.60.60	01	
730	6,20	4,20	60	2/11/148 + 2/19/120	60	FT	63-65	0024.730.60	01	
730	7,00	5,00	80	2/17/110	60	FT	54-55	2.0024B.730.60.80	01	
735	6,00	4,40	30	2/8,5/90	72	W	76	0014.735.30	01	
735	6,00	4,40	30	2/8,5/90	48 + 2 + 2	W, SDB	17, 76	0004.735.30	01	
750	6,80	5,00	30		60	W	76	0014.750.30	01	
750	6,50	4,50	40	2/10,5/60	60	W	76	0014.750.40	01	
750	7,00	4,80	60	2/12,5/240	120	W	76	0014.750.60	01	
750	6,50	4,50	40	2/10,5/60	48 + 2 + 2	W, SDB	17, 76	0004.750.40	01	
760	6,00	4,40	30	4/8,5/90 + 2/14/400	72	W	76	0014.760.30	01	
800	6,00	4,40	30	4/8,5/90 + 2/14/400	80	W	76	0014.800.30	01	
800	7,00	5,00	40		84	W	76	0014.800.40	01	
800	6,00	4,40	30	2/14/400 + 4/8,3/90	48 + 2 + 2 + 2	W	17, 76	0004.800.30	01	

DP Tools

Content

DP Tools

Products | Page

DP circular saw blade for multi rip saws 154

DP universal circular saw blade 155

DP universal Plus circular saw blade. 156

DP circular saw blade for wood-based material 157

DP circular panel sizing saw blade 158

DP circular scoring saw blade 159-161

DP circular saw blade SuperSilent 162-166

DP scoring saw blade SuperSilent 167

DP spare circular saw blade 168-169

DP shank type cutter 170-180

DP jointing-rebating cutter 181-182

DP nesting cutter 183

DP jointing cutter 184-187

DP radii trimming cutter 188

DP multiple radii trimming cutter 189

DP bevel cutter 190

DP trimming cutter 191

DP compact hogger 192

DP circular saw blade for multi rip saws
for laminate material

Please indicate the kerf, bore diameter and tooth shape of your required tool in order to determine the design.

We are pleased to assist you designing the tool.

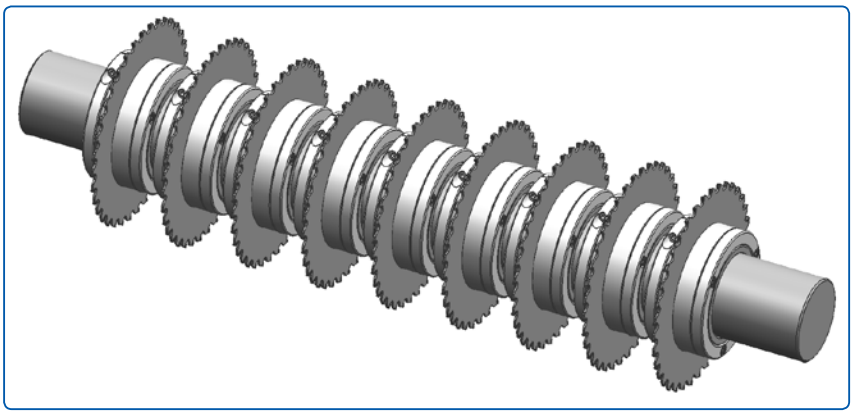

Tooth shape to your choice:
Flat - triple-chip tooth (FT)
Flat tooth (F)
Triple-chip tooth (T)
Alternate top bevel tooth (W)

Optionally: We offer a suitable coating for your field of application, e.g. PLT- coated (wear- resistant, protection against premature warming) at an extra charge.

Application examples:

D mm	B mm	b mm	d mm	d max mm	Z
210	2,20 - 2,40	1,6	30	120	36
210	2,20 - 2,40	1,6	30	120	48
210	2,20 - 2,40	1,6	30	120	54
250	2,20 - 2,40	1,6	30	120	36
250	2,20- 2,40	1,6	30	120	48
250	2,20 - 2,40	1,6	30	120	54
250	2,80 - 3,30	2,0	30	120	36
250	2,80 - 3,30	2,0	30	120	48
250	2,80 - 3,30	2,0	30	120	54
300	2,80 - 3,30	2,2	30	120	48
300	2,80 - 3,30	2,2	30	120	54

7014 / 7015 DP universal circular saw blade

Longitudinal and cross cut

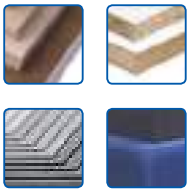

Application:	For universal application
Material:	Wood-based material, raw and one-side coated, paper based laminate, thermoplastic material
Machine:	Sizing saw, cross cut saw
Design:	Rigid saw body; • = with copper plugs
Tooth:	Flat tooth (F), Alternate top bevel tooth (W), Alternate top bevel tooth with axial angle (W, AW), DP

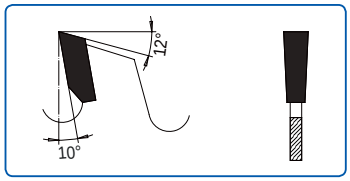

Fig.: Flat tooth (F)

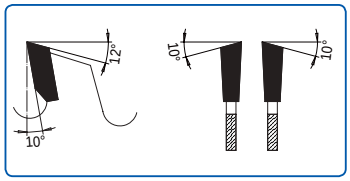

Fig.: Alternate top bevel tooth (W)

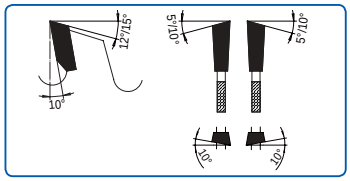

Fig.: Alternate top bevel tooth (W, AW)

	D mm	B mm	b mm	d mm	NL mm	BH mm	Z	Tooth shape	LZ	Order No.	Price [PG 03]
•	180	3,20	2,20	30		5,0	36	F	◊	7015.180.31	
•	180	3,20	2,20	30		5,0	36	W		7015.180.30	
•	180	3,20	2,20	30		5,0	54	F	◊	7015.180.36	
•	180	3,20	2,20	30		5,0	54	W		7015.180.35	
•	250	3,20	2,20	30		5,0	48	W	◊	7014.250.30	
•	250	3,20	2,20	30	NLK	5,0	60	W, AW	◊	7014.250.007	
•	250	3,20	2,20	30		4,0	72	W		7015.250.31	
•	303	3,20	2,20	30	NLK	5,0	48	W	◊	7014.303.25	
•	303	3,20	2,20	30	NLK	5,0	60	W	◊	7014.303.33	
TOP •	303	3,20	2,20	30	NLK	4,0	72	W, AW		7014.303.31	
•	303	3,20	2,20	30	NLK	5,0	72	W	◊	7014.303.34	
•	303	3,20	2,20	30	NLK	4,0	96	W, AW	◊	7015.303.30	
•	350	3,50	2,40	30	NLK	4,0	72	W		7014.350.31	
•	350	3,50	2,40	30	NLK	4,0	108	W	◊	7015.350.30	

7515 DP Universal Plus

The improved universal circular saw blade for cross cuts and mitre cuts

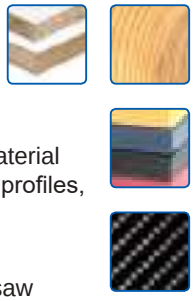

Application:	Sizing of wood-based material in finish-cut quality
Material:	Laminated wood-based material including material with very thick top layers, solid wood, plastic profiles, plastic coated ledges
Machine:	Vertical panel sizing saw, sizing saw, CNC resp. machining centres, double mitre saw
Design:	Reduced kerf; low noise due to specific laser ornaments • = with copper plugs
Tooth:	Alternate top bevel tooth with axial angle - Alternate top bevel tooth with axial angle - Flat tooth (WWF), DP

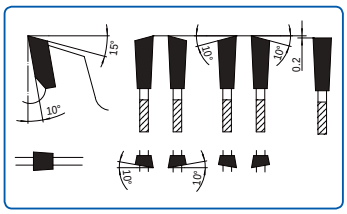

	D mm	B mm	b mm	d mm	NL mm	BH mm	Z	Tooth shape	Order No.	Price [PG 03]
•	303	3,00	2,20	30	NLK	3,50	100	WWF	7515.303.30	
•	303	3,20	2,20	30	NLK	3,50	100	WWF	7515.303.31	
•	350	3,20	2,20	30	NLK	3,50	100	WWF	7515.350.30	

7021 DP circular saw blade for wood-based material

Sizing. For longest service life

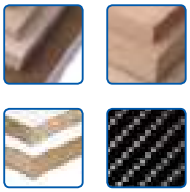

Application:	Longitudinal and cross-cut
Material:	Wood-based material, raw and coated, duroplastic material
Machine:	Panel sizing unit with scoring aggregate
Design:	Rigid saw body; • = with copper plugs
Tooth:	Triple-chip flat tooth (FT), DP

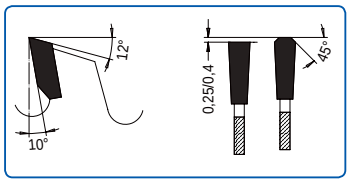

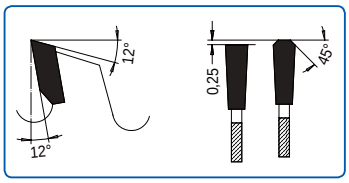

	D mm	B mm	b mm	d mm	NL mm	BH mm	Z	Tooth shape	Order No.	Price [PG 03]
•	250	3,20	2,20	30	NLK	5,0	48	FT	7021.250.30	
•	250	3,20	2,20	30	NLK	5,0	60	FT	7021.250.31	
TOP •	300	3,20	2,20	30	NLK	4,0	96	FT	7021.300.30	
•	303	3,20	2,20	30	NLK	5,0	48	FT	7021.303.25	
•	303	3,20	2,20	30	NLK	5,0	60	FT	7021.303.31	
•	303	3,20	2,20	30	NLK	5,0	72	FT	7021.304.38	
•	350	3,50	2,40	30	NLK	4,0	96	FT	7021.350.30	

7024 DP circular panel sizing saw blade

For longest service life

Application:	Panel sizing, single and in packs
Material:	Wood-based material, laminated, duroplastic material
Machine:	Panel sizing unit, horizontal, with scoring aggregate
Design:	Rigid saw body; • = with copper plugs; ♪= Soundstar
Tooth:	Triple-chip flat tooth (FT), DP

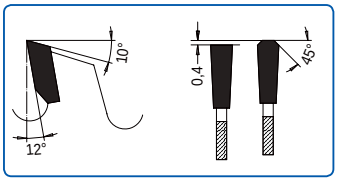

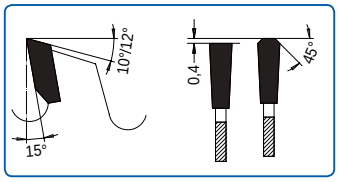

	D mm	B mm	b mm	d mm	NL mm	Machine	BH mm	Z	Tooth shape	LZ	Order No.	Price [PG 03]
•	305	4,40	3,00	30			5,0	60	FT		7024.305.37	
•	350	4,40	3,00	30	2/10/60	Mayer, Holz-Her Schelling	5,0	72	FT		7024.350.05	
•	350	4,40	3,20	30			5,0	84	FT		7024.350.30	
•	380	4,40	3,20	30		Holz-Her	5,0	72	FT		7024.380.30	
•	380	4,40	3,20	60	2/14/100	Homag	5,0	72	FT		7024.380.13	
TOP •	380	4,80	3,50	60	2/14/100	Homag	5,0	72	FT		7024.380.66	
•	400	4,40	3,20	30			5,0	72	FT		7024.400.08	
•	430	4,40	3,20	80	4/19/120 2/9/130	Biesse Selco	5,0	72	FT	◊	7024.430.05	
•	450	4,80	3,50	30			5,0	72	FT		7024.450.30	
TOP •	450	4,80	3,50	60	2/19/120 2/14/125	Homag	5,0	72	FT		7024.450.62	
♪ •	480	4,80	3,50	60	2/11/115 2/19/120	Homag	5,0	72	FT		7124.480.60	
•	500	4,80	3,50	30			5,0	72	FT	◊	7024.500.30	
•	600	5,80	4,00	60	2/11/115 2/19/120	Homag	6,5	60	FT	◊	7024.600.60	
•	620	6,20	4,00	40	2/13/114 2/13/140	Schelling	6,5	60	FT	◊	7024.620.40	
•	680	5,80	4,00	40	2/13/114 2/13/140	Schelling	6,5	60	FT	◊	7024.680.42	
•	680	6,20	4,00	40	2/13/114 2/13/140	Schelling	6,5	60	FT	◊	7024.680.41	

7026 DP circular scoring saw blade

Scoring of wood-based material. For longest service life

Application:	Scoring of coated wood-based material, parallel feed, bottom up
Material:	Plastic laminated and film-coated wood-based material
Machine:	Panel sizing unit with scoring aggregate, trimming saw with scoring aggregate
Design:	Conical flat tooth DP, for high feed rates and long service life; • = with copper plugs
Tooth:	Flat tooth (F), Flat tooth conical (F, con.), alternate top bevel tooth conical (W, con.), DP

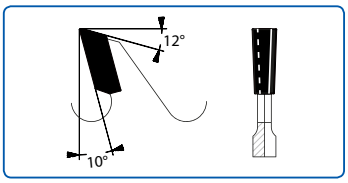

Fig.: Flat tooth (F), two-piece design

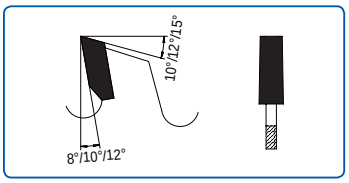

Fig.: Flat tooth conical (F, con.)

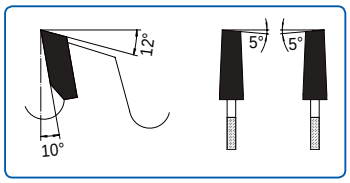

Fig.: Alternate top bevel tooth, conical (W, con.)

	D mm	B mm	b mm	d mm	NL mm	Machine	BH mm	Z	Tooth shape	Order No.	Price [PG 03]
	80	2,8-3,6	4,00	20		Felder, Striebig	5,0	10 + 10	F	7026.080.20	
TOP	120	2,8-3,6	4,00	20		Holzher, SCM	5,0	12 + 12	F	7026.120.20	
TOP	120	2,8-3,6	4,40	50		Altendorf-Rapido	5,0	12 + 12	F	7026.120.50	
TOP	120	2,8-3,8	4,00	22		Altendorf	5,0	12 + 12	F	7026.120.02	
	125	2,8-3,6	4,00	20		Paoloni	5,0	12 + 12	F	7026.125.23	
	125	3,1-3,9	2,20	20		Panhans	5,0	24	F con.	7026.125.25	
•	125	4,4-5,2	3,40	20		Giben, Gabbiani, Panhans	5,0	24	F con.	7026.125.21	
NEW	125	4,4-5,2	3,20	45		Homag España CH 03	5,0	24	F con.	7026.125.45	
	127	4,4-5,2	3,40	45		Giben	5,0	24	W con.	7026.127.01	
	150	3,3-4,1	2,20	45		Homag 130	5,0	28	F con.	7026.150.45	
TOP	150	3,7-4,5	2,80	30		Mayer PS 80	5,0	28	F con.	7026.150.30	
•	150	4,4-5,2	3,20	30		Mayer	5,0	28	F con.	7026.150.13	
NEW	150	4,4-5,2	3,40	45		Homag 130	5,0	28	F con.	7026.150.46	
NEW	160	4,4-5,2	3,20	45	3/11/70	Giben Starmatic 850	5,0	28	F con.	7026.160.45	
NEW	160	4,4-5,2	3,20	55	3/7/66	SCM Gabbiani P 55, SCM Sigma Prima 50	5,0	36	F con.	7026.160.55	
	180	3,3-4,1	2,20	30	NLK	Panhans Eco	5,0	28	F con.	7026.180.30	
NEW	180	3,7-4,5	2,80	30	NLK	Holz-Her, Panhans, Schelling	5,0	28	F con.	7026.180.36	

7026 DP circular scoring saw blade

Scoring of wood-based material. For longest service life

	D mm	B mm	b mm	d mm	NL mm	Machine	BH mm	Z	Tooth shape	Order No.	Price [PG 03]
TOP	180	3,7-4,5	2,80	45		Homag HP./HKL 300	5,0	36	F con.	7026.181.45	
•	180	4,4-5,2	3,20	20		Anthon, Panhans Schelling	5,0	32	W con.	7026.180.21	
•	180	4,4-5,2	3,20	30	NLK	Panhans	5,0	28	F con.	7026.180.17	
•	180	4,4-5,2	3,20	45		Homag	5,0	32	F con.	7026.180.44	
NEW	180	4,4-5,2	3,20	50	3/13/80	Giben Smart & Onix	5,0	42	F con.	7026.180.50	
TOP •	180	4,8-5,6	3,50	45		Homag	5,0	32	F con.	7026.180.46	
TOP	190	3,7-4,5	2,80	50	2/7/80	Giben	5,0	32	F con.	7026.190.50	
NEW	190	4,4-5,2	3,20	50	2/7/80	Giben	5,0	32	F con.	7026.190.52	
	200	3,3-4,1	2,20	45		Homag 230	5,0	36	F con.	7026.200.45	
TOP	200	3,7-4,5	2,80	20	2/11/66	Schelling FH4, Panhans	5,0	36	F con.	7026.200.21	
NEW	200	3,7-4,5	2,80	30	2/8,5/60	Scheer PA 5500 & PA6000	5,0	36	F con.	7026.201.30	
NEW	200	3,7-4,5	2,80	45		Homag SAWTEQ B-200 (HPP 200)	5,0	36	F con.	7026.201.46	
	200	3,7-4,5	2,80	65	2/9/100 2/9/110	Biesse Selco	5,0	32	F con.	7026.201.65	
NEW	200	4,1-4,9	3,00	65	2/9/100 2/9/110	Biesse Selco WN630/650	5,0	32	F con.	7026.201.66	
•	200	4,4-5,2	3,40	20	2/11/66	Schelling	5,0	24	F con.	7026.200.24	
•	200	4,4-5,2	3,40	20	2/11/66	Schelling	5,0	32	F con.	7026.200.20	
•	200	4,4-5,2	3,50	30	2/8,5/60	Scheer	5,0	36	F con.	7026.200.26	
•	200	4,4-5,2	3,50	45		Homag SAWTEQ B-200 (HPP 200)	5,0	32	F con.	7026.200.51	
NEW	200	4,4-5,2	3,20	50	3/13/80	Giben Smart	5,0	42	F con.	7026.201.50	
•	200	4,4-5,2	3,50	65	2/9/100 2/9/110	Biesse Selco	5,0	32	F con.	7026.200.67	
•	200	4,4-5,2	3,20	80	2/14/110	Gabbiani, SCM	5,0	32	F con.	7026.200.83	
TOP •	200	4,8-5,6	3,50	45		Homag	5,0	32	F con.	7026.200.46	
•	200	4,8-5,6	3,50	65	2/9/100 2/9/110	Biesse Selco	5,0	32	F con.	7026.200.68	
NEW	200	5,0-5,8	3,50	20	2/11/66	Schelling fh8 & ah8 & ch8	5,0	32	F con.	7026.200.22	

7026 DP circular scoring saw blade

Scoring of wood-based material. For longest service life

	D mm	B mm	b mm	d mm	NL mm	Machine	BH mm	Z	Tooth shape	Order No.	Price [PG 03]
NEW	200	5,5-6,4	4,00	20	2/11/66	Schelling AT & FT & AS & FS	5,0	32	F con.	7026.200.23	
•	200	5,8-6,6	4,50	45		Homag	5,0	32	F con.	7026.200.47	
NEW	200	6,2-7,0	4,20	20	2/11/66	Schelling AS & FS	5,0	32	F con.	7026.200.25	
NEW	200	6,2-7,0	4,20	45		Homag Type 66	5,0	32	F con.	7026.200.48	
NEW	200	7,0-7,8	5,00	20	2/9/60	Anthon LNC	5,0	32	F con.	7026.200.27	
NEW	215	3,7-4,5	2,80	50	2/7/80	Giben	5,0	32	F con.	7026.215.53	
NEW	215	4,4-5,2	3,20	50	2/7/80 3/15/80	Giben	5,0	42	F con.	7026.215.50	
NEW	215	4,8-5,6	3,50	50	2/7/80	Giben Prismatic 3 & Tetramatic	5,0	42	F con.	7026.215.51	
NEW	220	6,4-7,2	4,40	20		Schelling AS & FS	5,0	32	F con.	7026.220.20	
NEW	300	3,7-4,5	3,20	30	2/11/73 2/13/94	Schelling fh4 alt & fk4 alt & FM	5,0	32	F con.	7026.300.33	
NEW	300	4,4-5,2	3,20	30	2/11/73 2/13/94	Schelling fh4 alt & fk4 alt & FM	5,0	32	F con.	7026.300.30	

HEARING

- If the noise level is reduced by 20 dB this means that the volume will go down by 75%, the sound pressure even by 90% and the sound intensity by 99%
- With idle running and no disturbing periphery a level of less than 75 dB(A) can be achieved

FEELING

New standards in terms of safety at work thanks to patented MicroGeo® technology:

- There is hardly any cutting pressure: “You are sawing as if through butter”
- Almost no rebound during work, flying material parts are a thing of the past
- Effortless sawing of extremely thin ledges
- Despite the very sharp cut hardly any danger of injury when handling the tool

SEEING

- The SuperSilent is THE universal tool that lives up to its name
- It cuts simply all wood-based material such as chip board, MDF or plywood continuously. Even so, if coated on both sides
- Especially planed dry solid wood can be processed in unprecedented quality with longitudinal cuts and cross cuts
- Even abrasive material such as laminate does not pose any obstacle for this tool

MARVELING

- The high-quality diamond cutting material ensures a long tool life and excellent cutting results – at remarkably low costs per cut
- Moreover, down-times for laborious tool changes and investing in a full range of circular saw blades is no longer necessary
- Even tedious fine adjustments of the scoring blades are a thing of the past

The SuperSilent versions by comparison

„Select“ & „Universal“

	The SuperSilent versions by comparison	
Performance with ...	**SuperSilent 2 Select**	**SuperSilent 3 Universal**
Sizing of large panels	o	++
Processing high-strain types of material	o	++
Finish cut quality*	++	++
Planing cut quality**	+++	+
Mitre cuts	++	++
Others ...	**SuperSilent 2 Select**	**SuperSilent 3 Universal**
Regular sharpening cycles	1x	**2x**
Noise reduction***	+++	+++
Material savings***	+++	++
Machine precision requirements	heightened	**normal**
Accuracy requirements in action	heightened	**normal**

* Depending on the material possibly with scorer
** Requires a low-vibration and serviced machine and peripheral equipment
*** Compared to standard circular saw blades

7821 *SuperSilent 2 Select*

» Cutting 2.0

For precise cuts in low-strain types of material.
Planing cut quality possible. Extremely high material savings.

Your benefits at a glance:

- Universal: processing of wood and wood-based materials
- Brilliant cutting result
- Planing cut quality with solid wood
- 75% quieter than standard circular saw blades
- Extremely economical by means of 1 time resharpenable
- Maximum material utilisation due to 2,0 mm kerf

Application:	Longitudinal cut, cross cut, planing cut
Material:	Wood-based material raw and coated, planed dry solid wood
Machine:	Sizing circular saws with scoring aggregate
Design:	ChipBelt®, safe@work®, low noise, reduced cutting pressure
Tooth:	MicroGeo®, Direct-Chip-Guide®-Design, DP

Main saw blade

	D mm	B mm	b mm	d mm	NL mm	Z	Order No.	Price
TOP	303	2,00	1,80	30	2/7/42 2/9/46,5 2/10/60	43	7821.303.30	

7821 *SuperSilent 3* Universal

» Cutting 2.0

For first-class cutting results even in high-strain types of material.
Particularly suitable for sizing large panels.

Your benefits at a glance:

- Universal: processing of wood and wood-based materials
- Sizing of large panels much easier
- Improved processing of high-strain types of material
- Well-known brilliant cutting quality
- Incredibly economical: 2 times resharpenable
- Advanced tooth geometry
- 75% quieter than standard circular saw blades
- Comfortable: Lower requirement on machine alignment

Application:	Longitudinal cut, cross cut, planing cut
Material:	Wood-based material raw and coated, planed dry solid wood
Machine:	Sizing circular saws with scoring aggregate
Design:	ChipBelt®, safe@work®, low-noise, reduced cutting pressure
Tooth:	MicroGeo®, Direct-Chip-Guide®-Design, DP

Main saw blade

	D mm	B mm	b mm	d mm	NL mm	Z	Order No.	Price
TOP	300	2,40	1,80	30	2/7/42 2/9/46,5 2/10/60	43	7821.300.43.30-B24	
TOP	350	2,60	2,00	30	2/7/42 2/9/46,5 2/10/60	53	7821.350.53.30-B26	

7825 *SuperSilent* for vertical panel sizing machines

» Cutting 2.0

Your benefits at a glance:

- Optimised especially for vertical panel sizing machines
- Brilliant cutting result
- 75% quieter than standard circular saw blades
- Universal: processing of wood and wood-based materials
- Suitable for sizing large panels
- Cutting result without any burning marks possible – even with larger cutting heights
- Can optionally be combined with SuperSilent scoring blade
- Extremely efficient: 2 times resharpenable, thus long tool life
- Incredibly favourable operating costs

Application:	Longitudinal cut, cross cut
Material:	Wood-based material raw and coated, planed dry solid wood
Machine:	Vertical panel sizing machines
Design:	ChipBelt®, safe@work®, low noise, reduced cutting pressure
Tooth:	MicroGeo®, Direct-Chip-Guide®-Design, DP

	D mm	B mm	b mm	d mm	NL mm	Z	Order No.	Price
NEW TOP	250	2,40	1,80	30	2/7/42 2/9/46,5 2/10/60	43	7825.303.43.30	
TOP	303	2,40	1,80	30	2/7/42 2/9/46,5 2/10/60	43	7825.303.43.30	

7826 | *SuperSilent* scoring programme

» Cutting 2.0

1-piece scorer

Conical ATB tooth with MicroGeo®-design

Same functional principle as with a SuperSilent main saw blade

For *SuperSilent 2* - Select

	D mm	B mm	B_2 mm	b mm	d mm	Machines	Z	Order No.	Price
TOP	80	2,00	2,40	1,80	20	Felder	12	7826.080.12.20-B24	
TOP	100	2,00	2,40	1,80	20	Martin, Panhans, Schelling	16	7826.100.16.20-B24	
TOP	100	2,00	2,40	1,80	22	Altendorf, Panhans, Robland, SCM	16	7826.100.16.22-B24	
TOP	120	2,00	2,40	1,80	20	Holz-Her, SCM, MAKA	20	7826.120.20.20-B24	
TOP	120	2,00	2,40	1,80	22	Altendorf, Martin	20	7826.120.20.22-B24	
TOP	125	2,00	2,40	1,80	20	Panhans, Paoloni	20	7826.125.20.20-B24	
TOP	125	2,00	2,40	1,80	22	Altendorf, Martin	20	7826.125.20.22-B24	

For *SuperSilent 3* - Universal and for *SuperSilent* Type 7825

	D mm	B mm	B_2 mm	b mm	d mm	Machines	Z	Order No.	Price
TOP	80	2,40	2,80	1,80	20	Felder	12	7826.080.12.20-B28	
TOP	100	2,40	2,80	1,80	20	Martin, Panhans, Schelling	16	7826.100.16.20-B28	
TOP	100	2,40	2,80	1,80	22	Altendorf, Panhans, Robland, SCM	16	7826.100.16.22-B28	
TOP	120	2,40	2,80	1,80	20	Holz-Her, SCM, MAKA	20	7826.120.20.20-B28	
TOP	120	2,40	2,80	1,80	22	Altendorf, Martin	20	7826.120.20.22-B28	
TOP	125	2,40	2,80	1,80	20	Panhans, Paoloni	20	7826.125.20.20-B28	
TOP	125	2,40	2,80	1,80	22	Altendorf, Martin	20	7826.125.20.22-B28	

Please Note: Everything about ***SuperSilent***, e.g. explanations concerning the functional principal, our FAQ or the suitable accessories (such as riving knife, spacer or reducing ring) is available under: **www.ake.de**.

Our topical ***SuperSilent***-further developments as well as the current brochures are available for download as well.

7032 | DP spare circular saw blade for hogger
7033 | Suitable for AKE Vario hogger

Application:	For sizing wood-based material. Hogging of residual timber on multi-rip saw without flange sleeve
Material:	Panel material raw and coated
Machine:	Double-end profiler, multi-rip saw
Design:	DP saw blade (flat tooth) with axial angle, for improved chip removal
Tooth:	Flat tooth with axial angle (F, AW), DP

Vario hogger
Type 7033

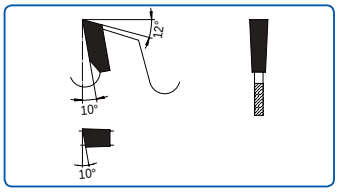

Fig.: Flat tooth with axial angle (F, AW)
7032 Fine-cut saw blade

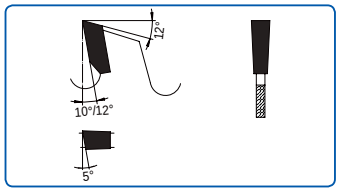

Fig.: Flat tooth with axial angle (F, AW)
7033 Saw blade for hogger

DP fine-cutting saw blade [7032] for AKE Vario hogger [7033]

10.5 mm countersunk (lhs = top counter CW, rhs = top CW)

D mm	B mm	b mm	d mm	NL mm	Rhs/ Lhs	BH mm	Z	Tooth shape	Order No.	Price [PG 03]
255	4,30	2,80	80	12/5,5/190	lhs	5,0	36	F, AW	7032.255.87	
255	4,30	2,80	80	12/5,5/190	rhs	5,0	36	F, AW	7032.255.86	
255	4,30	2,80	80	12/6/190	lhs	5,0	48	F, AW	7032.255.81	
255	4,30	2,80	80	12/6/190	rhs	5,0	48	F, AW	7032.255.82	
255	4,30	2,80	80	12/6/190	lhs	5,0	60	F, AW	7032.255.83	
255	4,30	2,80	80	12/6/190	rhs	5,0	60	F, AW	7032.255.84	

DP saw blade for hogger [7033] for AKE Vario hogger [7033]

D mm	B mm	b mm	d mm	NL mm	Rhs/ Lhs	BH mm	Z	Tooth shape	Order No.	Price [PG 03]
250	5,50	5,00	80	12/6/190	lhs	5,0	12	F, AW	7033.250.81	
250	5,50	5,00	80	12/6/190	rhs	5,0	12	F, AW	7033.250.82	
255	6,00	5,00	80	12/6/190	lhs	5,0	6	F, AW	7033.255.83	
255	6,00	5,00	80	12/6/190	rhs	5,0	6	F, AW	7033.255.84	
260	5,00	4,00	80	12/6/190	lhs	5,0	6	F, AW	7033.260.85	
260	5,00	4,00	80	12/6/190	rhs	5,0	6	F, AW	7033.260.86	

7032 DP spare circular saw blade for hogger

Suitable for saw blade segment hogger

Compatible:	Leuco • = also suitable for AKE-system
Application:	For sizing panel material with scoring aggregate, hogging and double-hogging
Material:	Panel material raw and veneered
Machine:	Double-end profiler and edge bander
Design:	DP saw blade (flat tooth) with axial angle for improved chip removal
Tooth:	Flat tooth with axial angle (F, AW), DP

Saw blade segment hogger type 0033

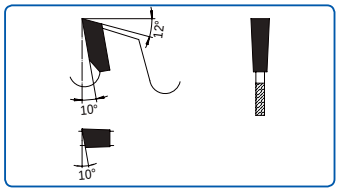

Fig.: Flat tooth with axial angle (F, AW) 7032 Fine-cut saw blade

Fig.: Spare HW segment. Suitable for saw blade segment hogger

DP fine-cut saw blade [7032] for saw blade segment hogger [7033]

10.5 mm countersunk (lhs = top counter CW, rhs = top CW)

	D mm	B mm	b mm	d mm	NL mm	Rhs / Lhs	BH mm	Z	Tooth shape	LZ	Order No.	Price [PG 03]
•	250	4,00	2,80	80	6/6,5/200 6/16/188	lhs	5,0	36	F, AW		7032.250.07	
•	250	4,00	2,80	80	6/6,5/200 6/16/188	rhs	5,0	36	F, AW		7032.250.08	
•	250	4,00	2,80	80	6/6/200 6/16/188	lhs	5,0	54/48	F, AW		7032.250.09	
•	250	4,00	2,80	80	6/6/200 6/16/188	rhs	5,0	54/48	F, AW		7032.250.11	
•	250	4,00	2,80	80	6/6,5/200 6/16/188	lhs	5,0	66/60	F, AW	◊	7032.250.21	
•	250	4,00	2,80	80	6/6,5/200 6/16/188	rhs	5,0	66/60	F, AW	◊	7032.250.22	
•	250	4,00	2,80	80	6/6/200 6/16/188	lhs	5,0	78/72	F, AW	◊	7032.250.23	
•	250	4,00	2,80	80	6/6/200 6/16/188	rhs	5,0	78/72	F, AW	◊	7032.250.24	

Spare HW segment for saw blade segment hogger

	D mm	Z	Tooth shape	Rhs / Lhs	Order No.	Price [PG 01]
•	200	4	F		0452.000.04	
☐ •	200/250	4	F AW	lhs	0452.002.04	
☐ •	200/250	4	F AW	rhs	0452.001.04	
	250	4	F		0452.000.07	
☐	250	4	unground	lhs	0452.012.04	
☐	250	4	unground	rhs	0452.011.04	
	300	8	F	lhs	0453.002.08	
	300	8	F	rhs	0453.001.08	
	300	10	F	lhs	0453.002.20	
	300	10	F	rhs	0453.001.20	
	350/430	8	F	lhs	0453.502.08	
	350/430	8	F	rhs	0453.501.08	
	350/430	10	F	lhs	0453.502.10	
	350/430	10	F	rhs	0453.501.10	

43020 DP shank cutter Z1 - *blackline*

with DP boring tip

Your benefits at a glance:

- DP-boring tip for added tool life with grooving and drilling
- Larger DP tip height for more cutting meters and one additional re-grinding cycle
- More rigid tool body already from small diameters of 8 mm, thus very break-proof

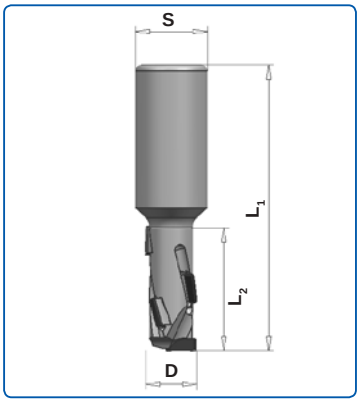

Application:	For sizing, grooving, jointing, rebating to be applied with collet chuck
Material:	Panel material with and without coating; duroplastic plastic
Machine:	Stationary machines with and without tool changer
Design:	DP knives with axial angle and divided cut; shank 16 and 25 with internal thread
Tooth:	DP, Ø 8 - 12,7 mm tip height 2,5 mm; from Ø 16 mm tip height 3 mm

	D mm	L2 mm	L1 mm	Shank mm	Z	Rhs/Lhs	Order No.	Price [PG 03]
	8	25	70	12	1+1	rhs	10211512	
	8	25	70	12	1+1	lhs	10218600	
	10	25	70	12	1+1	rhs	10212872	
	10	25	70	12	1+1	lhs	10218601	
	12	28	75	12	1+1	rhs	10212880	
	12	28	75	12	1+1	lhs	10218602	
NEW	12,7	22	75	12,7	1+1	rhs	10218764	
NEW	12,7	22	75	12,7	1+1	lhs	10218765	
NEW	12,7	28	75	12,7	1+1	rhs	10218766	
NEW	12,7	28	75	12,7	1+1	lhs	10218767	
NEW	16	22	100	16	1+1	rhs	10218762	
NEW	16	22	100	16	1+1	lhs	10218763	
	16	28	90	16	1+1	rhs	10216451	
	16	28	90	16	1+1	lhs	10218603	
	16	34	95	16	1+1	rhs	10211936	
	16	34	95	16	1+1	lhs	10218604	
	18	28	90	25	1+1	rhs	10218605	
	18	28	90	25	1+1	lhs	10218606	
	18	34	95	25	1+1	rhs	10218607	
	18	34	95	25	1+1	lhs	10218608	
NEW	18	43	100	20	1+1	rhs	10216339	
NEW	18	43	100	20	1+1	lhs	10216341	
	18	43	100	25	1+1	rhs	10211219	
	18	43	100	25	1+1	lhs	10218609	
	20	28	90	25	1+1	rhs	10218610	
NEW	20	28	90	25	1+1	lhs	10218611	
	20	52	110	25	1+1	rhs	10215150	
NEW	20	52	110	25	1+1	lhs	10218612	

43020 DP shank cutter Z2 - *blackline*
with DP boring tip

Your benefits at a glance:

- DP-boring tip for added tool life with grooving and drilling
- Larger DP tip height for more cutting meters and one additional re-grinding cycle
- More rigid tool body, thus very break-proof

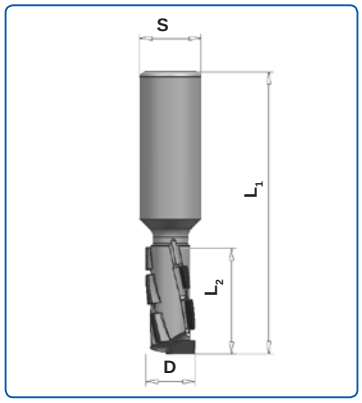

Application:	For sizing, grooving, jointing, rebating very precise shank tolerances; suitable for shrink clamping
Material:	Panel material with and without coating; duroplastic plastic
Machine:	Stationary machines with and without tool changer
Design:	DP knives with axial angle and divided cut; shank with internal thread
Tooth:	DP, tip height 3 mm

	D mm	L2 mm	L1 mm	Shank mm	Z	Rhs/Lhs	Order No.	Price [PG 03]
NEW	16	28	100	16	2+1	rhs	10221490	
NEW	16	28	100	16	2+1	lhs	10221682	
	16	28	100	25	2+1	rhs	10182761	
	16	28	100	25	2+1	lhs	10182762	
	16	34	105	25	2+1	rhs	10182763	
	16	34	105	25	2+1	lhs	10182764	
NEW	20	28	90	20	2+1	rhs	10220325	
NEW	20	28	90	20	2+1	lhs	10220326	
	20	28	100	25	2+1	rhs	10182765	
	20	28	100	25	2+1	lhs	10182766	
NEW	20	34	90	20	2+1	rhs	10220327	
NEW	20	34	90	20	2+1	lhs	10220328	
	20	34	105	25	2+1	rhs	10182767	
	20	34	105	25	2+1	lhs	10182768	
	20	43	115	25	2+1	rhs	10182769	
	20	43	115	25	2+1	lhs	10182770	
	20	52	125	25	2+1	rhs	10182771	
	20	52	125	25	2+1	lhs	10182772	
NEW	20	72	115	20	2+1	rhs	10220329	
NEW	20	72	115	20	2+1	lhs	10220330	

DP shank cutter Z1 and Z2 *Harmony*

» Cutting 2.0

TOP

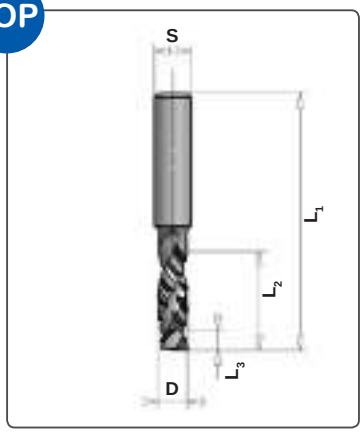

Your benefits at a glance:

- Tear-free edges on the top coat
- No tearing with transverse edge banding
- No multiple machining
- Ideally suitable for zero joint gaps and laser edge banding technology
- Extremely long tool life
- Large variety of materials

Application:	For sizing, grooving and jointing of wood-based panel material, both with and without coating; especially suitable for chip board with low density and front-end processing of solid wood; very precise shank tolerances; thus suitable for shrink clamping (recommended) suitable for plunge cutting and circular (helix) drilling
Material:	Panel material with and without coating
Machine:	Stationary machines with and without tool changer
Design:	Ø 6 - 12,7 mm tool body of solid carbide Ø 16 – 25 mm tool body of steel DP knives with extremely large axial angle with Up-cut and Down-cut design; for the production of tear-free jointing edges asymmetrically positioned knives suitable for rebates of up to 5 mm height
Tooth:	DP L3* = Up-cut

D mm	L1 mm	L2 mm	L3* mm	Shank mm	Rhs/ Lhs	Z	LZ	Order No.	Price [PG 03]
6	64	11	3,6	8	rhs	1	◊	10201796	
6	64	15	4,1	8	rhs	1		10201768	
6	64	17	4,1	8	rhs	1	◊	10201797	
8	70	11	2,5	10	rhs	1	◊	10201767	
8	70	17	4,0	10	rhs	1		10201794	
8	70	27	4,0	10	rhs	1		10201795	
10	80	11	3,7	12	rhs	1	◊	10201765	
10	80	17	3,0	12	rhs	1		10201793	
10	80	33	4,8	12	rhs	1		10201766	
12	80	11	1,8	12	rhs	1	◊	10201761	
12	80	17	4,0	12	rhs	1		10201762	
12	80	27	4,0	12	rhs	1	◊	10201763	
12	80	37	4,0	12	rhs	1		10201764	
12	80	11	2,2	12	rhs	2	◊	10201754	
12	80	17	2,2	12	rhs	2		10201792	
12	80	27	2,2	12	rhs	2	◊	10201755	
12	80	37	2,2	12	rhs	2		10201756	
12,7	80	11	2,3	12,7	rhs	2	◊	10201757	
12,7	80	17	2,2	12,7	rhs	2	◊	10201758	
12,7	80	27	2,2	12,7	rhs	2	◊	10201759	
12,7	80	37	2,2	12,7	rhs	2	◊	10201760	

DP shank cutter Z2

» Cutting 2.0

TOP

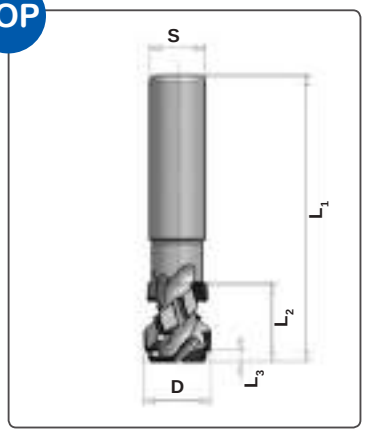

Your benefits at a glance:

- Tear-free edges on the top coat
- No tearing with transverse edge banding
- No multiple machining
- Ideally suitable for zero joint gaps and laser edge banding technology
- Extremely long tool life
- Large variety of materials

Application:	For sizing, grooving, jointing, rebating; very precise shank tolerances, therefore suitable for shrink clamping (recommended)
Material:	Panel material with and without coating
Machine:	Stationary machines with and without tool changer
Design:	DP knives with axial angle and divided cut; shank 20 and 25 with internal thread
Tooth:	DP, Ø 20 mm with tip height 4 mm up to 10 times re-sharpenable Ø 25 mm with tip height 5 mm up to 14 times re-sharpenable L3* = Up-cut

D mm	L1 mm	L2 mm	L3* mm	Shank mm	Rhs/ Lhs	BH mm	Z	LZ	Order No.	Price [PG 03]
16	105	28,7	4,1	20	rhs	4,0	2		10205259	
16	105	28,7	4,1	20	lhs	4,0	2	◊	10205260	
16	110	34,7	4,1	20	rhs	4,0	2	◊	10205261	
16	110	34,7	4,1	20	lhs	4,0	2	◊	10205262	
18	105	28,7	4,1	20	rhs	4,0	2		10201721	
18	105	28,7	4,1	20	lhs	4,0	2	◊	10201722	
18	125	46,7	4,1	20	rhs	4,0	2		10201725	
18	125	46,7	4,1	20	lhs	4,0	2	◊	10201726	
20	105	28,7	4,1	20	rhs	4,0	2		10201727	
20	105	28,7	4,1	20	lhs	4,0	2	◊	10201728	
20	110	34,7	4,1	20	rhs	4,0	2	◊	10201729	
20	110	34,7	4,1	20	lhs	4,0	2	◊	10201730	
20	125	46,7	4,1	20	rhs	4,0	2		10201732	
20	125	46,7	4,1	20	lhs	4,0	2	◊	10201733	
25	105	28,7	4,1	20	rhs	5,0	2		10201734	
25	105	28,7	4,1	20	lhs	5,0	2	◊	10201735	
25	125	46,7	4,1	20	rhs	5,0	2		10201736	
25	125	46,7	4,1	20	lhs	5,0	2	◊	10201737	
16	105	28,7	4,1	25	rhs	4,0	2		10205263	
16	105	28,7	4,1	25	lhs	4,0	2	◊	10205264	
16	110	34,7	4,1	25	rhs	4,0	2	◊	10205265	
16	110	34,7	4,1	25	lhs	4,0	2	◊	10205266	
18	105	28,7	4,1	25	rhs	4,0	2		10201723	
18	105	28,7	4,1	25	lhs	4,0	2	◊	10201724	
18	125	46,7	4,1	25	rhs	4,0	2		10201738	
18	125	46,7	4,1	25	lhs	4,0	2	◊	10201739	
20	105	28,7	4,1	25	rhs	4,0	2		10201740	
20	105	28,7	4,1	25	lhs	4,0	2	◊	10201741	
20	110	34,7	4,1	25	rhs	4,0	2		10205257	
20	110	34,7	4,1	25	lhs	4,0	2	◊	10205258	
20	125	46,7	4,1	25	rhs	4,0	2		10201742	
20	125	46,7	4,1	25	lhs	4,0	2	◊	10201743	
25	105	28,7	4,1	25	rhs	5,0	2		10201744	
25	105	28,7	4,1	25	lhs	5,0	2	◊	10201745	
25	110	34,7	4,1	25	rhs	5,0	2		10201746	
25	110	34,7	4,1	25	lhs	5,0	2	◊	10201747	
25	125	46,7	4,1	25	rhs	5,0	2		10201748	
25	125	46,7	4,1	25	lhs	5,0	2	◊	10201749	
25	125	52,7	4,1	25	rhs	5,0	2	◊	10201750	
25	125	52,7	4,1	25	lhs	5,0	2	◊	10201751	

DP shank cutter HSK Plus Z2

» Cutting 2.0

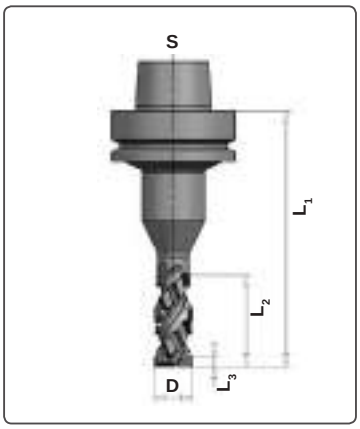

Your benefits at a glance:

- Tear-free edges on the top coat
- No tearing with transverse edge banding
- No multiple machining
- Ideally suitable for zero joint gaps and laser edge banding technology
- Extremely long tool life
- Large variety of materials

Application:	For sizing, grooving, jointing, rebating very high concentricity thanks to HSK Plus
Material:	Panel material with and without coating
Machine:	Stationary machines with and without tool changer
Design:	High rigidity due to HSK Plus interface for high demand; DP knives with axial angle and spiral knife positioning over 2 gullets. Therefore real Z 2 over the complete tip length; large gullet depth for high hogging performance
Tooth:	DP, Ø 20 mm with tip height 4 mm up to 10 times re-sharpenable Ø 25 mm with tip height 5 mm up to 14 times re-sharpenable L3* = Up-cut

D mm	L1 mm	L2 mm	L3* mm	Rhs/ Lhs	Z	LZ	Order No. cutter	Price [PG 03]	Order No. with HSK Plus holder 10033898	Price [PG 03]
Tip height 4 mm										
20	80	28,7	4,1	lhs	2	○	10203927	393,00 €	10203941	
20	80	28,7	4,1	rhs	2	○	10203926	393,00 €	10203940	
20	85	34,7	4,1	lhs	2	○	10203929	449,00 €	10203943	
20	85	34,7	4,1	rhs	2	○	10203928	449,00 €	10203942	
20	100	46,7	4,1	lhs	2	○	10203931	561,00 €	10203945	
20	100	46,7	4,1	rhs	2	○	10203930	561,00 €	10203944	
Tip height 5 mm										
25	80	28,7	4,1	lhs	2	○	10203933	408,00 €	10203948	
25	80	28,7	4,1	rhs	2	○	10203932	408,00 €	10203947	
25	85	34,7	4,1	lhs	2	○	10203935	464,00 €	10203951	
25	85	34,7	4,1	rhs	2	○	10203934	464,00 €	10203950	
25	100	46,7	4,1	lhs	2	○	10203937	575,00 €	10203953	
25	100	46,7	4,1	rhs	2	○	10203936	575,00 €	10203952	
25	105	52,7	4,1	lhs	2	○	10203939	631,00 €	10203955	
25	105	52,7	4,1	rhs	2	○	10203938	631,00 €	10203954	

43020 DP shank-type cutter
Z2, with DP boring tip

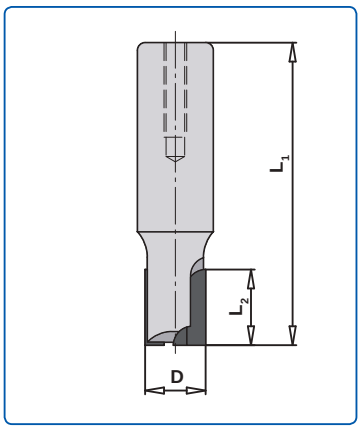

Application:	For sizing, grooving, jointing, rebating
Material:	Flat laminate (e.g. HPL), polymer plastic material (e.g. Corian), MDF
Machine:	Stationary machines with and without tool changer
Design:	Cutter with alternating axial angle; particularly recommended for processing laminated material (e.g. HPL); full-length DP knives and thus a cutting edge without marks as could happen in case of divided knives
Tooth:	DP, tip height 5 mm, re-grindable up to 14 times

	D mm	L2 mm	L1 mm	Shank mm	Rhs/Lhs	BH mm	Z	Order No.	Price [PG 03]
TOP	16	20	80	20x50	rhs	5,0	2+1	10110196	

43020 DP shank-type cutter
Z2+2, rh - lh rotation

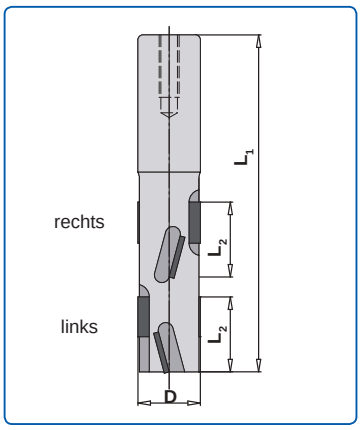

Application:	For sizing and jointing of work top corner joints; ideal for avoiding damage to visible edges by means of cutting both ways against the rotating direction
Material:	Panel material with and without coating
Machine:	Stationary machines with and without tool changer
Design:	DP knives with axial angle and positioned over 4 gullets; rh - lh rotation
Tooth:	DP, tip height 5 mm, re-grindable up to 14 times

D mm	L2 mm	L1 mm	Shank mm	BH mm	Z	Order No.	Price [PG 03]
25	30	135	25x55	5,0	2+2	10127176	

DP spiral shank cutter Z3

» Cutting 2.0

TOP

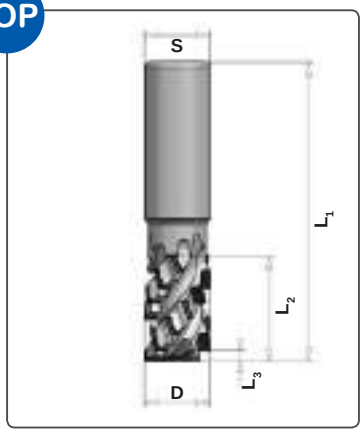

Your benefits at a glance:

- Tear-free edges on the top coat
- No tearing with transverse edge banding
- No multiple machining
- Ideally suitable for zero joint gaps and laser edge banding technology
- Extremely long tool life
- Large variety of materials

Application:	For sizing, grooving, jointing, rebating; very precise shank tolerances; for free plunging and circular drilling (helix); also suitable for shrink clamping
Material:	Panel material with and without coating
Machine:	Stationary machines with and without tool changer
Design:	DP knives with axial angle and dividing cut; shank 20 and 25 with internal thread
Tooth:	DP, Ø 20 with tip height 4 mm, re-grindable up to 10 times Ø 25 with tip height 5 mm, re-grindable up to 14 times L3* = Up-cut

D mm	L1 mm	L2 mm	L3* mm	Shank mm	Z	Rhs/Lhs	LZ	Order No.	Price [PG 03]
Tip height 4 mm									
20	105	28,7	4,1	20	3+3	rhs		10190087	
20	105	28,7	4,1	20	3+3	lhs	◊	10190089	
20	110	34,7	4,1	20	3+3	rhs		10194944	
20	110	34,7	4,1	20	3+3	lhs	◊	10194957	
20	115	40,7	4,1	20	3+3	rhs		10190090	
20	115	40,7	4,1	20	3+3	lhs	◊	10190091	
20	125	46,7	4,1	20	3+3	rhs		10190092	
20	125	46,7	4,1	20	3+3	lhs	◊	10190093	
20	105	28,7	4,1	25	3+3	rhs		10206293	
20	105	28,7	4,1	25	3+3	lhs	◊	10206294	
20	110	34,7	4,1	25	3+3	rhs		10206295	
20	110	34,7	4,1	25	3+3	lhs	◊	10206296	
20	115	40,7	4,1	25	3+3	rhs	◊	10206297	
20	115	40,7	4,1	25	3+3	lhs	◊	10206298	
20	125	46,7	4,1	25	3+3	rhs		10206299	
20	125	46,7	4,1	25	3+3	lhs	◊	10206300	

DP spiral shank cutter Z3

» Cutting 2.0

D mm	L1 mm	L2 mm	L3* mm	Shank mm	Z	Rhs/Lhs	LZ	Order No.	Price [PG 03]
Tip height 5 mm									
25	105	28,7	4,1	20	3+3	rhs		10206301	
25	105	28,7	4,1	20	3+3	lhs	◊	10206302	
25	110	34,7	4,1	20	3+3	rhs	◊	10206303	
25	110	34,7	4,1	20	3+3	lhs	◊	10206304	
25	115	40,7	4,1	20	3+3	rhs		10206305	
25	115	40,7	4,1	20	3+3	lhs	◊	10206306	
25	125	46,7	4,1	20	3+3	rhs		10206307	
25	125	46,7	4,1	20	3+3	lhs		10206308	
25	125	52,7	4,1	20	3+3	rhs	◊	10206309	
25	125	52,7	4,1	20	3+3	lhs	◊	10206310	
25	135	58,7	4,1	20	3+3	rhs		10206311	
25	135	58,7	4,1	20	3+3	lhs	◊	10206312	
25	145	70,7	4,1	20	3+3	rhs		10206313	
25	145	70,7	4,1	20	3+3	lhs	◊	10206314	
25	105	28,7	4,1	25	3+3	rhs		10190094	
25	105	28,7	4,1	25	3+3	lhs	◊	10190095	
25	110	34,7	4,1	25	3+3	rhs		10194942	
25	110	34,7	4,1	25	3+3	lhs	◊	10194943	
25	115	40,7	4,1	25	3+3	rhs		10190096	
25	115	40,7	4,1	25	3+3	lhs	◊	10190097	
25	125	46,7	4,1	25	3+3	rhs		10190098	
25	125	46,7	4,1	25	3+3	lhs		10190099	
25	125	52,7	4,1	25	3+3	rhs	◊	10190105	
25	125	52,7	4,1	25	3+3	lhs	◊	10190106	
25	135	58,7	4,1	25	3+3	rhs		10190100	
25	135	58,7	4,1	25	3+3	lhs	◊	10190101	
25	145	70,7	4,1	25	3+3	rhs		10190102	
25	145	70,7	4,1	25	3+3	lhs	◊	10190104	

DP spiral shank cutter HSK Plus Z3

» Cutting 2.0

TOP

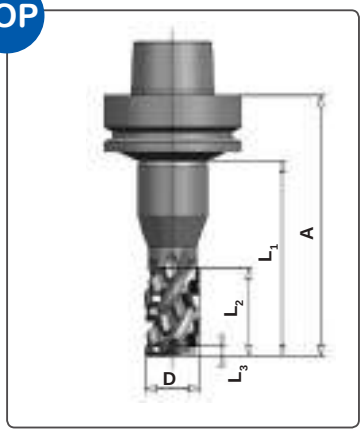

Your benefits at a glance:

- Tear-free edges on the top coat
- No tearing with transverse edge banding
- No multiple machining
- Ideally suitable for zero joint gaps and laser edge banding technology
- Extremely long tool life
- Large variety of materials

Application:	For sizing, grooving, jointing, rebating with high feed rates of up to 30 m/min; for free plunging and circular drilling (helix)
Material:	Panel material with and without coating
Machine:	Stationary machines with and without tool changer
Design:	High rigidity due to HSK Plus interface for high demand; DP knives with axial angle and spiral knife positioning over 3 gullets; therefore real Z 3 over the complete tip length; large gullet depth for high hogging performance
Tooth:	DP, tip height 5 mm re-grindable up to 14 times L3* = Up-cut

D mm	L1 mm	L2 mm	L3* mm	A mm	Z	Rhs/ Lhs	LZ	Order No. cutter	Price [PG 03]	Order No. with HSK Plus holder 10033898	Price [PG 03]
Tip height 4 mm											
20	80	28,7	4,1	110	3+3	rhs	○	10190138	436,00 €	10190142	
20	80	28,7	4,1	110	3+3	lhs	○	10190141	436,00 €	10190145	
20	85	34,7	4,1	115	3+3	rhs	○	10194947	473,00 €	10194951	
20	85	34,7	4,1	115	3+3	lhs	○	10194948	473,00 €	10194952	
20	90	40,7	4,1	120	3+3	rhs	○	10190139	579,00 €	10190143	
20	90	40,7	4,1	120	3+3	lhs	○	10194858	579,00 €	10194865	
20	100	46,7	4,1	130	3+3	rhs	○	10190140	648,00 €	10190144	
20	100	46,7	4,1	130	3+3	lhs		10194859	648,00 €	10194866	
Tip height 5 mm											
25	80	28,7	4,1	110	3+3	rhs	○	10190123	454,00 €	10190131	
25	80	28,7	4,1	110	3+3	lhs	○	10190122	454,00 €	10190130	
25	85	34,7	4,1	115	3+3	rhs	○	10194945	492,00 €	10194949	
25	85	34,7	4,1	115	3+3	lhs	○	10194946	492,00 €	10194950	
25	90	40,7	4,1	120	3+3	rhs	○	10190125	598,00 €	10190133	
25	90	40,7	4,1	120	3+3	lhs	○	10190124	598,00 €	10190132	
25	100	46,7	4,1	130	3+3	rhs	○	10190127	670,00 €	10190135	
25	100	46,7	4,1	130	3+3	lhs	○	10190126	670,00 €	10190134	
25	105	52,7	4,1	135	3+3	rhs	○	10190108	742,00 €	10194863	
25	105	52,7	4,1	135	3+3	lhs	○	10190107	742,00 €	10194861	
25	110	58,7	4,1	140	3+3	rhs	○	10190129	813,00 €	10190137	
25	110	58,7	4,1	140	3+3	lhs	○	10190128	813,00 €	10190136	
25	120	70,7	4,1	150	3+3	rhs	○	10194789	957,00 €	10194864	
25	120	70,7	4,1	150	3+3	lhs	○	10194790	957,00 €	10194862	

43020 DP Shank cutter HSK Plus *Harmony*

» Cutting 2.0

TOP

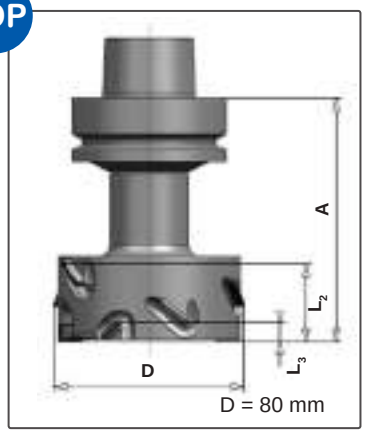

Your benefits at a glance:

- Tear-free edges on the top coat
- Long service life
- No tearing with transverse edge banding
- For standard and delicate types of material
- Ideally suitable for zero joint gaps and laser edge banding technology
- Particularly suitable for processing of solid wood.

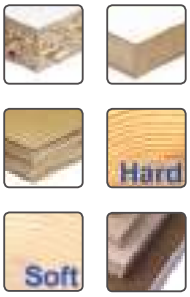

Application:	For sizing and jointing of wood-based panels with and without coating; particularly suitable for chip boards with low density and front-end processing of solid wood
Material:	Chip board, MDF, Multiplex, hard wood and soft wood, longitudinal and on the face. Wood-based material, honeycomb panels and light constructional panels
Machine:	Stationary machines with and without tool changer
Design:	Shank cutter with extremely large alternating axial angle for the production of jointing edges without splintering Ideal for zero joint gaps and laser edge banding technology The monolithic HSK Plus design guarantees the best possible run-out and thus a consistent, optimal surface quality; with V-line gullet
Tooth:	DP, tip height 3 mm, re-grindable up to 4 times tip height 5 mm, re-grindable up to 14 times L3* = Up-cut

For HSK Plus holder or SK30/40-Plus holder

D mm	L2 mm	L1 mm	L3* mm	Shank	BH mm	Z	max. wood thickness	LZ	Order No.	Price [PG 03]
80	30	73	8,3	HSK 63 F	5,0	3+3	27		10190116	

With HSK Plus holder, HSK 63 F

D mm	L2 mm	L3* mm	A mm	Shank	BH mm	Z	max. wood thickness	LZ	Order No.	Price [PG 03]
80	30	8,3	100	HSK 63 F	5,0	3+3	27		10190121	

DP shank cutter Z2 and Z3 *Harmony*

» Cutting 2.0

TOP

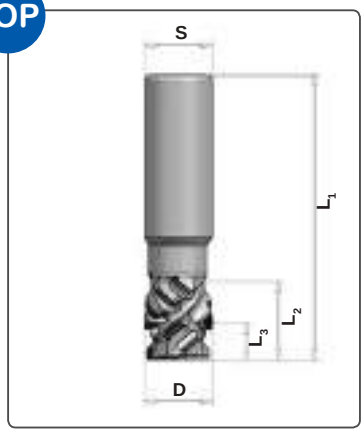

Your benefits at a glance:

- Tear-free edges on the top coat
- No tearing with transverse edge banding
- No multiple machining
- Ideally suitable for zero joint gaps and laser edge banding technology
- Extremely long tool life
- Large variety of materials

Application:	For sizing, grooving and jointing of wood-based panel material, both with and without coating; especially suitable for chip board with low density and front-end processing of solid wood; very precise shank tolerances; thus suitable for shrink clamping (recommended); suitable for plunge cutting and circular (helix) drilling
Material:	Panel material with and without coating
Machine:	Stationary machines with and without tool changer
Design:	Ø 16 - 25 mm tool body of steel; DP knives with extremely large axial angle with up-cut and down-cut design; for the production of tear-free jointing edges; asymmetrically positioned knives suitable for rebates of up to 12 mm height; the shank is threaded
Tooth:	DP L3* = Up-cut

D mm	Shank	L1 mm	L2 mm	L3* mm	Z	Rhs/Lhs	LZ	Order No.	Price [PG 03]
16	25	105	28	11	2	rhs		10206247	
16	25	105	34	11	2	rhs		10206248	
16	25	120	43	11	2	rhs	◊	10206249	
18	20	120	43	11	2	rhs		10206250	
18	25	120	43	11	2	rhs	◊	10206251	
20	20	105	28	11	2	rhs		10206252	
20	20	105	34	11	2	rhs	◊	10206253	
20	20	120	43	11	2	rhs		10206254	
20	20	120	52	11	2	rhs	◊	10206255	
20	25	105	28	11	2	rhs		10206256	
20	25	105	34	11	2	rhs	◊	10195138	
20	25	120	43	11	2	rhs		10206258	
20	25	120	52	11	2	rhs	◊	10196738	
25	20	105	28	11	2	rhs		10206260	
25	20	105	34	11	2	rhs	◊	10206262	
25	20	120	43	11	2	rhs		10206263	
25	20	120	52	11	2	rhs		10206264	
25	25	105	28	11	2	rhs		10196587	
25	25	105	34	11	2	rhs	◊	10206265	
25	25	120	43	11	2	rhs		10206266	
25	25	120	52	11	2	rhs	◊	10206267	
25	20	105	28	11	3	rhs		10206268	
25	20	105	34	11	3	rhs	◊	10206269	
25	20	120	43	11	3	rhs		10206270	
25	20	120	52	11	3	rhs	◊	10206271	
25	25	105	28	11	3	rhs		10194725	
25	25	105	34	11	3	rhs	◊	10206272	
25	25	120	43	11	3	rhs		10206273	
25	25	120	52	11	3	rhs	◊	10206274	

DP jointing-rebating cutter *Harmony*

» Cutting 2.0

TOP

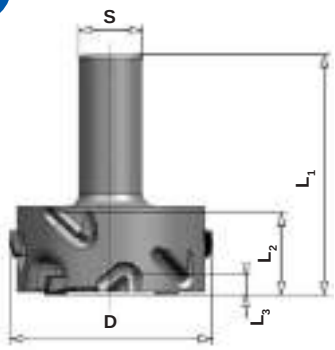

10188490

TOP

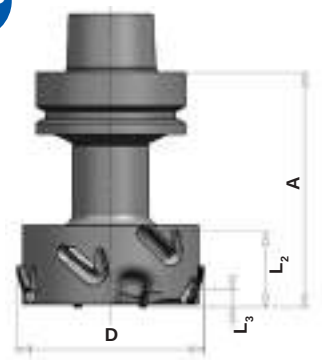

10190150

Your benefits at a glance:

- Tear-free edges on the top coat
- No tearing with transverse edge banding
- Ideally suitable for zero joint gaps and laser edge banding technology
- Particularly suitable for processing of solid wood
- No multiple machining
- Extremely long tool life
- No clogging of gullets even with long chips
- Large variety of materials

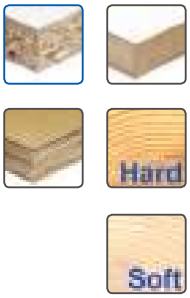

Application:	For rebating and jointing of wooden material and solid wood; especially suitable for materials with delicate top layers
Material:	Chip board, MDF, Multiplex, hard wood and soft wood, longitudinal and cross cuts as well as wood-based panels
Machine:	Stationary machines with and without tool changer
Design:	Jointing – rebating cutter with large alternating axial angle and newly developped rebating knife. With V-line gullet; almost tear-free rebating and jointing, including cross cuts
Tooth:	DP, tip height 3 mm, re-grindable up to 4 times L3* = Up-cut

DP shank cutter *Harmony* with cylindrical shank

D mm	L2 mm	L1 mm	L3* mm	Shank	BH mm	Z	LZ	Order No.	Price [PG 03]
80	32	95	7,7	25	3,0	2+2	◊	10188490	

DP jointing-rebating cutter *Harmony* with HSK Plus holder

D mm	L2 mm	L3* mm	A mm	Shank	BH mm	Z	LZ	Order No.	Price [PG 03]
80	32	7,7	100	HSK 63 F	3,0	2+2	◊	10190150	

DP jointing-rebating cutter *Harmony* for HSK Plus holder

D mm	L2 mm	L3* mm	A mm	Shank	BH mm	Z	LZ	Order No.	Price [PG 03]
80	32	7,7	70	HSK 63 F	3,0	2+2	◊	10190149	

33020 I DP jointing-rebating cutter Harmony

TOP

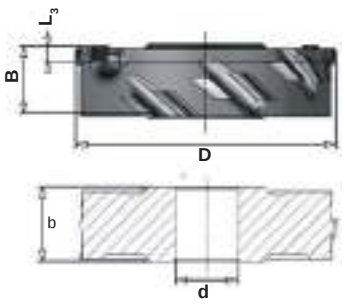

Your benefits at a glance:

- Processing a huge variety of materials in joineries
- Improved surface quality compared to TOK systems
- Favourable purchase price and low service cost
- Jointing knives for perfect edges, both at the beginning and the end
- 2 additional rebating knives for tear-free, smooth rebates
- No fraying when cutting against the glued edge

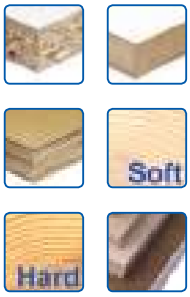

Application:	For rebating and jointing of wooden material and solid wood; especially suitable for materials with delicate top layers
Material:	Chip board, MDF, Multiplex, hard wood and soft wood, longitudinal and cross cuts as well as wood-based panels
Machine:	Bench-type milling machines with manual feed, edge banding machine
Design:	Jointing-rebating cutter with large alternating axial angle and newly developped rebating knife; special gullets with Streamline-design ensure that the chip removal is trouble-free without multiple chipping – even with materials with big chips; almost tear-free rebating and jointing, including cross cuts
Tooth:	DP, tip height 3,0 mm

D mm	B mm	b mm	d mm	L3* mm	Z	BH mm	Rhs/ Lhs	LZ	Order No.	Price [PG 03]
125	32	35,5	30	7,1	2+2	3,0	rhs		10181618	
150	32	35,5	50	7,1	2+2	3,0	rhs	◊	10188529	
150	50	53,5	30	7,1	2+2	3,0	rhs	◊	10189503	
150	50	53,5	50	7,1	2+2	3,0	rhs	◊	10190752	

43020 DP Nesting Cutter
with DP boring tip

TOP

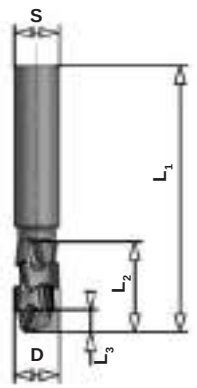

Your benefits at a glance:

- No tool breach due to high-performance steel
- Increased feed speed
- Higher economic efficiency
- Longer service life

Application:	High performance shank cutter for Nesting application
Material:	Chip board, MDF, Multiplex wood-based panel material with and without coating
Machine:	Stationary machine
Design:	With extremely rigid tool body made of heavy duty steel; with alternating axial angle and gullets for optimal chip ejection; suitable for high cutting performance; feed rates depending on the material and diameter up to 30 m/min
Tooth:	DP, tip height 2,5 mm, re-grindable up to 3 times L3* = Up-Cut

D mm	L2 mm	L1 mm	L3* mm	Shank mm	BH mm	Z	Order No.	Price [PG 03]
12	24,5	72	8,2	12	2,5	3	10201821	
16	24,5	77	8,2	16	2,5	3	10173288	

TOP

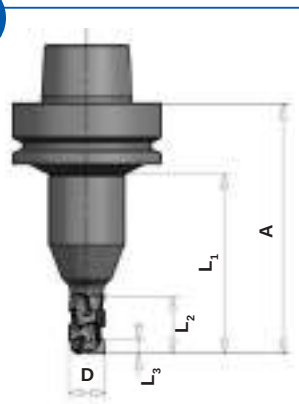

For HSK Plus holder, HSK 63 F

D mm	L2 mm	L1 mm	L3* mm	A mm	BH mm	Z	Order No.	Price [PG 03]
16	24,5	77	6,2	107	2,5	3	10174356	

With HSK Plus holder, HSK 63 F

D mm	L2 mm	L3* mm	A mm	BH mm	Z	Order No.	Price [PG 03]
16	24,5	6,2	107	2,5	3	10174368	

33020 DP jointing cutter

» Cutting 2.0

TOP

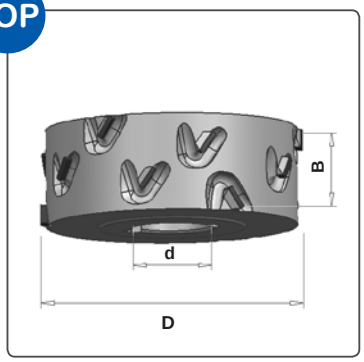

Tool body type with hub position

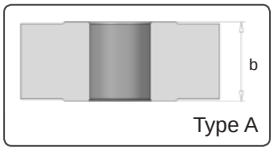

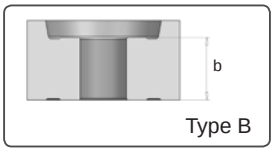

Your benefits at a glance:

- No multiple machining
- Extremely long tool life
- No clogging of gullets even with long chips
- Large variety of materials

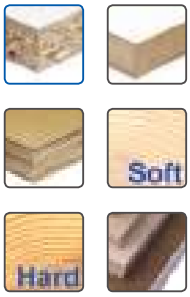

Application:	For sizing and jointing of wood-based panel material with and without coating, Limited suitability for chip boards with low density and front-end processing of solid wood
Material:	Chip board, MDF, Multiplex, hard wood and soft wood longitudinal, wood-based panel material
Machine:	Edge banding machines
Design:	Jointing cutter with alternating axial angle for sizing and the production of tear-free jointing edges; with V-line gullet, design optionally symmetrical or asymmetrical
Tooth:	DP, tip height 3 mm, re-grindable up to 4 times tip height 5 mm, re-grindable up to 14 times
Symmetetrical Design:	Always adjusted to the centre of the workpiece; the tool is slightly convex at the outer diameter; for both right hand and left hand rotation
Asymmetrical Design:	Always adjusted to the bottom line of the workpiece; the tool is straight at the outer diameter, right hand or left hand design

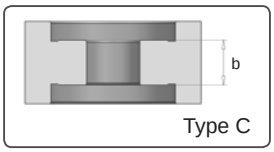

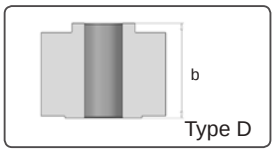

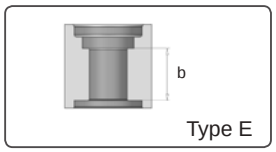

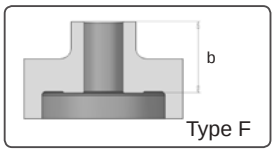

D mm	B mm	b mm	d mm	Z	BH mm	Machine	Type	Rhs/ Lhs	LZ	Order No.	Price [PG 03]
Tip height 3 mm											
60	64	64	25/DKN	2+2	3,0	Felder	C	rhs		10189632	
60	64	64	25/DKN	2+2	3,0	Felder	C	lhs		10189633	
70	47	61	25/DKN	2+2	3,0	Hebrock	D	rhs		10189652	
70	47	61	25/DKN	2+2	3,0	Hebrock	D	lhs		10189653	
70	54	31	30/DKN	2+2	3,0	HolzHer	E	rhs	◊	10189639	
70	54	31	30/DKN	2+2	3,0	HolzHer	E	lhs	◊	10189640	
70	64	41	30/DKN	2+2	3,0	HolzHer	E	rhs		10189641	
70	64	41	30/DKN	2+2	3,0	HolzHer	E	lhs		10189642	
85	45	48	30/DKN	3+3	3,0	Ott	A	rhs		10189607	
85	45	48	30/DKN	3+3	3,0	Ott	A	lhs		10189608	
100	34	39	30/DKN	3+3	3,0	Brandt	A	rhs	◊	10189609	
100	34	39	30/DKN	3+3	3,0	Brandt	A	lhs	◊	10189612	
100	45,5	61	30/DKN	2+2	3,0	Hebrock	D	rhs		10189630	

33020 DP jointing cutter

» Cutting 2.0

D mm	B mm	b mm	d mm	Z	BH mm	Machine	Type	Rhs/ Lhs	LZ	Order No.	Price [PG 03]
100	45,5	61	30/DKN	2+2	3,0	Hebrock	D	lhs		10189631	
100	48	25	30/DKN	2+2	3,0	HolzHer	C	rhs		10189620	
100	48	25	30/DKN	2+2	3,0	HolzHer	C	lhs		10189621	
100	48	40,6	25/DKN	2+2	3,0	Brandt	B	rhs	◊	10190580	
100	48	40,6	25/DKN	2+2	3,0	Brandt	B	lhs	◊	10190581	
100	48	40,6	30/DKN	3+3	3,0	Brandt	B	rhs		10189618	
100	48	40,6	30/DKN	3+3	3,0	Brandt	B	lhs		10189619	
100	63	25	30/DKN	2+2	3,0	HolzHer	C	rhs	◊	10189643	
100	63	25	30/DKN	2+2	3,0	HolzHer	C	lhs	◊	10189644	
100	63	40,6	30/DKN	3+3	3,0	IMA/Brandt	B	rhs	◊	10198322	
100	63	40,6	30/DKN	3+3	3,0	IMA/Brandt	B	lhs	◊	10198323	
100	65,5	75	30/DKN	2+2	3,0	Hebrock	D	rhs	◊	10189637	
100	65,5	75	30/DKN	2+2	3,0	Hebrock	D	lhs	◊	10189638	
125	34	37,6	30/DKN	3+3	3,0	Homag	C	sym		10189662	
125	42	47	30/DKN	3+3	3,0	Biesse	A	sym	◊	10189664	
125	43	40	30/DKN	3+3	3,0	Homag	C	sym		10189663	
125	43	57	30/DKN	3+3	3,0	IMA Advantage	F	rhs		10190607	
125	43	57	30/DKN	3+3	3,0	IMA Advantage	F	lhs		10190608	
125	48	40,6	30/DKN	3+3	3,0	IMA	B	rhs		10189650	
125	48	40,6	30/DKN	3+3	3,0	IMA	B	lhs		10189651	
125	63	40,6	30/DKN	3+3	3,0	IMA	B	rhs	◊	10189648	
125	63	40,6	30/DKN	3+3	3,0	IMA	B	lhs	◊	10189649	
125	63	40,6	30/DKN	3+3	3,0	Homag	C	sym		10189660	
125	63	57	30/DKN	3+3	3,0	IMA Advantage	F	rhs	◊	10190605	
125	63	57	30/DKN	3+3	3,0	IMA Advantage	F	lhs	◊	10190606	
Tip height 5 mm											
100	45,5	61	30/DKN	2+2	5,0	Hebrock	D	rhs	◊	10189656	
100	45,5	61	30/DKN	2+2	5,0	Hebrock	D	lhs	◊	10189657	
100	48	25	30/DKN	2+2	5,0	HolzHer	C	rhs	◊	10190794	
100	48	25	30/DKN	2+2	5,0	HolzHer	C	lhs	◊	10190795	
100	48	40,6	30/DKN	3+3	5,0	Brandt	B	rhs		10189654	
100	48	40,6	30/DKN	3+3	5,0	Brandt	B	lhs		10189655	
100	65,5	75	30/DKN	2+2	5,0	Hebrock	D	rhs	◊	10189658	
100	65,5	75	30/DKN	2+2	5,0	Hebrock	D	lhs	◊	10189659	

33020 DP jointing cutter *Harmony*

» Cutting 2.0

TOP

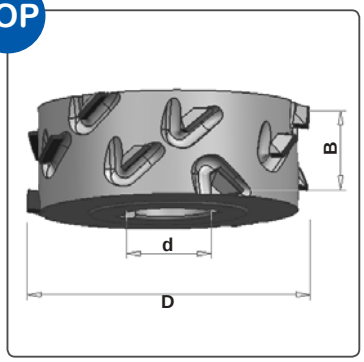

Your benefits at a glance:

- Tear-free edges on the top coat
- No tearing with transverse edge banding
- Ideally suitable for zero joint gaps and laser edge banding technology
- Particularly suitable for processing of solid wood
- No multiple machining
- Extremely long tool life
- No clogging of gullets even with long chips
- Large variety of materials

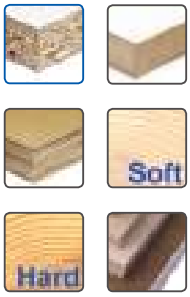

Application:	For sizing and jointing of wood-based panel material with and without coating, Limited suitability for chip boards with low density and front-end processing of solid wood
Material:	Chip board, MDF, Multiplex, hard wood and soft wood longitudinal, wood-based panel material
Machine:	Edge banding machines
Design:	Jointing cutter with alternating axial angle for sizing and the production of tear-free jointing edges; with V-line gullet, design optionally symmetrical or asymmetrical
Tooth:	DP, tip height 5 mm, re-grindable up to 14 times
Symmetetrical Design:	Always adjusted to the centre of the workpiece; the tool is slightly convex at the outer diameter; for both right hand and left hand rotation
Asymmetrical Design:	Always adjusted to the bottom line of the workpiece; the tool is straight at the outer diameter, right hand or left hand design

Tool body type with hub position

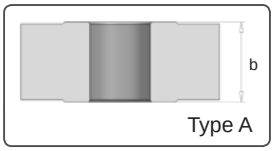

Type A

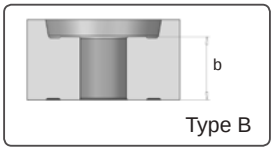

Type B

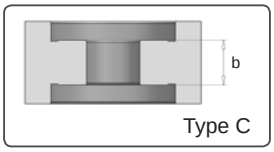

Type C

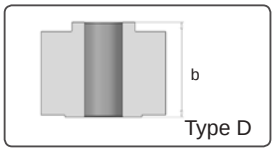

Type D

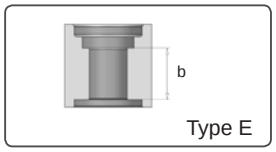

Type E

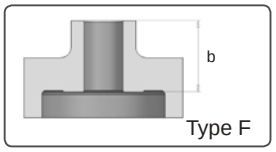

Type F

D mm	B mm	b mm	d mm	Z	BH mm	Machine	Type	Rhs/ Lhs	LZ	Order No.	Price [PG 03]
60	64	64	25/DKN	2+2	5,0	Felder	C	rhs	◊	10189678	
60	64	64	25/DKN	2+2	5,0	Felder	C	lhs	◊	10189679	
70	47	61	25/DKN	2+2	5,0	Hebrock	D	rhs	◊	10189700	
70	47	61	25/DKN	2+2	5,0	Hebrock	D	lhs	◊	10189701	
70	54	31	30/DKN	2+2	5,0	HolzHer	E	rhs	◊	10189682	
70	54	31	30/DKN	2+2	5,0	HolzHer	E	lhs	◊	10189683	
70	64	41	30/DKN	2+2	5,0	HolzHer	E	rhs	◊	10189684	
70	64	41	30/DKN	2+2	5,0	HolzHer	E	lhs	◊	10189685	
85	45	48	30/DKN	3+3	5,0	Ott	A	rhs	◊	10189666	
85	45	48	30/DKN	3+3	5,0	Ott	A	lhs	◊	10189667	

33020 DP jointing cutter *Harmony*

» Cutting 2.0

D mm	B mm	b mm	d mm	Z	BH mm	Machine	Type	Rhs/ Lhs	LZ	Order No.	Price [PG 03]
100	34	39	30/DKN	3+3	5,0	Brandt	A	rhs		10189669	
100	34	39	30/DKN	3+3	5,0	Brandt	A	lhs		10189668	
100	45,5	61	30/DKN	2+2	5,0	Hebrock	D	rhs	◊	10189674	
100	45,5	61	30/DKN	2+2	5,0	Hebrock	D	lhs	◊	10189675	
100	48	25	30/DKN	2+2	5,0	HolzHer	C	rhs	◊	10189672	
100	48	25	30/DKN	2+2	5,0	HolzHer	C	lhs	◊	10189673	
100	48	40,6	25/DKN	2+2	5,0	Brandt	B	rhs	◊	10190484	
100	48	40,6	25/DKN	2+2	5,0	Brandt	B	lhs	◊	10190485	
100	48	40,6	30/DKN	3+3	5,0	Brandt	B	rhs		10189671	
100	48	40,6	30/DKN	3+3	5,0	Brandt	B	lhs		10189670	
100	63	25	30/DKN	2+2	5,0	HolzHer	C	rhs	◊	10189687	
100	63	25	30/DKN	2+2	5,0	HolzHer	C	lhs	◊	10189686	
100	63	40,6	30/DKN	3+3	5,0	IMA/ Brandt	B	rhs		10190084	
100	63	40,6	30/DKN	3+3	5,0	IMA/ Brandt	B	lhs		10190085	
100	65,5	75	30/DKN	2+2	5,0	Hebrock	D	rhs	◊	10189676	
100	65,5	75	30/DKN	2+2	5,0	Hebrock	D	lhs	◊	10189677	
125	34	37,6	30/DKN	3+3	5,0	Homag	C	sym		10189690	
125	42	47	30/DKN	3+3	5,0	Biesse	A	sym	◊	10189699	
125	43	40	30/DKN	3+3	5,0	Homag	C	sym		10189698	
125	43	57	30/DKN	3+3	5,0	IMA Advantage	F	rhs	◊	10190745	
125	43	57	30/DKN	3+3	5,0	IMA Advantage	F	lhs	◊	10190746	
125	48	40,6	30/DKN	3+3	5,0	IMA	B	rhs		10189697	
125	48	40,6	30/DKN	3+3	5,0	IMA	B	lhs		10189693	
125	63	40,6	30/DKN	3+3	5,0	Homag	C	sym	◊	10189688	
125	63	40,6	30/DKN	3+3	5,0	IMA	B	rhs	◊	10189691	
125	63	40,6	30/DKN	3+3	5,0	IMA	B	lhs	◊	10189692	
125	63	57	30/DKN	3+3	5,0	IMA Advantage	F	rhs	◊	10190743	
125	63	57	30/DKN	3+3	5,0	IMA Advantage	F	lhs	◊	10190744	

35020 DP radii trimming cutter *Streamline*
with axial angle

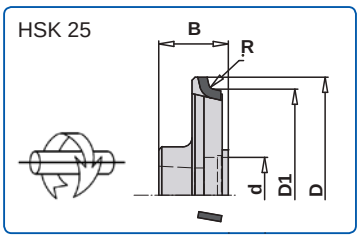

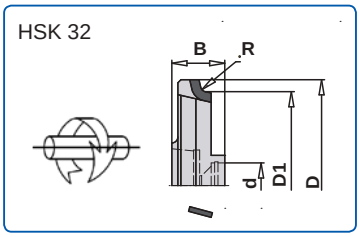

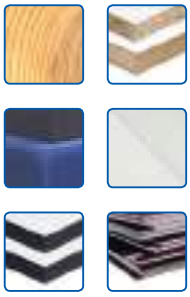

Application:	For smoothing and profiling of edges on keyed aggregates
Material:	All types of edge banding material, PVC, PP, ABS, melamine, veneer, solid wood, HPL
Machine:	Sizing machines and edge banding machines
Design:	Radii cutters with HSK25/HSK32 holder and clamping screw; this tool has a small axial angle in order to protect the edge against being pulled down; chip-guided design
Tooth:	DP
Re-grinding area:	Tip height 2,5 mm; can be re-sharpened; however, re-grinding is not recommended, because the rollers have to be adjusted to the new, smaller tool diameter after sharpening with high expenditure of time

HSK 25

D mm	D1-base dimension	B mm	d mm	Z	BH mm	R	n (max) min^{-1}	Rhs/ Lhs	LZ	Order No.	Price [PG 03]
79	70	23	HSK 25	4	2,5	1,5	24.000	rhs	◊	10176500	
79	70	23	HSK 25	4	2,5	1,5	24.000	lhs	◊	10176501	
79	70	23	HSK 25	6	2,5	1,5	24.000	rhs	◊	10176502	
79	70	23	HSK 25	6	2,5	1,5	24.000	lhs	◊	10176503	
79	70	23	HSK 25	4	2,5	2	24.000	rhs	◊	10176505	
79	70	23	HSK 25	4	2,5	2	24.000	lhs	◊	10176506	
79	70	23	HSK 25	6	2,5	2	24.000	rhs	◊	10176507	
79	70	23	HSK 25	6	2,5	2	24.000	lhs	◊	10176508	
79	70	23	HSK 25	4	2,5	3	24.000	rhs	◊	10176509	
79	70	23	HSK 25	4	2,5	3	24.000	lhs	◊	10176510	
79	70	23	HSK 25	6	2,5	3	24.000	rhs	◊	10176511	
79	70	23	HSK 25	6	2,5	3	24.000	lhs	◊	10176512	

HSK 32

D mm	D1-base dimension	B mm	d mm	Z	BH mm	R	n (max) min^{-1}	Rhs/ Lhs	LZ	Order No.	Price [PG 03]
70	62	17,5	HSK 32	4	2,5	1,5	24.000	rhs	◊	10176513	
70	62	17,5	HSK 32	4	2,5	1,5	24.000	lhs	◊	10176514	
70	62	17,5	HSK 32	6	2,5	1,5	24.000	rhs	◊	10176515	
70	62	17,5	HSK 32	6	2,5	1,5	24.000	lhs	◊	10176517	
70	62	17,5	HSK 32	4	2,5	2	24.000	rhs	◊	10176518	
70	62	17,5	HSK 32	4	2,5	2	24.000	lhs	◊	10176519	
70	62	17,5	HSK 32	6	2,5	2	24.000	rhs	◊	10176520	
70	62	17,5	HSK 32	6	2,5	2	24.000	lhs	◊	10176521	
70	62	17,5	HSK 32	4	2,5	3	24.000	rhs	◊	10176522	
70	62	17,5	HSK 32	4	2,5	3	24.000	lhs	◊	10176523	
70	62	17,5	HSK 32	6	2,5	3	24.000	rhs	◊	10176525	
70	62	17,5	HSK 32	6	2,5	3	24.000	lhs	◊	10176526	

35020 DP multiple radii trimming cutter
for through-feed machines

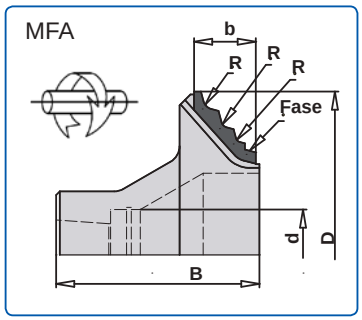

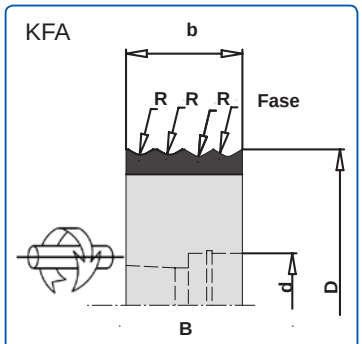

KFA cutter available on request

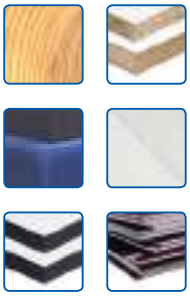

Application:	For smoothing and profiling of edges on keyed aggregates
Material:	All types of edge banding material, PVC, PP, ABS, melamine, veneer, solid wood, HPL
Machine:	IMA sizing machines and edge banding machines KFA and MFA aggregate
Design:	MFA = cranked cutter, horizontal spindle; KFA = straight cutter, swivelled spindle; radii cutter with multiple radii and chamfer; radii are designed according to customer demand
Tooth:	DP
Re-grinding area:	Tip height 3,0 mm; can be re-sharpened; however re-grinding is not recommended, because the rollers have to be adjusted to the new, smaller tool diameter after sharpening with high expenditure of time

MFA Cutter

D mm	B mm	b mm	d mm	Z	BH mm	R	Chamfer	n (max) min^{-1}	Rhs/ Lhs	LZ	Order No.	Price [PG 03]
90	56	17	HSK 25	6	3,0	1,0/2,0/3,0	15°	24.000	rhs	○	10029541	
90	56	17	HSK 25	6	3,0	1,0/2,0/3,0	15°	24.000	lhs	○	10029540	
90	56	17	HSK 25	6	3,0	2,0/3,0	20°	24.000	rhs	○	10039580	
90	56	17	HSK 25	6	3,0	2,0/3,0	20°	24.000	lhs	○	10039581	

35020 DP bevel cutter *Streamline*
with axial angle

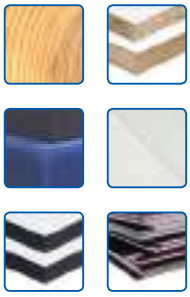

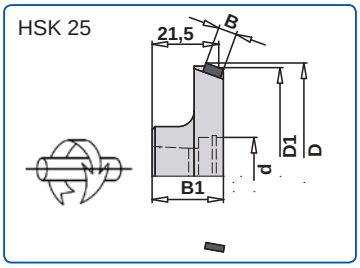

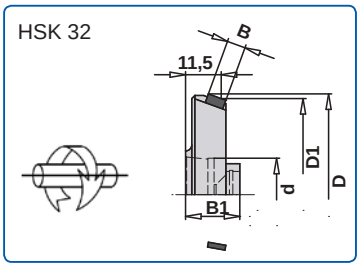

Application:	For bevelling
Material:	Solid wood, veneer, PVC, PP, ABS, PMMA, HPL, melamine, solid melamine
Machine:	IMA, Homag edge banding machines
Design:	Bevel cutters with HSK25/HSK32 holder and clamping screw; this tool has a small axial angle in order to protect the edge against being pulled down; chip-guided design.
Tooth:	DP
Re-grinding area:	Tip height 3 mm; can be re-sharpened; however re-grinding is not recommended, because the rollers have to be adjusted to the new, smaller tool diameter after sharpening with high expenditure of time

HSK 25

D mm	D1-base dimension	B mm	B1 mm	d mm	Z	BH mm	Chamfer	n (max) min^{-1}	Rhs/ Lhs	LZ	Order No.	Price [PG 03]
74	70	6	23	HSK 25	4	3	20°	24.000	rhs	◊	10176531	
74	70	6	23	HSK 25	4	3	20°	24.000	lhs	◊	10176532	
74	70	6	23	HSK 25	6	3	20°	24.000	rhs	◊	10176533	
74	70	6	23	HSK 25	6	3	20°	24.000	lhs	◊	10176534	

HSK 32

D mm	D1-base dimension	B mm	B1 mm	d mm	Z	BH mm	Chamfer	n (max) min^{-1}	Rhs/ Lhs	LZ	Order No.	Price [PG 03]
65	62	6	17,5	HSK 32	4	3	20°	24.000	rhs	◊	10176535	
65	62	6	17,5	HSK 32	4	3	20°	24.000	lhs	◊	10176536	
65	62	6	17,5	HSK 32	6	3	20°	24.000	rhs	◊	10176537	
65	62	6	17,5	HSK 32	6	3	20°	24.000	lhs	◊	10176538	

35020 DP trimming cutter *Streamline*
with axial angle

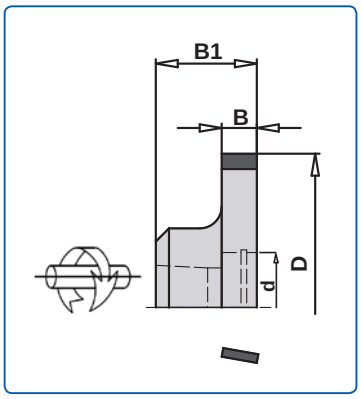

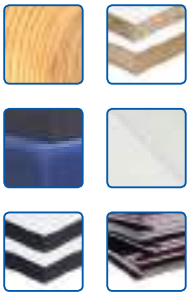

Application:	For smoothing edges on keyed aggregates
Material:	All types of edge banding material. PVC, PP, ABS, melamine, veneer, HPL
Machine:	Sizing machines and edge banding machines
Design:	Trimming cutter with HSK 25 holder and clamping screw; this tool has a small axial angle in order to protect the edge against being pulled down; chip-guided design
Tooth:	DP
Re-grinding area:	Tip height 3 mm; can be re-sharpened; however re-grinding is not recommended, because the rollers have to be adjusted to the new, smaller tool diameter after sharpening with high expenditure of time

D mm	B mm	B1 mm	d mm	Z	BH mm	n (max) min^{-1}	Rhs/ Lhs	LZ	Order No.	Price [PG 03]
70	8	23	HSK 25	4	3	24.000	rhs	◊	10176539	
70	8	23	HSK 25	4	3	24.000	lhs	◊	10176540	
70	8	23	HSK 25	6	3	24.000	rhs	◊	10176542	
70	8	23	HSK 25	6	3	24.000	lhs	◊	10176541	

2600 I DP compact hogger Ultra *Streamline*

Your benefits at a glance:

- Chip guiding function by means of a chip disc
- Chip ejection away from the material right into the suction
- No re-hogging
- Almost dust-free workpiece surfaces

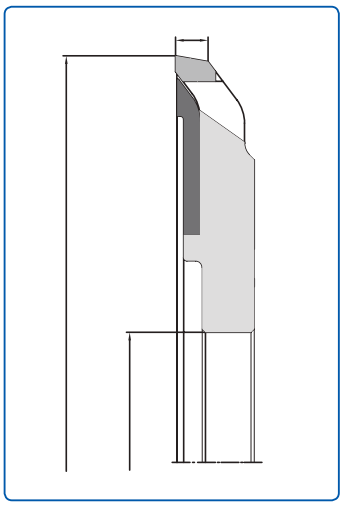

Application:	For sizing wood-based panel material with and without coating
Material:	Chip board, MDF, Multiplex, hard wood and soft wood longitudinal, wood-based panel material; suitable also for chip boards with low density
Machine:	Sizing machines and edge banding machines
Design:	With chip guidance for sizing and for the production of tear-free narrow surface edges and workpiece edges; ULTRA design (no reduction of the cutting width when re-grinding); the hogger can be re-eroded on top and side removing the same amount
Tooth:	DP, Tip height 6 mm; re-eroding up to 12 times
Interface:	Quick clamping sleeve 160 with 4 bayonet holders, TK 130 hogger d = 60 mm Quick clamping sleeve 192 with 4 bayonet holders, TK 150 hogger d = 80 mm Standard hogger sleeve d = 35 mm DKW (Homag / IMA) Hydro sleeve d = 40 mm hexagonal
Feed speed:	Z 24 feed up to 30 m/min Z 36 feed up to 36 bis 45 m/min Z 48 feed up to 48 bis 60 m/min Z 54 feed up to 54 bis 70 m/min Hoggers for higher feed speed on request

					for S-System 160		*for S-System 192*		*Hogger with sleeve*		*Hogger with hydro*	
D mm	**B mm**	**Z**	**Rhs/ Lhs**	**LZ**	**Order No.**	**Price [PG 03]**	**Order No.**	**Price [PG 03]**	**Order No.**	**Price [PG 03]**	**Order No.**	**Price [PG 03]**
250	10	54	lhs	○	10174929		10171497		10171508		10171516	
250	10	54	rhs	○	10174930		10171496		10171507		10171515	
250	10	48	lhs	○	10174931		10171495		10171506		10171514	
250	10	48	rhs	○	10174932		10171494		10171505		10171513	
250	10	36	lhs	○	10174933		10171493		10171504		10171512	
250	10	36	rhs	○	10174934		10171492		10171503		10171511	
250	10	24	lhs	○	10174935		10171491		10171502		10171510	
250	10	24	rhs	○	10174937		10171489		10171501		10171509	

Notes

Hoggers

Content

Hoggers

Products | Page

Technical information 196-197

Compact hogger 198-199

Segment hogger 200-203

Vario hogger 204-205

Saw blade segment hogger 206-207

Spare saw blade 208

Scoring saw blade 209-211

Technical information
Hogger

	DP compact Hogger 2600
Application	For sizing coated or uncoated panel material for furniture
Machine	Double end profiler with standard shaft or hydro shaft
Material	
OSB, chip board, MDF warm	-
OSB boards	+++
Chip board with loose central layer	+++
Chip board, Melamine coated	+++
Chip board, HPL coated	++
Chip board, paper or foil coated	+++
Chip board with projecting veneer, longitudinal	+++ **with chipper knives**
Chip board with projecting veneer, cross cut	++
Chip board with loose projection	-
MDF coated and uncoated	++ **without hydro** +++ **with hydro on hydro shaft**
Solid wood, longitudinal	+
Solid wood, cross	+

Technical information
Hogger

Segment-Hogger 0033	**Vario-Hogger** 0033	**Saw blade Segment-Hogger** 0033
For sizing uncoated panel material	For sizing and hogging of solid wood	For sizing of coated and uncoated panel material with large hogging width
Double end profiler	Multi-rip saws Double-end profilers	Multi-rip saws Double-end profilers
++	-	++
++	+	++
+	+	+
+	+	+
-	-	+
-	-	-
-	+	+ **with splinter wood** **with unilaterally heightened segments**
-	+	+ **with splinter wood** **with unilaterally heightened segments**
+	-	++
+	+	+
-	++	-
-	+	++ **with unilaterally heightened segments**

2600 I DP compact hogger Ultra *Streamline*

Your benefits at a glance:

- Chip guiding function by means of a chip disc
- Chip ejection away from the material right into the suction
- No re-hogging
- Almost dust-free workpiece surfaces

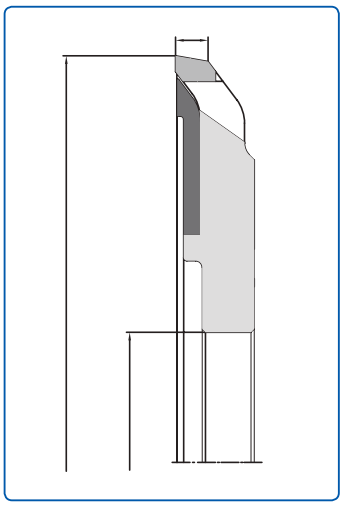

Application:	For sizing wood-based panel material with and without coating
Material:	Chip board, MDF, Multiplex, hard wood and soft wood longitudinal, wood-based panel material; suitable also for chip boards with low density
Machine:	Sizing machines and edge banding machines
Design:	With chip guidance for sizing and for the production of tear-free narrow surface edges and workpiece edges; ULTRA design (no reduction of the cutting width when re-grinding); the hogger can be re-eroded on top and side removing the same amount
Tooth:	DP, Tip height 6 mm; re-eroding up to 12 times
Interface:	Quick clamping sleeve 160 with 4 bayonet holders, TK 130 hogger d = 60 mm Quick clamping sleeve 192 with 4 bayonet holders, TK 150 hogger d = 80 mm Standard hogger sleeve d = 35 mm DKW (Homag / IMA) Hydro sleeve d = 40 mm hexagonal
Feed speed:	Z 24 feed up to 30 m/min Z 36 feed up to 36 bis 45 m/min Z 48 feed up to 48 bis 60 m/min Z 54 feed up to 54 bis 70 m/min Hoggers for higher feed speed on demand

					for S-System 160		*for S-System 192*		*Hogger with sleeve*		*Hogger with hydro*	
D mm	**B mm**	**Z**	**Rhs/ Lhs**	**LZ**	**Order No.**	**Price [PG 03]**	**Order No.**	**Price [PG 03]**	**Order No.**	**Price [PG 03]**	**Order No.**	**Price [PG 03]**
250	10	54	lhs	○	10174929		10171497		10171508		10171516	
250	10	54	rhs	○	10174930		10171496		10171507		10171515	
250	10	48	lhs	○	10174931		10171495		10171506		10171514	
250	10	48	rhs	○	10174932		10171494		10171505		10171513	
250	10	36	lhs	○	10174933		10171493		10171504		10171512	
250	10	36	rhs	○	10174934		10171492		10171503		10171511	
250	10	24	lhs	○	10174935		10171491		10171502		10171510	
250	10	24	rhs	○	10174937		10171489		10171501		10171509	

Questionnaire

Customer data:

Company name:

Customer number: _____

Contact person: _____

Post code - place:

Order or consignment no.: _____

Workpiece data:

☐ Soft wood ☐ Glulam
☐ Hard wood ☐ MDF
☐ Chip board ☐ OSB
☐ Others:

Wood thickness: _____in mm

Type of coating:

☐ Melamine ☐ Paper
☐ High gloss film ☐ none
☐ Lacquer ☐ HPL
☐ Lacquer, high gloss ☐ _____

Projection of the cover: _____ in mm

Position of the hogger:

☐ synchronous ☐ up-cut

☐ **top** rh machine side

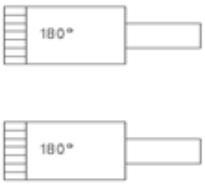

☐ **bottom**

☐ **top** lh machine side

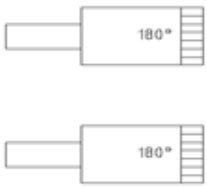

☐ **bottom**

Machine data:

Manufacturer:

Machine-No.:

Feed m/min longitud.:

Feed m/min cross:

Speed / rpm:

Tool data:

Large Ø: _____
Number of teeth.: _____
Kerf: _____
Bore size _____

Interface:

☐ Quick clamping system
☐ Hydro hexagonal
☐ DKW Size: _____ in mm
☐ Standard sleeve 35 mm DKW
☐ Standard sleeve 40 mm DKW

Knife quality:

☐ HW ☐ DP

Number: lh rotation ☐
rh rotation ☐

Hogger type: ☐ Compact-Ultra ☐ Segment ☐ Saw blade segment ☐Vario

Survey in the AKE catalogue from page 126

Drawing / other remarks: ☐ **please send exisiting drawing as .dxf** file to **cad@ake.de**

☐ wood sample (please send, if possible)

0034 AKE Segment hogger
with Fixmatic quick clamping system

Fig.: Right-hand design

Application:	For sizing panel material
Material:	Wood-based material, raw and coated
Machine:	Double-end profiler and edge bander
Design:	Hogger with steel body with inserted carbide-tipped segments with carbide tipped sawblade, flat teeth. low-noise; Mounted to the Fixmatic quick clamping system
Tooth:	HW / DP on demand

D mm	B mm	d mm	Z	Tooth shape	Rhs / Lhs	Order No.	Price [PG 03]
with Fixmatic P: D = 147 mm							
205	20	35 DKN	44 / 12	F	lhs	0034.200.35	
205	20	35 DKN	44 / 12	F	rhs	0034.200.36	
205	20	40 DKN	44 / 12	F	lhs	0034.200.42	
205	20	40 DKN	44 / 12	F	rhs	0034.200.43	
205	20	35 DKN	60 / 12	F	lhs	0034.201.35	
205	20	35 DKN	60 / 12	F	rhs	0034.201.36	
205	20	40 DKN	60 / 12	F	lhs	0034.201.42	
205	20	40 DKN	60 / 12	F	rhs	0034.201.43	
with Fixmatic P: D = 192 mm							
255	20	35 DKN	48 / 18	F	lhs	0034.250.35	
255	20	35 DKN	48 / 18	F	rhs	0034.250.36	
255	20	40 DKN	48 / 18	F	lhs	0034.250.42	
255	20	40 DKN	48 / 18	F	rhs	0034.250.43	
255	20	35 DKN	60 / 18	F	lhs	0034.251.35	
255	20	35 DKN	60 / 18	F	rhs	0034.251.36	
255	20	40 DKN	60 / 18	F	lhs	0034.251.42	
255	20	40 DKN	60 / 18	F	rhs	0034.251.43	

Hogger with HW saw blade

Suitable for Fixmatic P quick clamping system

D mm	B mm	d mm	Z	Tooth shape	Rhs/Lhs	Order No.	Price [PG 03]
205	20	75	44 / 12	F	lhs	0034.202.35	
205	20	75	44 / 12	F	rhs	0034.202.36	
205	20	75	60 / 12	F	lhs	0034.203.35	
205	20	75	60 / 12	F	rhs	0034.203.36	
255	20	80	48 / 18	F	lhs	0034.252.35	
255	20	80	48 / 18	F	rhs	0034.252.36	
255	20	80	60 / 18	F	lhs	0034.253.35	
255	20	80	60 / 18	F	rhs	0034.253.36	

0032 Spare parts for hoggers
suitable for AKE Segment hogger 0034

HW saw blade [0032]

10,5 mm countersunk (lhs = top counterclockwise, rhs = top clockwise)

D mm	B mm	b mm	d mm	pin hole mm	Z	Tooth shape	Rhs/ Lhs	Order No.	Price [PG 01]
205	4,00	2,80	80	4/6/140	44	F	lhs	0032.201.01	
205	4,00	2,80	80	4/6/140	44	F	rhs	0032.202.01	
205	4,00	2,80	80	4/6/140	60	F	lhs	0032.203.01	
205	4,00	2,80	80	4/6/140	60	F	rhs	0032.204.01	
255	4,00	2,80	100	6/6/190	48	F	lhs	0032.255.01	
255	4,00	2,80	100	6/6/190	48	F	rhs	0032.255.02	
255	4,00	2,80	100	6/6/190	60	F	lhs	0032.255.03	
255	4,00	2,80	100	6/6/190	60	F	rhs	0032.255.04	

Fixmatic P quick clamping system [0038]

D mm	Denomination	d mm	Order No.	Price [PG 02]
147	for hogger D=205	35 DKN	0038.147.35	
147	for hogger D=205	40 DKN	0038.147.46	
192	for hogger D=255	35 DKN	0038.192.35	
192	for hogger D=255	40 DKN	0038.192.46	

For more Fixmatic P quick clamping systems see page 389

Spare parts for Fixmatic P quick clamping system [0038]

Denomination	Order No.	Price [PG 02]
Pneumatic spiral hose	0038.000.05	

Spare segments and screws

Denomination	Order No.	PG	Price
HW segment with chip breaker; with threaded pin; Z2; 1 PU (= 12 pcs)	0033.012.01	01	
Threaded pin. 1 PU (= 24 pcs)	0033.024.02	01	
Screw (Torx) M5x12 SK10 for saw blade. 1 PU (= 50 pcs)	0031.050.02	03	
Screw (hexagon socket) M 8x16	0031.050.05	03	
Screw (countersunk) M 8x12,5	0031.050.06	03	
Torx screw driver T 20 suitable for screw (Torx) M5	10006041	02	

0033 AKE Segment hogger
with flange sleeve

Fig.: Right-hand design

Application:	For sizing panel material
Material:	Wood-based material, raw and coated
Machine:	Double-end profiler and edge bander
Design:	Hogger with steel body with inserted carbide-tipped segments with carbide tipped sawblade, flat teeth Mounted on flange sleeve
Tooth:	HW / DP on demand

D mm	B mm	d mm	Z	Tooth shape	Rhs / Lhs	Order No.	Price [PG 03]
205 / 200	20	35 DKN	44 / 12	F	lhs	0033.200.31	
205 / 200	20	35 DKN	44 / 12	F	rhs	0033.200.01	
205 / 200	40	35 DKN	44 / 24	F	lhs	0033.200.32	
205 / 200	40	35 DKN	44 / 24	F	rhs	0033.200.02	
205 / 200	60	35 DKN	44 / 36	F	lhs	0033.200.33	
205 / 200	60	35 DKN	44 / 36	F	rhs	0033.200.03	
205 / 200	20	35 DKN	60 / 12	F	lhs	0033.200.41	
205 / 200	20	35 DKN	60 / 12	F	rhs	0033.200.10	
205 / 200	40	35 DKN	60 / 24	F	lhs	0033.200.42	
205 / 200	40	35 DKN	60 / 24	F	rhs	0033.200.12	
205 / 200	60	35 DKN	60 / 36	F	lhs	0033.200.43	
205 / 200	60	35 DKN	60 / 36	F	rhs	0033.200.13	
255 / 250	20	35 DKN	48 / 18	F	lhs	0033.250.31	
255 / 250	20	35 DKN	48 / 18	F	rhs	0033.250.01	
255 / 250	40	35 DKN	48 / 36	F	lhs	0033.250.32	
255 / 250	40	35 DKN	48 / 36	F	rhs	0033.250.02	
255 / 250	60	35 DKN	48 / 54	F	lhs	0033.250.33	
255 / 250	60	35 DKN	48 / 54	F	rhs	0033.250.03	
255 / 250	20	35 DKN	60 / 18	F	lhs	0033.250.41	
255 / 250	20	35 DKN	60 / 18	F	rhs	0033.250.10	
255 / 250	40	35 DKN	60 / 36	F	lhs	0033.250.42	
255 / 250	40	35 DKN	60 / 36	F	rhs	0033.250.12	
255 / 250	60	35 DKN	60 / 54	F	lhs	0033.250.43	
255 / 250	60	35 DKN	60 / 54	F	rhs	0033.250.13	

0032 Spare parts for hoggers
suitable for AKE Segment hogger 0033

HW saw blade [0032]

10,5 mm countersunk (lhs = top counterclockwise, rhs = top clockwise)

D mm	B mm	b mm	d mm	NL mm	Z	Tooth shape	Rhs / Lhs	Order No.	Price [PG 01]
205	4,00	2,80	80	4/6/140	44	F	lhs	0032.201.01	
205	4,00	2,80	80	4/6/140	44	F	rhs	0032.202.01	
205	4,00	2,80	80	4/6/140	60	F	lhs	0032.203.01	
205	4,00	2,80	80	4/6/140	60	F	rhs	0032.204.01	
255	4,00	2,80	80	6/6/190	48	F	lhs	0032.251.02	
255	4,00	2,80	80	6/6/190	48	F	rhs	0032.252.02	
255	4,00	2,80	80	6/6/190	60	F	lhs	0032.253.02	
255	4,00	2,80	80	6/6/190	60	F	rhs	0032.254.02	

Hogger / extension

D mm	B mm	d mm	Z / Seg.	Tooth shape	Rhs / Lhs	Order No.	Price [PG 03]
200	18	80	12	F	rhs	0033.200.05	
200	18	80	12	F	lhs	0033.200.04	
250	18	80	18	F	rhs	0033.250.05	
250	18	80	18	F	lhs	0033.250.04	

Spare flange sleeve

D mm	d mm	for hogger bore mm	Order No.	Price [PG 03]
115	35 DKN	80	0033.000.02	
115	40 DKN	80	0033.000.01	

Spare segments and screws

Denomination	Order No.	PG	Preis
HW segment with chip breaker; with threaded pin; Z2; 1 PU (= 12 pcs)	0033.012.01	01	
Threaded pin. 1 PU (= 24 pcs)	0033.024.02	01	
Screw (Torx) M5x12 SK10 for saw blade. 1 PU (= 50 pcs)	0031.050.02	03	
Screw (hexagon socket) M 8x16	0031.050.05	03	
Schraube (countersunk) M 8x12,5	0031.050.06	03	
Torx screw driver T 20 suitable for screw (torx) M5	10006041	02	

0033 / 7033 AKE Vario hogger
with flange sleeve

Fig.: Right-hand design

Application:	For sizing panel material; for sizing of derived timber material on multi-rip saw without flange sleeve
Material:	Solid wood, wood-based material, raw and coated
Machine:	Double-end profiler, multi-rip machines
Design:	Hogger with steel body; saw blade one-side acute with axial angle for improved chip removal; 3-piece-design
Tooth:	DP, HW

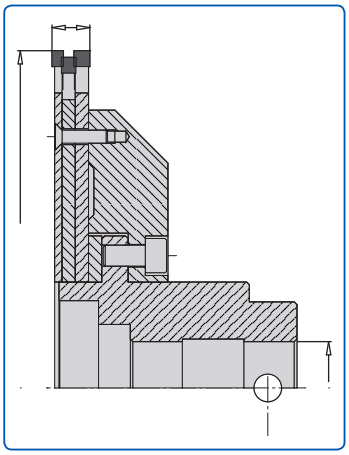

D mm	B mm	d mm	Z	Tooth shape	Quality	Rhs / Lhs	DT	Order No.	Price [PG 03]
255	14,40	35	48 / 12 / 6	F	DP	lhs	◊	7033.256.81	
255	14,40	35	48 / 12 / 6	F	DP	rhs	◊	7033.256.80	
255	14,40	40	48 / 12 / 6	F	HW	lhs		0033.257.81	
255	14,40	40	48 / 12 / 6	F	HW	rhs		0033.257.80	
255	14,40	40	48 / 12 / 6	F	DP	lhs	◊	7033.258.81	
255	14,40	40	48 / 12 / 6	F	DP	rhs	◊	7033.258.80	
255	14,40	35	48 / 12 / 6	F	HW	lhs		0033.255.81	
255	14,40	35	48 / 12 / 6	F	HW	rhs		0033.255.80	
255	14,40	35	60 / 12 / 6	F	DP	lhs	◊	7033.256.83	
255	14,40	35	60 / 12 / 6	F	DP	rhs	◊	7033.256.82	
255	14,40	40	60 / 12 / 6	F	HW	lhs		0033.257.83	
255	14,40	40	60 / 12 / 6	F	HW	rhs		0033.257.82	
255	14,40	40	60 / 12 / 6	F	DP	lhs	◊	7033.258.83	
255	14,40	40	60 / 12 / 6	F	DP	rhs	◊	7033.258.82	
255	14,40	35	60 / 12 / 6	F	HW	lhs		0033.255.83	
255	14,40	35	60 / 12 / 6	F	HW	rhs		0033.255.82	

0032 | 0033 Spare parts for hoggers
suitable for AKE Vario hogger

HW saw blade [0032]

10,5 mm countersunk (lhs = top counterclockwise, rhs = top clockwise)

D mm	B mm	b mm	d mm	pin hole mm	Z	Tooth shape	Rhs / Lhs	DT	Order No.	Price [PG 01]
255	4,00	2,80	30	12/6/190	48	E, AW	lhs		0032.255.81	
255	4,00	2,80	30	12/6/190	48	E, AW	rhs		0032.255.80	
255	4,00	2,80	30	12/6/190	60	E, AW	lhs		0032.255.83	
255	4,00	2,80	30	12/6/190	60	E, AW	rhs		0032.255.82	
255	4,00	2,80	80	12/6/190	48	E, AW	lhs		0032.255.85	
255	4,00	2,80	80	12/6/190	48	E, AW	rhs		0032.255.84	
255	4,00	2,80	80	12/6/190	60	E, AW	lhs		0032.255.87	
255	4,00	2,80	80	12/6/190	60	E, AW	rhs		0032.255.86	

HW hogger saw blade [0033]

D mm	B mm	b mm	d mm	pin hole mm	Z	Tooth shape	Rhs / Lhs	DT	Order No.	Price [PG 01]
250	5,50	5,00	30	12/6/190	12	F, AW	lhs		0033.250.81	
250	5,50	5,00	30	12/6/190	12	F, AW	rhs		0033.250.82	
250	5,50	5,00	80	12/6/190	12	F, AW	lhs		0033.250.84	
250	5,50	5,00	80	12/6/190	12	F, AW	rhs		0033.250.86	
255	7,00	5,00	30	12/6/190	6	F, AW	lhs		0033.255.85	
255	7,00	5,00	30	12/6/190	6	F, AW	rhs		0033.255.84	
255	7,00	5,00	80	12/6/190	6	F, AW	lhs		0033.255.89	
255	7,00	5,00	80	12/6/190	6	F, AW	rhs		0033.255.88	

DP saw blade [7032]

10,5 mm countersunk (lhs = top counterclockwise, rhs = top clockwise)

D mm	B mm	b mm	d mm	pin hole mm	Z	Tooth shape	Rhs / Lhs	DT	Order No.	Price [PG 03]
255	4,30	2,80	80	12/5,5/190	36	F, AW	lhs	◊	7032.255.87	
255	4,30	2,80	80	12/5,5/190	36	F, AW	rhs	◊	7032.255.86	
255	4,30	2,80	80	12/6/190	48	F, AW	lhs	◊	7032.255.81	
255	4,30	2,80	80	12/6/190	48	F, AW	rhs	◊	7032.255.82	
255	4,30	2,80	80	12/6/190	60	F, AW	lhs	◊	7032.255.83	
255	4,30	2,80	80	12/6/190	60	F, AW	rhs	◊	7032.255.84	

DP hogger saw blade [7033]

D mm	B mm	b mm	d mm	pin hole mm	Z	Tooth shape	Rhs / Lhs	DT	Order No.	Price [PG 03]
250	5,50	5,00	80	12/6/190	12	F, AW	lhs	◊	7033.250.81	
250	5,50	5,00	80	12/6/190	12	F, AW	rhs	◊	7033.250.82	
255	6,00	5,00	80	12/6/190	6	F, AW	lhs	◊	7033.255.83	
255	6,00	5,00	80	12/6/190	6	F, AW	rhs	◊	7033.255.84	
260	5,00	4,00	80	12/6/190	6	F, AW	lhs	◊	7033.260.85	
260	5,00	4,00	80	12/6/190	6	F, AW	rhs	◊	7033.260.86	

Flange sleeve

suitable for segment hoggers, vario hoggers and saw blade segment hoggers

D mm	d mm	for hogger bore mm	Order No.	Price [PG 03]
115	35 DKN	80	0033.000.02	
115	40 DKN	80	0033.000.01	

0033 Saw blade segment hogger
Hogger with flange sleeve

Fig.: Right-hand design

Kompatibel:	Leuco • = also suitable for AKE system
Application:	Sizing of wood-based material with scoring, hogging and double-hogging
Material:	Wood-based material, raw and coated
Machine:	Double-end profiler and edge bander
Design:	Hogger with steel body and reversible HW segments Segments with axial angle for optimized chip removal; with HW saw blade (flat tooth)
Tooth:	HW

D mm	B mm	d mm	Z	Tooth shape	Rhs / Lhs	Order No.	Price [PG 03]
250	18	35 DKN	48 + 6x4	F	lhs	0033.251.31	
250	18	35 DKN	48 + 6x4	F	rhs	0033.251.01	
250	18	40 DKN	48 + 6x4	F	lhs	0033.252.41	
250	18	40 DKN	48 + 6x4	F	rhs	0033.252.10	

Built-up hogger applied to increase the kerf to 36 mm
by means of HW segments

D mm	B mm	d mm	Z	Tooth shape	Rhs / Lhs	Order No.	Price [PG 03]
250	18	80	6x4	F	lhs	0033.249.00	
250	18	80	6x4	F	rhs	0033.249.01	

With bayonet fitting for Fixmatic P quick clamping system D 192 mm
with HW segments and HW saw blade

D mm	B mm	d mm	Z	Tooth shape	Rhs / Lhs	Order No.	Price [PG 03]
250	18	80	48 + 6x4	F	lhs	0033.249.20	
250	18	80	48 + 6x4	F	rhs	0033.249.21	
250	18	80	72 + 6x4	F	lhs	0033.249.24	
250	18	80	72 + 6x4	F	rhs	0033.249.25	

Flange sleeve
suitable for segment hoggers, vario hoggers and saw blade segment hogger

D mm	d mm	for hogger bore mm	Order No.	Price [PG 03]
115	35 DKN	80	0033.000.02	
115	40 DKN	80	0033.000.01	

0032 | 7033 Spare parts for hoggers
suitable for saw blade segment hoggers

HW saw blade [0032]

10,5 mm countersunk (lhs = top counterclockwise, rhs = top clockwise)

	D mm	B mm	b mm	d mm	pin hole mm	Z	Tooth shape	Rhs / Lhs	DT	Order No.	Price [PG 01]
	200	4,00	2,80	80	4/6/140	44/40	F	lhs		0032.201.40	
	200	4,00	2,80	80	4/6/140	44/40	F	rhs		0032.202.40	
	200	4,00	2,80	80	4/6/140	64/60	F	lhs		0032.203.40	
	200	4,00	2,80	80	4/6/140	64/60	F	rhs		0032.204.40	
	220	4,00	2,80	80	6/6/154	60	F, AW	lhs		0032.221.41	
	220	4,00	2,80	80	6/6/154	60	F, AW	rhs		0032.222.41	
•	250	4,00	2,80	80	6/6/200	54/48	F	lhs		0032.250.08	
•	250	4,00	2,80	80	6/6/200	54/48	F	rhs		0032.250.09	
•	250	4,00	2,80	80	6/6/200	78/72	F	lhs		0032.251.80	
•	250	4,00	2,80	80	6/6/200	78/72	F	rhs		0032.250.80	
•	250	4,00	2,80	100	6/6/200	78/72	F	lhs		0032.251.10	
•	250	4,00	2,80	100	6/6/200	78/72	F	rhs		0032.250.10	
	255	4,00	2,80	100	6/6/200	54/48	F	lhs		0032.255.41	
	255	4,00	2,80	100	6/6/200	54/48	F	rhs		0032.256.41	
	255	4,00	2,80	80	6/6/200	60/54	F	lhs		0032.257.41	
	255	4,00	2,80	80	6/6/200	60/54	F	rhs		0032.258.41	

DP saw blade [7032]

10,5 mm countersunk (lhs = top counterclockwise, rhs = top clockwise)

	D mm	B mm	b mm	d mm	pin hole mm	Z	Tooth shape	Rhs / Lhs	DT	Order No.	Price [PG 03]
•	250	4,00	2,80	80	6/6,5/200 6/16/188	36	F, AW	lhs	◊	7032.250.07	
•	250	4,00	2,80	80	6/6,5/200 6/16/188	36	F, AW	rhs	◊	7032.250.08	
•	250	4,00	2,80	80	6/6/200 6/16/188	54/48	F, AW	lhs	◊	7032.250.09	
•	250	4,00	2,80	80	6/6/200 6/16/188	54/48	F, AW	rhs	◊	7032.250.11	
•	250	4,00	2,80	80	6/6,5/200 6/16/188	66/60	F, AW	lhs	◊	7032.250.21	
•	250	4,00	2,80	80	6/6,5/200 6/16/188	66/60	F, AW	rhs	◊	7032.250.22	
•	250	4,00	2,80	80	6/6/200 6/16/188	78/72	F, AW	lhs	◊	7032.250.23	
•	250	4,00	2,80	80	6/6/200 6/16/188	78/72	F, AW	rhs	◊	7032.250.24	

Spare hogger segment for saw blade segment hoggers

		D mm	Z	Tooth shape	Rhs / Lhs	Order No.	Price [PG 01]
	•	200	4	F		0452.000.04	
☐	•	200/250	4	F, AW	lhs	0452.002.04	
☐	•	200/250	4	F, AW	rhs	0452.001.04	
		250	4	F		0452.000.07	
☐		250	4	unpolished	lhs	0452.012.04	
☐		250	4	unpolished	rhs	0452.011.04	
		300	8	F	lhs	0453.002.08	
		300	8	F	rhs	0453.001.08	
		300	10	F	lhs	0453.002.20	
		300	10	F	rhs	0453.001.20	
		350/430	8	F	lhs	0453.502.08	
		350/430	8	F	rhs	0453.501.08	
		350/430	10	F	lhs	0453.502.10	
		350/430	10	F	rhs	0453.501.10	

0032 Spare circular saw blade
without pin holes

Spare HW saw blade without pin holes

For universal application even with external brands. Please indicate the type and brand of the hogger in order to match the pin holes and gaps

D mm	B mm	b mm	d mm	Z	Tooth shape	Order No.	Price [PG 01]
205	4,00	2,80	80	44	F	0032.202.00	
205	4,00	2,80	80	60	F	0032.204.00	
210	4,00	2,80	80	44	F	0032.212.00	
210	4,00	2,80	80	60	F	0032.214.00	
255	4,00	2,80	80	48	F	0032.252.00	
255	4,00	2,80	80	60	F	0032.254.00	
260	4,00	2,80	80	48	F	0032.266.00	
260	4,00	2,80	80	60	F	0032.268.00	
260	4,00	2,80	80	72	F	0032.260.10	

0030 0031 Scoring saw blade

Scoring saw blade with flange sleeve

Fig.: Left-hand design

Application:	For scoring in feed direction to produce clean edges
Material:	Wood-based material, raw and coated
Machine:	Double-end profiler, edge-bander
Design:	Scoring saw blade with flange sleeve; suitable for Homag, IMA, Torwegge
Tooth:	HW, DP

D mm	B mm	b mm	d mm	Z	Tooth shape	Rhs / Lhs	DT	Order No.	Price [PG 03]
180	3,20	2,20	30 DKN	42	F	lhs		0031.751.14	
180	3,20	2,20	30 DKN	42	F	rhs		0031.751.15	
180	3,20	2,20	30 DKN	54	F	lhs		0031.750.14	
180	3,20	2,20	30 DKN	54	F	rhs		0031.750.15	

Spare HW and DP saw blade

DP tip height 5 mm. Suitable for scoring saw blade with flange sleeve

D mm	B mm	b mm	d mm	Z	Tooth shape	Quality	Rhs / Lhs	DT	Order No.	PG	Price
180	3,20	2,20	65	36	F	DP	lhs	◊	7030.180.10	03	
180	3,20	2,20	65	36	F	DP	rhs	◊	7030.180.11	03	
180	3,20	2,20	65	42	F	HW	lhs		0030.180.08	01	
180	3,20	2,20	65	42	F	HW	rhs		0030.180.09	01	
180	3,20	2,20	65	42	F	DP	lhs	◊	7030.180.08	03	
180	3,20	2,20	65	42	F	DP	rhs	◊	7030.180.09	03	
180	3,20	2,20	65	48	F	DP	lhs	◊	7030.180.06	03	
180	3,20	2,20	65	48	F	DP	rhs	◊	7030.180.07	03	
180	3,20	2,20	65	54	F	HW	lhs		0030.180.06	01	
180	3,20	2,20	65	54	F	HW	rhs		0030.180.07	01	

Flange sleeve

suitable for scoring saw blade

D mm	d mm	for hogger bore mm	Order No.	Price [PG 02]
108	30 DKN	65	0031.000.14	

Spare screw

Denomination	Order No.	PG	Price
Screw (Torx) M5x12 SK9 for saw blade; 1 PU (= 50 pcs.)	0031.050.01	03	
Screw (Torx) M5x12 SK10 for saw blade; 1 PU (= 50 pcs.)	0031.050.02	03	
Handle key T 20 for (Torx) screw M5	10006041	02	

0038 Scoring saw blade

Scoring saw blade with Fixmatic P quick clamping system

Fig.: Left-hand design

Application:	For scoring in feed direction to produce clean edges
Material:	Wood-based material, raw and coated
Machine:	Double-end profiler, edge bander
Design:	Scoring saw blade with Fixmatic P quick clamping system and clamping flange
Tooth:	HW

D mm	B mm	b mm	d mm	Z	Tooth shape	Rhs / Lhs	Order No.	Price [PG 03]
180	3,20	2,20	30 DKN	30	F	lhs	0038.180.31	
180	3,20	2,20	30 DKN	30	F	rhs	0038.180.32	
180	3,20	2,20	30 DKN	42	F	lhs	0038.181.31	
180	3,20	2,20	30 DKN	42	F	rhs	0038.181.32	
180	3,20	2,20	30 DKN	54	F	lhs	0038.182.31	
180	3,20	2,20	30 DKN	54	F	rhs	0038.182.32	
200	3,20	2,20	30 DKN	48	F	lhs	0038.200.31	
200	3,20	2,20	30 DKN	48	F	rhs	0038.200.32	
200	3,20	2,20	30 DKN	60	F	lhs	0038.201.31	
200	3,20	2,20	30 DKN	60	F	rhs	0038.201.32	

Fixmatic P quick clamping system

suitable for scoring saw blade for Fixmatic P quick clamping system

D mm	d mm	for bore mm	Order No.	Price [PG 02]
110	30 DKN	50	0038.110.30	

Clamping flange

suitable for Fixmatic P quick clamping system

D mm	d mm	for bore mm	Order No.	Price [PG 02]
110	between clamping flange (interior)	rhs or lhs	0038.110.49	
110	before clamping flange (exterior)	lhs	0038.110.51	
110	before clamping flange (exterior)	rhs	0038.110.52	

0030 Scoring saw blade

Spare scoring saw blade for AKE and other systems

Application:	For scoring and sizing
Material:	Wood-based material, raw and coated
Machine:	Double-end profiler, edge bander
Design:	Partly suitable for AKE / Leuco quick clamping system
Tooth:	HW

	D mm	B mm	b mm	d mm	pin hole mm	Z	Tooth shape	Order No.	Price [PG 01]
	150	3,20	2,20	30		30	F	0030.150.30	
	150	3,20	2,20	30		48	F	0030.150.31	
	180	3,20	2,20	30		30	F	0030.180.34	
*	180	3,20	2,20	50	3/22/80 3/6/80	30	F	0030.180.51	
	180	3,20	2,20	30		42	F	0030.180.33	
*	180	3,20	2,20	50	3/22/80 3/6/80	42	F	0030.180.50	
	180	3,20	2,20	30		54	F	0030.180.31	
*	180	3,20	2,20	50	3/22/80 3/6/80	54	F	0030.180.52	
	200	3,20	2,20	30		36	F	0030.200.30	
	200	3,20	2,20	30		48	F	0030.200.31	
*	200	3,20	2,20	50	3/22/80 3/6/80	48	F	0030.200.51	
	200	3,20	2,20	30		60	F	0030.200.33	
*	200	3,20	2,20	50	3/22/80 3/6/80	60	F	0030.200.53	
	255	3,20	2,20	30		60	F	0030.255.31	
	305	3,20	2,20	30		54	F	0030.305.31	

*Suitable for AKE and Leuco quick clamping systems

Shank type cutters

Content

Shank type cutters

Products	Page
Solid carbide roughing cutter	214-216
Solid carbide lockset cutters	217
Solid carbide roughing and smoothing	218-220
Solid carbide finishing cutter	221-226
HS copy cutter	227
Trimming cutter	228-231
Grooving and planing cutter	232, 262-263
Cutterhead with reversible T.C. tips	233-234
Grooving cutter	235-243
Folding cutter with reversible T.C. tips	244
Dovetail cutter	245
Solid carbide grooving cutter	246
Grooving cutter with reversible T.C. tips	247-251
Lockset cutters with reversible T.C. tips	252
Rounding cutter	253-259
Profile cutter	260 - 261
HS water slot cutter	264

43070 I Solid HW roughing cutter

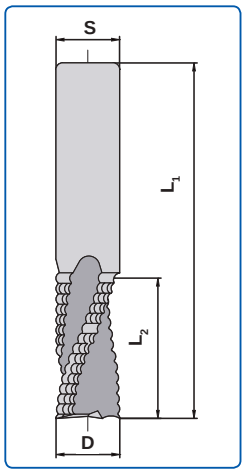

Right-hand rotation / positive spiral - Z 2

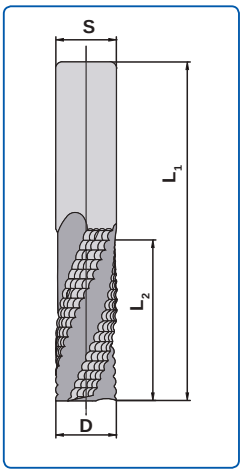

Right-hand rotation / positive spiral - Z 3

Application:	For pre-cuts
Design:	Solid HW roughing cutter with spiral knives and serrated knife design
Material:	Wood and wood-based panel material
Machine:	Stationary machines with and without tool changer
Feed:	MEC

Right-hand rotation / positive spiral - Z 2

	D mm	L2 mm	L1 mm	Shank mm	Z	Order No.	Price [PG 02]
TOP	6	20	60	6	2	10107183	
TOP	8	25	80	8	2	10018734	
TOP	10	30	75	10	2	10014613	
TOP	12	42	90	12	2	10014614	
TOP	14	35	80	14	2	10014615	
TOP	16	35	90	16	2	10014616	
TOP	16	55	110	16	2	10014617	
TOP	18	55	115	18	2	10014618	
TOP	20	55	115	20	2	10014619	

Right-hand rotation / positive spiral - Z 3

	D mm	L2 mm	L1 mm	Shank mm	Z	Order No.	Price [PG 02]
TOP	12	42	90	12	3	10014620	
TOP	14	35	90	14	3	10014621	
TOP	14	55	110	14	3	10014622	
TOP	16	35	90	16	3	10014623	
TOP	16	55	110	16	3	10014624	
TOP	18	55	115	18	3	10014625	
TOP	18	55	135	25	3	10014630*	
TOP	20	55	115	20	3	10014626	
TOP	20	60	120	20	3	10014628	
TOP	20	75	135	20	3	10014627	
TOP	20	90	155	20	3	10014631	
TOP	25	100	155	25	3	10014686	

* with brazed shank
Further dimensions and special design, e.g. face-radius on request

43070 I Solid HW roughing cutter

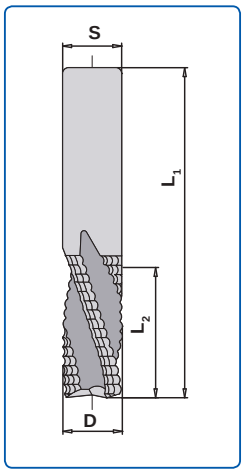

Right-hand rotation / negative spiral - Z 2

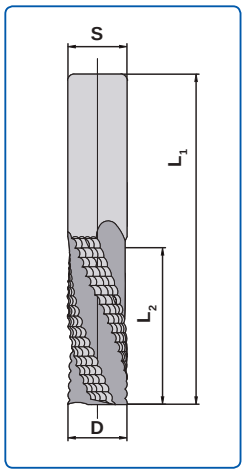

Left-hand rotation / negative spiral - Z 3

Application:	For pre-cuts
Design:	Solid HW roughing cutter with spiral knives and serrated knife design
Material:	Wood and wood-based panel material
Machine:	Stationary machines with and without tool changer
Feed:	MEC

Right-hand rotation / negative spiral - Z 2

	D mm	L2 mm	L1 mm	Shank mm	Z	Order No.	Price [PG 02]
TOP	10	30	75	10	2	10014632	
TOP	16	55	110	16	2	10014633	

Right-hand rotation / negative spiral - Z 3

	D mm	L2 mm	L1 mm	Shank mm	Z	Order No.	Price [PG 02]
TOP	12	42	90	12	3	10014635	
TOP	14	35	90	14	3	10014636	
TOP	16	35	90	16	3	10014638	
TOP	16	55	110	16	3	10014639	
TOP	18	55	115	18	3	10014640	
TOP	20	55	115	20	3	10014641	

Left-hand rotation / negative spiral - Z 3

	D mm	L2 mm	L1 mm	Shank mm	Z	Order No.	Price [PG 02]
TOP	20	55	115	20	3	10017301	

Further dimensions on request

43070 Solid HW roughing cutter
PLT coating

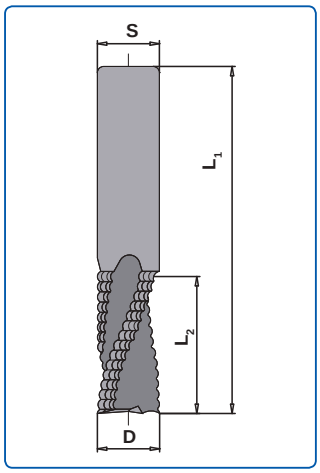

Application:	For pre-cuts
Design:	Solid HW roughing cutter with spiral knives and serrated knife design Special PLT coating for prolonged tool service life
Material:	Wood and wood-based panel material
Machine:	Stationary machines with and without tool changer
Feed:	MEC

Right-hand rotation / positive spiral - Z 2

	D mm	L2 mm	L1 mm	Shank mm	Z	Order No.	Price [PG 02]
TOP	8	25	80	8	2	10153902	

Right-hand rotation / positive spiral - Z 3

	D mm	L2 mm	L1 mm	Shank mm	Z	Order No.	Price [PG 02]
TOP	12	42	90	12	3	10153911	
TOP	14	55	110	14	3	10153912	
TOP	16	55	110	16	3	10153913	
TOP	20	60	120	20	3	10153914	

43070 I Lockset Cutter - solid HW

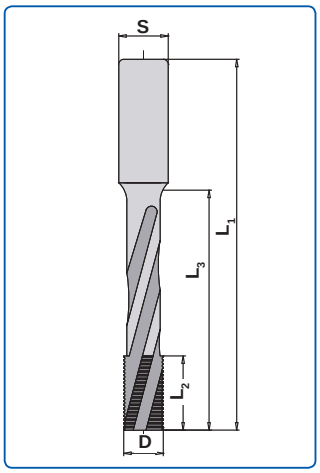

Application:	For lock-cases
Design:	Solid carbide roughing cutter with stepped shank Roughing design ensures smooth cutting, the spiral gullet provides maximum chip removal
Material:	Wood and wood-based panel material
Machine:	Stationary machines with and without tool changer
Feed:	MEC

	D mm	L2 mm	L3 mm	L1 mm	Shank mm	Z	Order No.	Price [PG 02]
TOP	14	15	110	155	14	2	10014558	
TOP	16	25	130	175	16	2	10014559	
TOP	18	25	130	175	18	2	10014560	
TOP	16	30	115	170	16	3	10014561	
TOP	16	30	115	175	20	3	10014562	
TOP	18	30	120	170	20	3	10014563	

TOK lock-set cutter, see page 252

Solid wood: adjustable at up to 8 mm / stroke
Chip board: adjustable at up to 15 mm / stroke
Vf 10 - 18 m/min

Please note: Weldon clamping surfaces can be applied on request;
please advise the machine type or aggregate type

43070 Solid carbide roughing and smoothing cutter- *smartline*

for lock case cutting, PLT coating

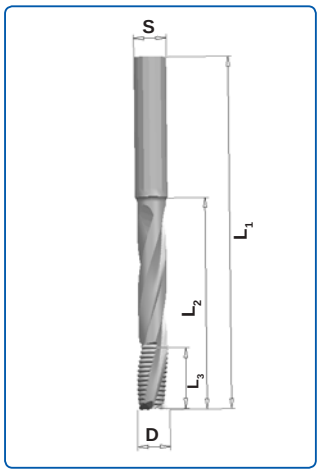

Application:	Production of lock cases
Design:	Solid carbide cutter with new roughing-smoothing tooth design and PLT coating. The new tooth design reduces the cutting pressure considerably if compared to the conventional smoothing cutter geometry. On the other hand there will be hardly any marks compared to the roughing cutter tooth design. Thanks to the PLT coating the service life is much longer and the friction at the same time minimized. The feed rate as well as overall performance can thus be clearly increased.
Material:	Solid wood, wood-based material, plastic material
Machine:	Stationary machines with and without tool changer
Feed:	MEC

	D mm	L3 mm	L2 mm	L1 mm	Shank mm	Z	DT	Order No.	Price [PG 02]
TOP	16	30	95	170	16x50	3	◊	10190167	
TOP	16	30	115	175	16x50	3		10190168	
TOP	16	30	115	175	20x50	3	◊	10190169	

TOK lock-set cutter, see page 252

Solid wood: adjustable at up to 8 mm / stroke
Chip board: adjustable at up to 15 mm / stroke
Vf 10 - 18 m/min

Please note: Weldon clamping surfaces can be applied on request; please advise the machine type or aggregate type

43070 Solid carbide roughing and smoothing cutter
for door handle hole and lock barrel, PLT coating

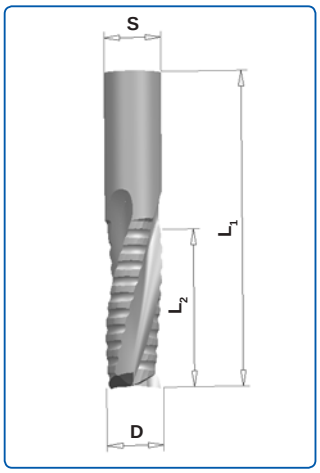

Application:	Cut-off and sizing cutter
Design:	Solid carbide cutter with new roughing-smoothing tooth design and PLT coating. The new tooth design reduces the cutting pressure considerably if compared to the conventional smoothing cutter geometry. On the other hand there will be hardly any marks compared to the roughing cutter tooth design. Thanks to the PLT coating the service life is much longer and the friction at the same time minimized. The feed rate as well as overall performance can thus be clearly increased.
Material:	Solid wood, wood-based material, plastic material
Machine:	Stationary machines with and without tool changer
Feed:	MEC

Short version

	D mm	L2 mm	L1 mm	Shank mm	Z	DT	Order No.	Price [PG 02]
TOP	10	25	70	10x40	2	◊	10190153	
TOP	12	25	70	12x40	2	◊	10190154	
TOP	12	25	70	12x40	3		10190155	
TOP	18	50	115	18x50	3	◊	10190156	
TOP	20	50	115	20x50	3	◊	10190157	

Long version

	D mm	L2 mm	L1 mm	Shank mm	Z	DT	Order No.	Price [PG 02]
TOP	8	25	80	8x40	2	◊	10190163	
TOP	12	42	90	12x40	3	◊	10190164	
TOP	16	55	115	16x50	3		10190165	
TOP	20	75	135	20x50	3		10190166	

43070 Solid carbide roughing and smoothing cutter - *smartline*

For door handle hole and spyhole, PLT coating

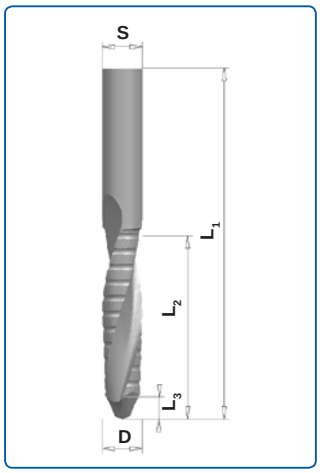

Application:	Production of door handle hole and spyhole
Design:	Solid carbide cutter with new roughing-smoothing tooth design and PLT coating. The new tooth design reduces the cutting pressure considerably if compared to the conventional smoothing cutter geometry. On the other hand there will be hardly any marks compared to the roughing cutter tooth design. Thanks to the PLT coating the service life is much longer and the friction at the same time minimized. The feed rate as well as overall performance can thus be clearly increased.
Material:	Solid wood, wood-based material, plastic material
Machine:	Stationary machines with and without tool changer
Feed:	MEC

	D mm	L3 mm	L2 mm	L1 mm	Shank mm	Z	DT	Order No.	Price [PG 02]
TOP	12	4	75	120	12x40	2	◊	10190171	
TOP	16	9	73	140	16x50	2	◊	10190172	
TOP	16	9	105	170	16x50	2	◊	10190173	

43070 I Solid HW finishing cutter

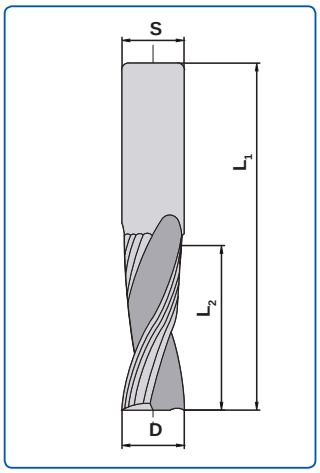

Application:	For high performance finishing cuts (smoothing)
Design:	Solid HW finishing cutter with spiral knives
Material:	Wood and wood-based panel material
Machine:	CNC machines
Feed:	MEC

Right-hand rotation / positive spiral - Z 2

	D mm	L2 mm	L1 mm	Shank mm	Z	Order No.	Price [PG 02]
TOP	5	18	50	5	2	10015649	
TOP	6	20	60	6	2	10014978	
TOP	8	25	80	8	2	10014579	
TOP	8	32	80	8	2	10014580	
TOP	10	30	75	10	2	10014581	
TOP	12	42	90	12	2	10014582	
TOP	14	35	80	14	2	10014583	
TOP	14	50	100	14	2	10014584	
TOP	16	35	90	16	2	10014585	
TOP	16	55	110	16	2	10014586	
TOP	18	55	115	18	2	10014587	
TOP	20	55	115	20	2	10014588	

Right-hand rotation / positive spiral - Z 3

	D mm	L2 mm	L1 mm	Shank mm	Z	Order No.	Price [PG 02]
TOP	12	42	90	12	3	10014589	
TOP	14	35	90	14	3	10014590	
TOP	14	55	110	14	3	10014591	
TOP	16	35	90	16	3	10014592	
TOP	16	55	110	16	3	10014593	
TOP	18	55	115	18	3	10014594	
TOP	20	55	115	20	3	10014595	
TOP	20	60	120	20	3	10014597	
TOP	20	75	135	20	3	10014596	
TOP	20	90	155	20	3	10014598	

Other dimensions, e.g. with face radius available on request

43070 I Solid HW finishing cutter

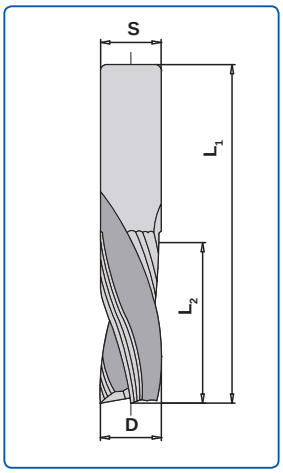

Right-hand rotation / negative spiral - Z 2

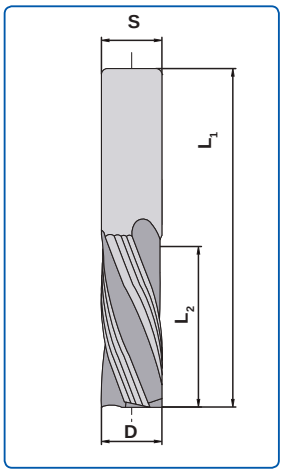

Left-hand rotation / negative spiral - Z 3

Application:	For high performance finishing cuts (smoothing)
Design:	Solid HW finishing cutter with spiral knives
Material:	Wood and wood-based panel material
Machine:	CNC machines
Feed:	MEC

Right-hand rotation / negative spiral - Z 2

	D mm	L2 mm	L1 mm	Shank mm	Z	Order No.	Price [PG 02]
TOP	8	25	80	8	2	10014599	
TOP	10	30	75	10	2	10014600	
TOP	12	42	90	12	2	10014601	
TOP	16	55	110	16	2	10014602	
TOP	20	50	100	20	2	10014604	

Right-hand rotation / negative spiral - Z 3

	D mm	L2 mm	L1 mm	Shank mm	Z	Order No.	Price [PG 02]
TOP	12	42	90	12	3	10014605	
TOP	14	35	80	14	3	10014606	
TOP	14	55	100	14	3	10014607	
TOP	16	35	90	16	3	10014608	
TOP	16	55	110	16	3	10014609	
TOP	18	35	80	18	3	10014610	
TOP	18	55	115	18	3	10014611	
TOP	20	55	115	20	3	10014612	

Left-hand rotation / negative spiral - Z 3

	D mm	L2 mm	L1 mm	Shank mm	Z	Order No.	Price [PG 02]
TOP	20	55	115	20	3	10014866	

Further dimensions on request

43070 Solid HW finishing cutter
PLT coating

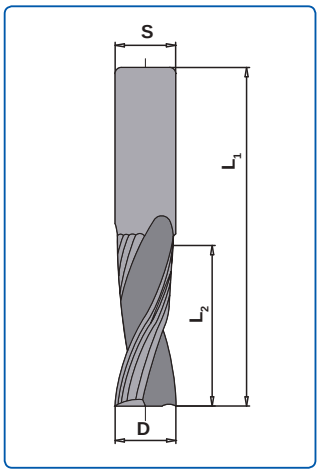

Application:	For high performance finishing cuts (smoothing)
Design:	Solid HW finishing cutter with spiral knives Special PLT coating for a longer tool service life
Material:	Wood and wood-based panel material
Machine:	Stationary machines with and without tool changer
Feed:	MEC

Right-hand rotation / positive spiral - Z 2

	D mm	L2 mm	L1 mm	Shank mm	Z	Order No.	Price [PG 02]
TOP	8	32	80	8	2	10153916	
TOP	10	30	75	10	2	10153917	

Right-hand rotation / positive spiral - Z 3

	D mm	L2 mm	L1 mm	Shank mm	Z	Order No.	Price [PG 02]
TOP	16	55	110	16	3	10153918	
TOP	20	60	120	20	3	10153920	

Further dimensions on request

43070 Solid HW roughing cutter
for door handle holes and spy holes

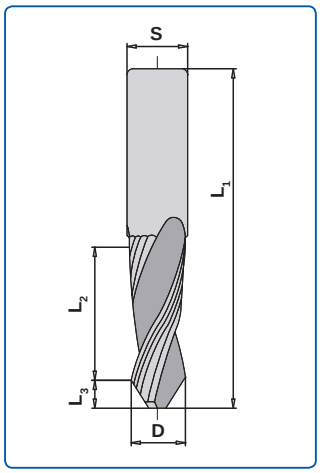

Application:	For spy holes and door handle holes, to be produced by drilling and spirale plunging
Design:	Solid HW finishing cutter with converted V tip
Material:	Wood-based panel material with and without coating, thermosetting plastic
Machine:	Stationary machines with and without tool changer
Feed:	MEC

	D mm	L3 mm	L2 mm	L1 mm	Shank mm	Z	Order No.	Price [PG 02]
TOP	12	9	47	110	12	2	10027500	
TOP	14	8	42	100	14	2	10014564	
TOP	16	9	51	120	16	2	10014565	
TOP	16	9	73	140	16	2	10014566	

43070 Solid HW finishing cutter
with alternating spiral, rh rotation

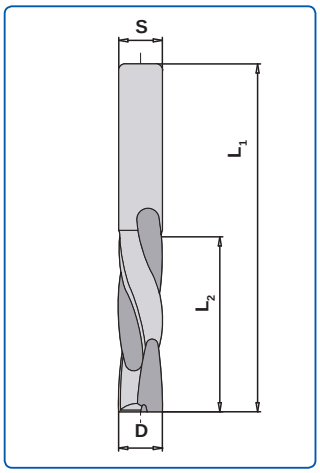

Application:	For high-quality sizing/ jointing cuts and finishing of workpiece edges, visible on both sides
Design:	Solid HW finishing cutter with alternating spiral
Material:	Wood and wood-based panel material with and without coating
Machine:	Stationary machines with and without tool changer
Feed:	MEC

	D mm	L2 mm	L1 mm	Shank mm	Z	Order No.	Price [PG 02]
TOP	8	22	80	8	2+2	10014570	
TOP	10	32	80	10	2+2	10014571	
TOP	12	42	100	12	2+2	10014572	
TOP	14	52	110	14	2+2	10022674	
TOP	16	42	105	16	2+2	10022676	
TOP	16	52	115	16	2+2	10022678	
TOP	18	52	125	18	2+2	10022680	
TOP	20	52	125	20	2+2	10022681	
TOP	20	72	145	20	2+2	10022683	

Further dimensions on request

43070 Solid HW finishing cutter
with alternating spiral, rh rotation, PLT coating

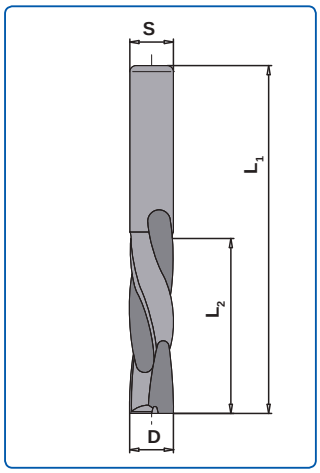

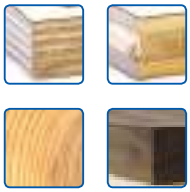

Application:	For high-quality sizing/ jointing cuts and finishing of workpiece edges, visible on both sides
Design:	Solid HW finishing cutter with alternating spiral knives Special PLT coating for a longer tool service life
Material:	Wood and wood-based panel material with and without coating
Machine:	Stationary machines with and without tool changer
Feed:	MEC

	D mm	L2 mm	L1 mm	Shank mm	Z	Order No.	Price [PG 02]
TOP	8	22	80	8	2+2	10153921	
TOP	10	32	80	10	2+2	10153922	
TOP	12	42	100	12	2+2	10153923	

Further dimensions on request

43070 | Solid HW copy cutter Z1
for aluminium and plastic processing

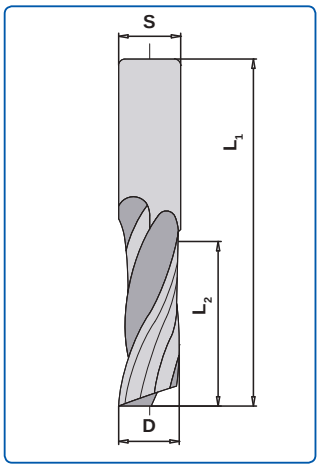

Application:	Cutting grooves, slots and clippings in aluminium and plastic material using copy routers such as e.g. Elumatec, Haffner, Rotox, Striffler, Wegoma, etc.
Design:	One spiral knife, solid HW Spiral knife (HS) Centre drill and side cutting. Rh rotation
Feed:	MEC

D mm	L2 mm	L1 mm	Shank mm	Order No.	Price [PG 02]
3	12	50	6	10004878	
4	12	60	6	10004879	
5	16	80	8	10111279	
5	20	90	8	10111280	
5	45	100	8	10111281	
6	17	60	6	10004881	
6	27	60	6	10111282	
6	40	80	6	10111284	
8	22	80	8	10111285	
8	32	80	8	10111286	
8	40	80	8	10111287	
10	32	80	10	10109844	

43030 | HS copy cutter Z1
one-piece version

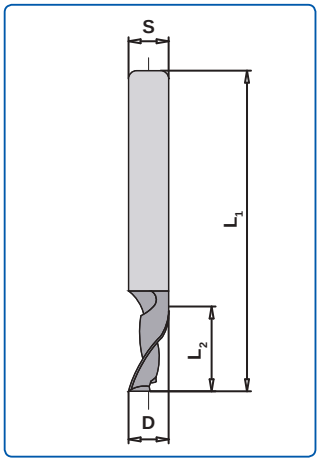

D mm	L2 mm	L1 mm	Shank mm	Order No.	Price [PG 02]
5	12	60	8	10004857	
5	14	120	8	10004860	

43010 Cutter for trimming and copy miling Z2

Ball bearing guide on shankside, removable shank

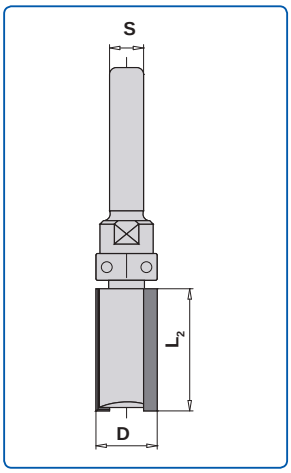

Application:	For copy-trimming with template and trimming of plastic/ veneer laminations; sizing and rebating
Design:	Periphery and side cutting exchangeable shank exchangeable ball bearing
Machine:	Router
Feed:	MAN

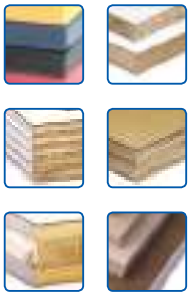

D mm	L2 mm	Shank mm	Order No.	Price [PG 02]
12,7	25	6	10110789	
12,7	25	8	10019815	
19,0	50	12	40013372	

Spare parts

Denomination	Dimension mm	Order No.	Price [PG 02]
Ball bearing	D=12,7, d=6,35	10018087	
Ball bearing	D=19, d=8,0	40013515	

43010 HW trimming cutter Z2

Ball bearing guide on faceside

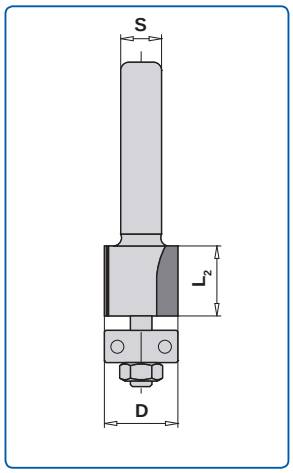

Application:	For trimming of plastic or veneer edges
Design:	Periphery and side cutting exchangeable ball bearing
Machine:	Router
Feed:	MAN

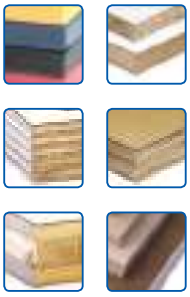

D mm	L2 mm	Shank mm	Order No.	Price [PG 02]
12,7	12	6	10003447	
12,7	12	8	10003452	
12,7	25	6	10003448	
12,7	25	8	10003453	
22,0	16	8	10003454	

Spare parts

Denomination	Dimension mm	Order No.	Price [PG 02]
Ball bearing	D=12,7, d=4,76	10005990	
Ball bearing	D=22, d=8,0	10006001	
Hex. nut	M4, for D=12,7	40013542	
Hex. nut	M6, for D=22,0	40013544	

43010 TOK trimming cutter
Ball bearing guide on faceside

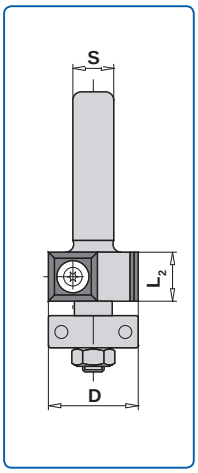

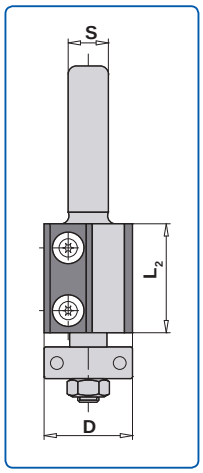

Application:	For square trimming of plastic laminated or veneered edges
Design:	TOK knives with replaceable ball bearing on the faceside
Machine:	Router
Feed:	MAN

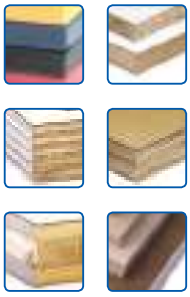

D mm	L2 mm	Shank mm	Order No.	Price [PG 02]
19	30	8	10003050	
19	30	12	10003055	
19	50	12	40015794	
22	12	8	10003051	
22	20	6	10003047	
22	20	8	10003052	

Spare parts

Denomination	Dimension mm	Order No.	PG	Price
TOP Reversible knife	12x12x1,5, Z4	10009450	02	
TOP Reversible knife	20x12x1,5, Z2	10009457	01	
TOP Reversible knife	30x12x1,5, Z2	10009464	01	
TOP Reversible knife	50x12x1,7, Z4, 3-hole-design.	10009526	01	
Ball bearing	D=19, d=6,35	10005995	02	
Ball bearing	D=22, d=7,0	10006000	02	
Torx screw	M4x5,9, Big head, T15	10006039	02	

43010 TOK trimming and rebating cutter

Ball bearing guide on shankside

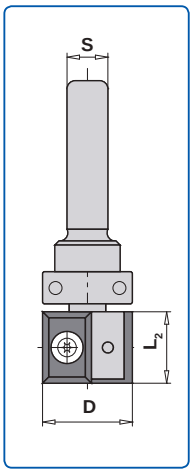

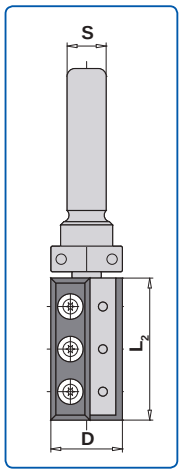

Application:	Copying with template For square trimming of plastic laminated or veneered edges, sizing, rebating
Design:	TOK with replaceable ball bearing on shank-side
Machine:	Router
Feed:	MAN

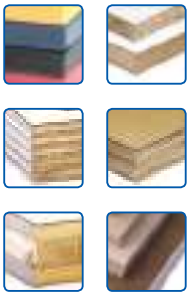

D mm	L2 mm	Shank mm	Order No.	Price [PG 02]
22	20	6	10003031	
22	20	8	10003033	
22	30	12	10003034	
22	50	12	10003035	

Spare parts

Denomination	Dimension mm	Order No.	PG	Price
Reversible knife	20x12x1,5, Z4	10009521	01	
TOP Reversible knife	30x12x1,5, Z4	10009523	01	
TOP Reversible knife	50x12x1,7, Z4, 3-hole design	10009526	01	
Ball bearing	D=22, d=8,0	10006001	02	
Torx screw	M4x5,9, Big head, T15	10006039	02	

43010 TOK grooving / planing cutter Z2+2
with boring tip

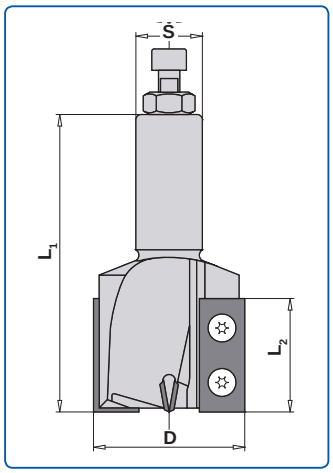

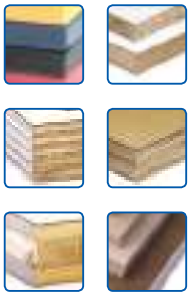

Application:	Grooving, rebating, jointing and planing, for axial plunge cutting operations exceeding a depth of 10 mm, the speed should be reduced to 12.000 rpm
Design:	HW TOK. Cutting on periphery and drilling Large chip clearance area for optimum chip clearance while plunging
	Right-hand rotation
Machine:	Stationary machines with and without tool changer
Feed:	MEC

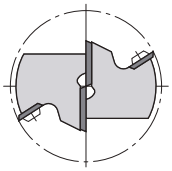

D mm	L2 mm	L1 mm	Shank mm	Order No.	Price [PG 02]
40	30	90	20x55	10018589	
40	30	90	25x55	10028291	
60	30	105	20x55	40013294	
60	30	105	25x55	10021796	
80	12	78	25x55	10017875	

Spare parts

	Denomination	Dimension mm	Order No.	PG	Price
TOP	TOK	12x12x1,5 Z4, for D=80, UMS / D=35/40, BOS	10009450	02	
TOP	TOK	20x12x1,5 Z2, for D=60, BOS	10009457	01	
TOP	TOK	30x12x1,5 Z2, for D=80, BOS	10009464	01	
TOP	TOK	30x12x1,5 Z4, for D=35/40/60, UMS	10009523	01	

UMS = peripheral knife
BOS = boring tip

43010 TOK swivelling cutterhead
Steplessly adjustable

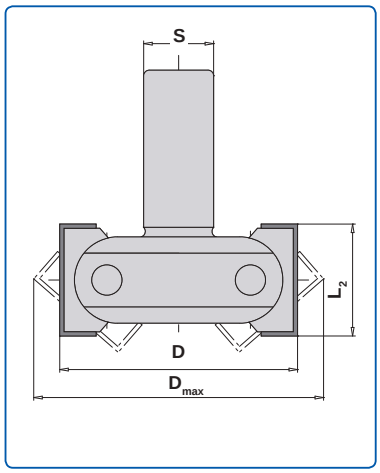

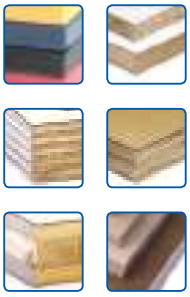

Application:	For jointing, rebating and bevelling
Design:	TOK in swivellable tip retainers, cutting on periphery and on both sides, swivelling range towards top 0 - 45°, towards bottom 0 - 90°, variable adjustment according to precise scale, with steps of 7,5°
Machine:	Stationary machines with and without tool changer
Feed:	MEC

D mm	D max mm	L2 mm	Shank mm	rhs/lhs	Order No.	Price [PG 02]
85	102	40	20x55	rhs	10002726	
85	102	40	25x55	rhs	10002727	
85	102	40	25x55	lhs	40010067	
110	134	50	20x55	rhs	10156537	
110	134	50	25x55	rhs	10156538	
110	134	50	25x55	lhs	10156539	

Spare parts

Denomination	Dimension mm	Order No.	Price [PG 01]
TOK	40x12x1,5 Z4	10009524	
TOK	50x12x1,5 Z4	10009525	
Threaded pin DIN 912	M5x16 DIN 912	10030678	
Threaded pin DIN 912	M6x8 DIN 915	10015777	

43010 TOK helical cutterhead Z2+2+V2
to be mounted on the arbour

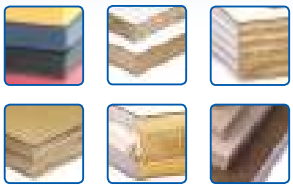

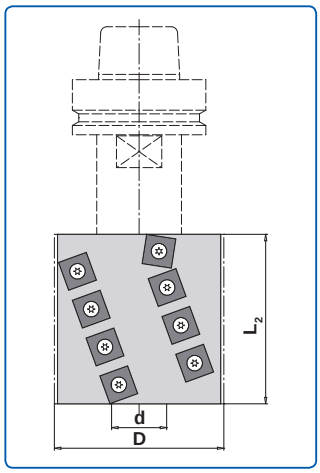

Special advantages:

- Perfect finish, through convex shaped tips, precisely positioned on the tool body
- the individual knives do not leave any marks on the surface
- Reduced noise level due to compact tool body
- Especially suitable for pre-cutting of arches in window production or curved stringboard in stair production

Application:	Pre-cutting and copy miling
Design:	Tool body of high-quality light metal with hard-anodized surface and specially convex ground reversible HW tips. Helically positioned tips. With two reversible HW spurs on bottom. Recessed on one side to take the end retaining screw. Right-hand rotation
Machine:	Stationary machines with and without tool changer
Feed:	MEC

D mm	L2 mm	d mm	KN	Z/AS mm	Order No.	Price [PG 02]
80	80/86	30	8x2	2/18	40012334	

Spare parts

	Denomination	Dimension mm	Order No.	PG	Price
TOP	TOK	15x15x2,5	10102511	01	
TOP	Spur	14x14x2,0	10009453	01	
	Intermediate ring	50x10,0x30 DKN	40013594	02	
	Intermediate ring	50x10,0x30 DKN	40013591	02	
	Torx-screw	M5x15,5 T20 (for TOK)	40012392	02	
	Torx-screw	M5x12 T20 (for spurs)	10111291	02	

Delivery without arbor (for arbors see page 369 and 378)
The total length and the measure A are determined by the arbor.

43010 HW grooving cutter Z2

Short design, shank 6 mm and 8 mm

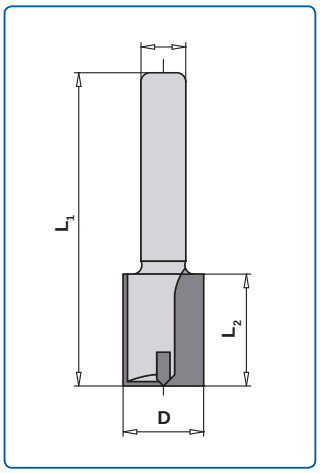

Application:	For rebating, grooving, jointing
Design:	HW boring tip rh rotation
Machine:	Router, stationary machines with and without tool changer
Feed:	MAN / MEC

D mm	L2 mm	L1 mm	Shank mm	Order No.	Price [PG 02]
3	8	37	6	10003643	
3	8	37	8	10003732	
4	10	40	6	10003644	
4	10	40	8	10003733	
5	12	45	6	10003645	
5	12	45	8	10003734	
6	16	45	6	10003646	
6	16	45	8	10003735	
8	20	48	6	10003648	
8	20	48	8	10003736	
8	30	58	6	10003649	
8	30	58	8	10003737	
10	20	48	6	10003650	
10	20	48	8	10003738	
10	30	58	6	10003651	
10	30	58	8	10003739	
12	20	48	6	10003653	
12	20	48	8	10003740	
12	30	58	8	10003741	
14	20	48	6	10003656	
14	20	48	8	10003742	
15	20	48	8	10003743	
15	30	58	8	10003744	
16	20	48	6	10003659	
16	20	48	8	10003745	
16	30	58	8	10017418	
18	20	48	8	10003746	
18	30	58	8	10003747	
20	20	48	8	10003748	

43010 HW grooving cutter Z2

Long design, shank 8 mm

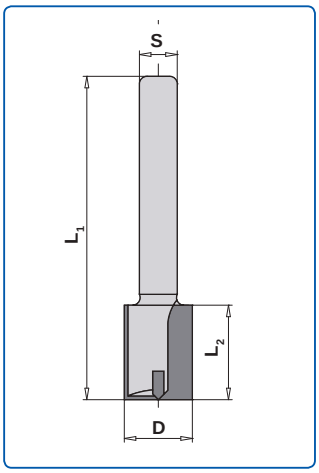

Application:	Grooving, jointing, rebating
Design:	HW boring tip rh rotation
Machine:	Router, stationary machines with and without tool changer
Feed:	MAN / MEC

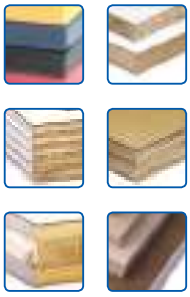

D mm	L2 mm	L1 mm	Shank mm	Order No.	Price [PG 02]
2	6	55	8	40013381	
3	8	55	8	10003816	
4	10	55	8	10003817	
5	12	55	8	10003818	
6	14	55	8	10003819	
6	25	60	8	10110794	
7	15	55	8	10003820	
8	20	55	8	10003821	
8	30	90	8	10003822	
9	20	55	8	10003823	
10	20	60	8	10003824	
10	30	90	8	10003825	
11	20	60	8	10003826	
12	30	90	8	10003828	
13	20	60	8	10003829	
14	20	60	8	10003830	
14	30	90	8	10003831	
15	20	70	8	10003832	
16	20	70	8	10003833	
16	30	90	8	10003834	
17	20	70	8	40015815	
18	20	70	8	10003835	
19	20	70	8	10003836	
20	20	70	8	10003837	
22	16	70	8	10003838	
24	16	70	8	10003839	
25	16	70	8	10003840	
30	16	70	8	10003843	

43010 HW grooving cutter Z2
Shank 10 x 35 mm

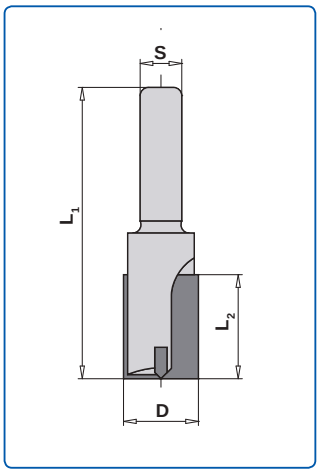

Application:	Grooving, jointing, rebating
Design:	HW boring tip rh rotation
Machine:	Router, stationary machines with and without tool changer
Feed:	MAN / MEC

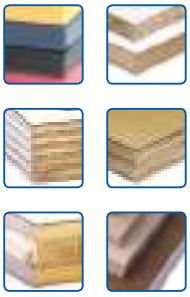

Standard length

D mm	L2 mm	L1 mm	Shank mm	Order No.	Price [PG 02]
4	10	49	10x35	10003766	
5	12	49	10x35	10003767	
6	14	53	10x35	10003768	
7	15	55	10x35	10003769	
8	20	60	10x35	10003770	
9	20	60	10x35	10003771	
10	23	70	10x35	10003772	

Excess length

D mm	L2 mm	L1 mm	Shank mm	Order No.	Price [PG 02]
10	40	97	10x35	10003773	
12	40	97	10x35	10003775	
14	40	97	10x35	10003777	
20	45	97	10x35	10003784	

43010 HW grooving cutter Z2
Shank 12 mm

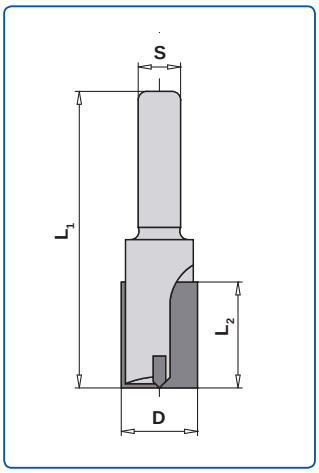

Application:	For grooving, jointing, rebating
Design:	HW boring tip rh rotation
Machine:	Router, stationary machines with and without tool changer
Feed:	MAN / MEC

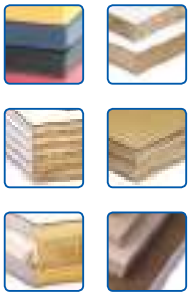

D mm	L2 mm	L1 mm	Shank mm	Order No.	Price [PG 02]
10	22	60	12x30	10004771	
10	35	90	12x50	10003850	
12	26	72	12x40	10002198	
12	35	90	12x50	10003851	
12	45	90	12x40	10003852	
14	30	80	12x40	10002200	
14	35	90	12x50	10003853	
14	50	100	12x40	10002222	
15	35	90	12x50	10003854	
16	35	90	12x50	10003855	
16	60	100	12x40	10003856	
18	35	90	12x50	10003857	
18	45	90	12x40	10003858	
20	35	90	12x50	10003859	
20	38	88	12x40	10002206	
20	45	90	12x40	10003860	
22	35	90	12x50	10003861	
22	40	92	12x40	10002207	
24	35	90	12x50	10003862	
25	40	92	12x40	10002209	
30	35	90	12x50	10003863	
30	42	94	12x40	10002211	

43010 HW grooving cutter Z2
with internal screw thread M10 IG

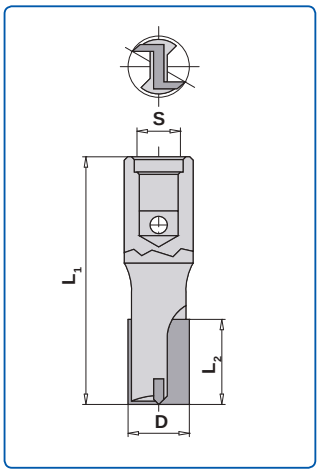

Application:	For grooving, jointing, rebating
Design:	HW boring tip rh rotation
Machine:	Router
Feed:	MAN

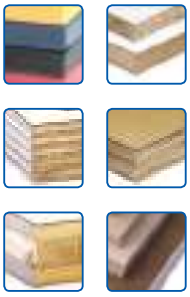

Standard length

D mm	L2 mm	L1 mm	Shank mm	Order No.	Price [PG 02]
3	8	47	M10	10004961	
4	10	49	M10	10004962	
5	12	50	M10	10004963	
6	14	55	M10	10004964	
8	20	55	M10	10004966	
10	23	55	M10	10004969	
12	23	55	M10	10004972	
16	25	55	M10	10004977	
18	25	55	M10	10004979	
20	25	55	M10	10004981	
25	25	55	M10	10004987	

Excess length

D mm	L2 mm	L1 mm	Shank mm	Order No.	Price [PG 02]
8	35	67	M10	10004967	
10	35	65	M10	10004970	
12	35	67	M10	10004973	
14	35	67	M10	10004975	
16	45	75	M10	10004978	
18	45	75	M10	10004980	
20	45	75	M10	10004982	
22	45	75	M10	10004984	
24	45	75	M10	10004986	

33010 I HW disc-type grooving cutter

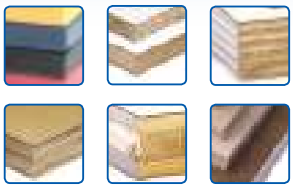

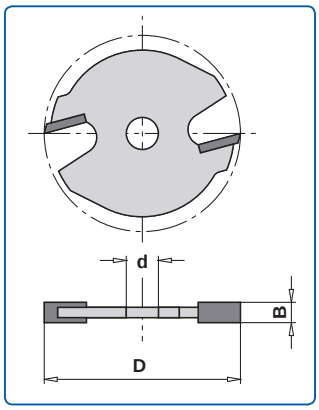

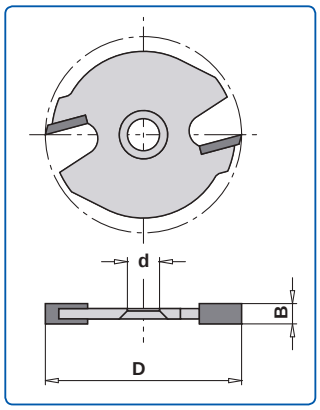

With countersunk bore

Application:	For grooving, applied on spindle
Design:	HW tips, periphery and side cutting, with deflector
Machine:	Router, stationary machines with and without tool changer
Feed:	MAN / MEC

B mm	D mm	d mm	Order No.	Price [PG 02]
1,5	40	6	10003506	
1,5	40	8	10003533	
1,6	40	8	10003534	
1,8	40	6	10003508	
2,0	40	6	10003509	
2,0	40	8	10003536	
2,2	40	6	10003510	
2,2	40	8	10003538	
2,5	40	6	10003511	
2,5	40	8	10003539	
2,8	40	6	10003512	
2,8	40	8	10003541	
3,0	40	6	10003513	
3,0	40	8	10003542	
3,5	40	6	10003514	
3,5	40	8	10003544	
4,0	40	6	10003515	
4,0	40	8	10003546	
5,0	40	6	10003516	
5,0	40	8	10003548	
6,0	40	6	10003517	
6,0	40	8	10003550	
2,5	50	6	10003518	
2,5	50	8	10003551	

With countersunk bore

B mm	D mm	d mm	Order No.	Price [PG 02]
2,0	40	8	10003537	
2,5	40	8	10003540	
2,8	40	8	40013378	
3,0	40	8	10003543	
3,5	40	8	10003545	
4,0	40	8	10003547	
5,0	40	8	10003549	

81000 Adaptor
Replaceable shank design with ball bearing guide

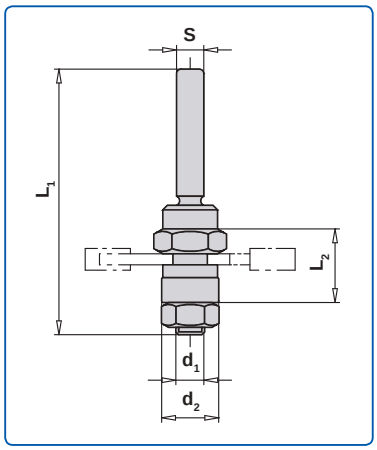

Application:	Holding fixture for grooving saw blades
Design:	Replaceable shank With ball bearing guide
Machine:	Router, stationary machines with and without tool changer
Feed:	MAN

d1 mm	d2 mm	L2 mm	L1 mm	Shank mm	Order No.	Price [PG 02]
6	16	12	57,5	6	10003566	
6	16	12	62,5	8	10003572	
8	16	12	59,5	6	10003568	
8	16	12	64,5	8	10003574	
8	16	12	64,5	12	10003580	

81000 Adaptor
Replaceable shank design without ball bearing guide

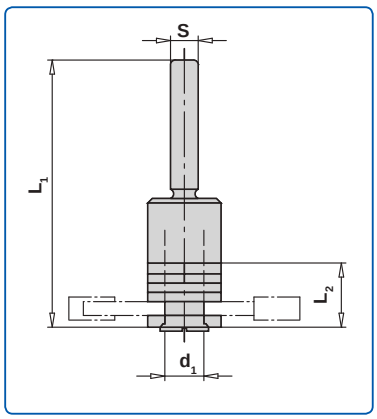

Application:	Holding Fixture for grooving saw blades with countersunk bore
Design:	Replaceable shank design Delivery without ball bearing ring
Machine:	Router, stationary machines with and without tool changer
Feed:	MAN

d1 mm	L2 mm	L1 mm	Shank mm	Order No.	Price [PG 02]
8	15	50	6	10003592	
8	15	55	8	10003598	

43010 I HW V-groove and engraving Z2

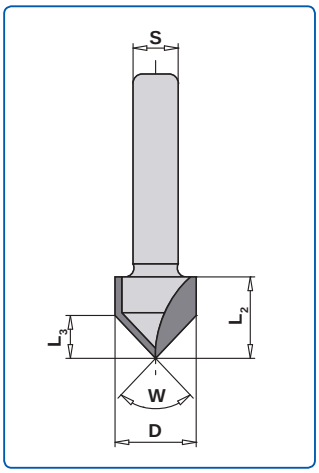

Application:	For V-grooves, decorative grooves
Design:	HW-tipped rh rotation
Machine:	Router, stationary machines with and without tool changer
Feed:	MAN / MEC

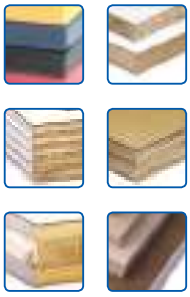

D mm	L2 mm	L3 mm	Shank mm	Angle	Order No.	Price [PG 02]
14	13,5	7	6	90°	10003873	
14	13,5	7	8	90°	10003882	

43010 HW V-groove and engraving cutter Z1
Replaceable shank design

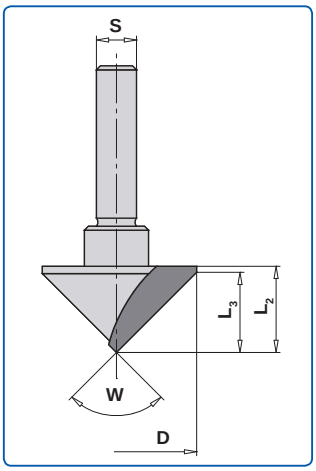

Application:	For V-grooves, decorative grooves, suitable for folding
Design:	HW-tipped rh rotation
Machine:	Router, stationary machines with and without tool changer
Feed:	MAN / MEC

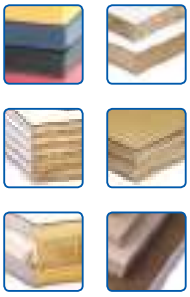

D mm	L2 mm	L3 mm	Shank mm	Angle	Order No.	Price [PG 02]
40	21,5	20	8	90°	10003883	
40	21,5	20	10	90°	10003884	
40	21,5	20	12	90°	10003885	

43010 HW V-groove and engraving cutter Z3
Replaceable shank design

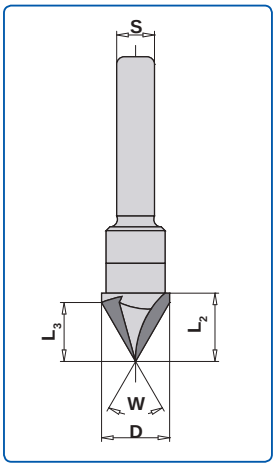

Application:	For V-grooves, decorative grooves
Design:	HW-tipped rh rotation
Machine:	Router, stationary machines with and without tool changer
Feed:	MAN / MEC

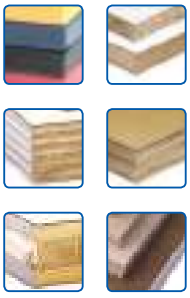

D mm	L2 mm	L3 mm	Shank mm	Angle	Order No.	Price [PG 02]
14	12,5	7	8	90°	10004160	
14	12,5	7	12	90°	10004162	
14	16,5	12	8	60°	10004159	
14	16,5	12	12	60°	10004161	

43010 I TOK bevel / folding cutter Z1

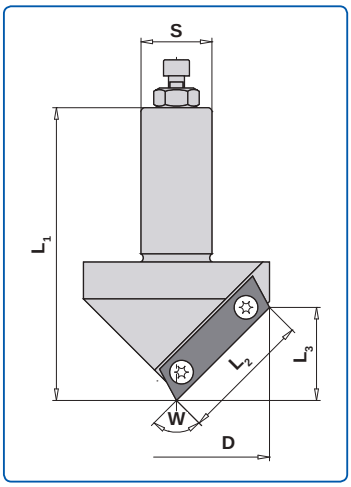

Application:	For V-grooves, decorative grooving, suitable for folding
Design:	HW TOK rh rotation HW01 = for MDF HW02 = for solid wood and wood-based material
Machine:	Stationary machines with and without tool changer
Feed:	MEC

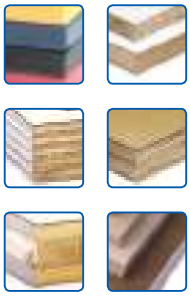

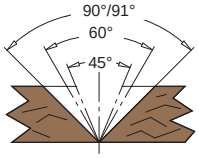

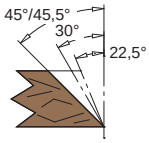

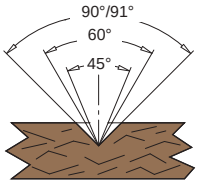

D mm	L2 mm	L1 mm	L3 mm	Shank mm	Angle	Order No.	Price [PG 02]
43	46,4	115	43	25x55	45°	10110998	
43	46,4	115	43	20x55	45°	10110997	
41,5	41,5	118	35	25x55	60°	10003024	
50	36,4	93	25	20x55	90°	40013307	
50	36,4	93	25	25x55	90°	40013308	
50	36,4	93	25	20x55	91°	10020657	
50	36,4	93	25	25x55	91°	10003025	

For folding cuts in chip boards use angle 91°, because of fibres possibly sticking out

Spare parts

Denomination	Dimension mm	Order No.	Price [PG 02]
TOK	60x12x1,5, HW02, for 45°	10113001	
TOK	50x12x1,5, HW02, for 60°	10006982	
TOK	50x12x1,5, HW01, for 60°	40015875	
TOK	40x12x1,5 HW02, for 90°+91°	10006981	
TOK	40x12x1,5 HW01, for 90°+91°	10006980	
Torx screw	M4x4 Big head, T15	10006040	

43010 I HW dovetail cutter

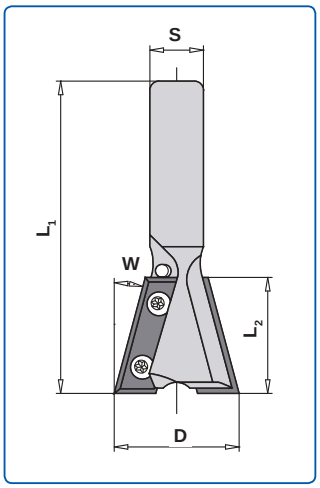

Application:	Dovetail joints
Design:	HW TOK rh rotation
Material:	Suitable for wood-based material and polymer plastic material (Corian)
Machine:	Router, stationary machines with and without tool changer
Feed:	MAN / MEC

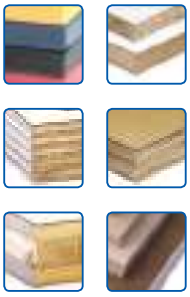

D mm	L2 mm	L1 mm	Shank mm	Angle	Order No.	Price [PG 02]
28	26	70	12x40	15°	40013368	

Spare parts

Denomination	Dimension mm	Order No.	Price [PG 02]
TOK	27x9x1,5 HW03	40013736	
Torx screw	M3,5x4,8 T15	10006053	

43070 I Solid HW grooving cutter Z2

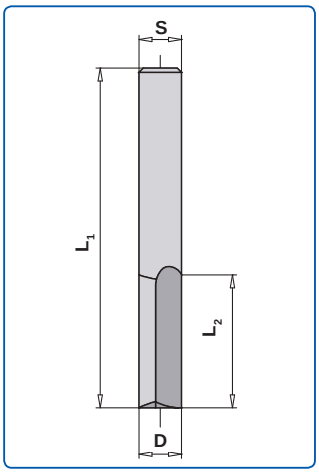

Application:	Grooving
Design:	Solid carbide tool body with boring tip, rh rotation, full-lenght cylindrical
Material:	Particularly suitable for plastic material and aluminium; suitable for wood-based material
Machine:	Stationary machines with and without tool changer, router
Feed:	MAN / MEC

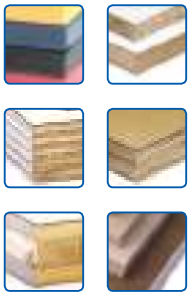

D mm	L2 mm	L1 mm	Shank mm	Order No.	Price [PG 02]
5	12	48	5	10002212	
6	14	50	6	10002213	
8	18	55	8	10002214	
10	20	58	10	10002215	
12	26	64	12	10002216	

43010 I TOK grooving cutter Z1

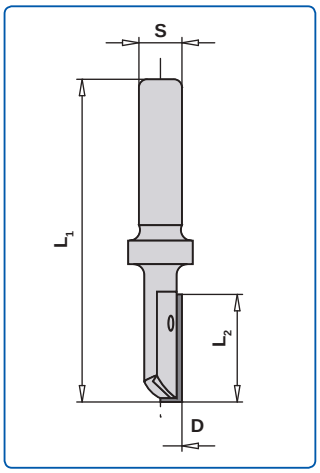

Application:	Grooving and jointing
Design:	Mini TOK with transverse groove to position the knives and secure against axial shifting of the knife; Ø 8 - 12.7 mm limited suitability for boring as well; rh rotation
Material:	Wood, wood-based material, panel material, plastic material
Machine:	Router, stationary machines with and without tool changer
Feed:	MAN / MEC

D mm	L2 mm	L1 mm	Shank mm	Order No.	Price [PG 02]
8	20	60	8x30	10003152	
8	20	70	10x40	10003159	
8	20	70	12x40	10003165	
9	20	70	10x40	10003160	
10	20	60	8x30	10003153	
10	25	75	10x40	10003161	
10	25	75	12x40	10003167	
12	20	60	8x30	10003154	
12	30	80	10x40	10003162	
12	30	80	12x40	10003170	
14	30	70	8x30	10003155	
14	30	80	12x40	10003172	
16	50	100	12x40	10003173	

Spare parts

Denomination	Dimension mm	Order No.	PG	Price
TOK	20x4,1x1,1, for D=8/9	10006964	01	
TOK	20x5,5x1,1, for D=10/12	10006965	01	
TOP TOK	25x5,5x1,1, for D=10/11	10006966	01	
TOP TOK	30x5,5x1,1, for D=12-14	10006967	01	
TOP TOK	50x5,5x1,1, for D=16	10006968	01	
Clamping wedges	D=8/9 x 20	10006192	02	
Clamping wedges	D=10 x 20	10006193	02	
Clamping wedges	D=10/11 x 25	10006194	02	
Clamping wedges	D=12 x 20	10006195	02	
Clamping wedges	D=12 x 30	10006196	02	
Clamping wedges	D=14 x 30	10006198	02	
Clamping wedges	D=16 x 50	10006199	02	
Torx screw	M2,5x3,0, T8, for D=8	10006055	02	
Torx screw	M2,5x4, T8, for D=9-11	10006056	02	
Torx screw	M3x7,0, T8, for D=12-14	10006057	02	
Torx screw	M3,5x5,5, T15, for D=16	10006058	02	

43010 TOK grooving cutter Z1+1
with reversible boring tip

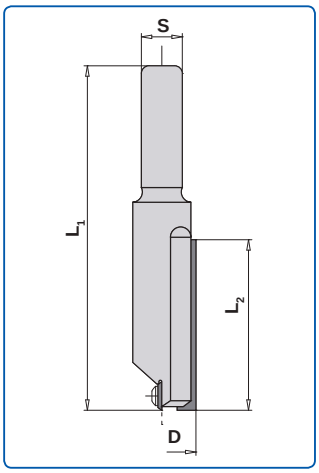

Application:	Grooving and jointing
Design:	Mini TOK with transverse groove to position the knives and secure against axial shifting of the knife; suitable for boring; rh rotation
Material:	Wood, wood-based material, panel material and plastic material
Machine:	Router, stationary machines with and without tool changer
Feed:	MAN / MEC

D mm	L2 mm	L1 mm	Shank mm	Order No.	Price [PG 02]
16	30	71	8x30	10003198	
16	30	81	12x40	10003207	
18	30	71	8x30	10003199	
18	30	81	12x40	10003209	
20	30	71	8x30	10003200	
20	30	81	12x40	10003211	
20	50	101	12x40	40013319	
22	30	71	8x30	10003201	
22	30	81	12x40	10003212	

Spare parts

Denomination	Dimension mm	Order No.	PG	Price
TOP TOK	30x5,5x1,1	10006967	01	
TOP TOK	50x5,5x1,1	10006968	01	
TOP TOK	12x12x1,5 Z4 BOS	10009450	02	
Clamping wedges	D=16 x 20	10111289	02	
Clamping wedges	D=16 x 30	10006201	02	
Clamping wedges	D=16 x 50	10006202	02	
Clamping wedges	D=18 x 30	10006204	02	
Clamping wedges	D=18 x 50	10006206	02	
Clamping wedges	D=20 x 30	10006208	02	
Clamping wedges	D=20 x 50	10006210	02	
Clamping wedges	D=16 x 20	10111290	02	
Clamping wedges	D=22 x 30	10006211	02	
Torx screw	M3,5x5,5, T15, for D=16/18	10006058	02	
Torx screw	M3,5x6,5, T15, for D=20/22	10006059	02	
Torx screw	M4x5,9, big head T15, for D=16/18; Bore bit	10006039	02	
Torx screw	M4x7, big head T15, for D=20/22; Bore bit	10032833	02	

43010 TOK sizing cutter Z2+2
with alternating axial angle, with HW boring tip

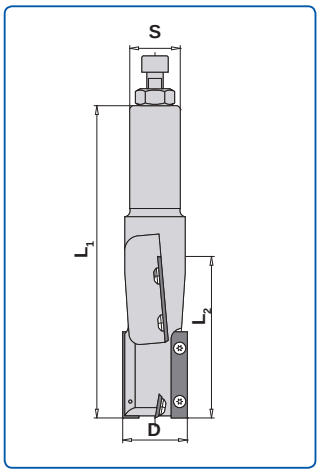

Application:	For high-quality finish on double-sided laminated wood-based panels
Design:	TOK HW-tipped boring tip
Machine:	Stationary machines with and without tool changer
Feed:	MEC

D mm	L2 mm	L1 mm	Shank mm	rhs/lhs	Order No.	Price [PG 02]
30	75	145	25x55	rhs	10002685	

Spare parts

Denomination	Dimension mm	Order No.	PG	Price
TOK	39,5x9x1,5 Z4	10025858	01	
TOP Reversible boring tip	7,5x12x1,5	10009449	01	
Torx screw	M3,5x4, T15, for strobes	10006052	02	
Torx screw	M4x5, T15, for boring tip	10006063	02	

43010 TOK shank cutter Z2
with HW boring tip

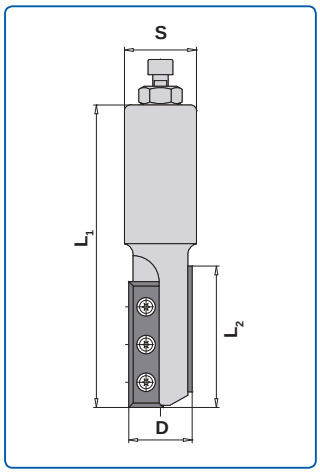

Application:	Grooving, jointing sizing
Design:	Staggered HW TOK screw-fixed on the back
Material:	Wood, wood-based material, panel material and plastic material
Machine:	Stationary machines with and without tool changer
Feed:	MEC

D mm	L2 mm	L1 mm	Shank mm	rhs/lhs	Order No.	Price [PG 02]
18	55	125	20x55	rhs	40013292	
18	55	125	20x55	lhs	40013291	
18	55	125	25x55	rhs	10002708	
18	55	125	25x55	lhs	10002707	
20	55	125	20x55	rhs	40013293	
20	55	125	25x55	rhs	10002711	
20	55	125	25x55	lhs	10025187	
22	55	125	25x55	rhs	10002713	

Spare parts

Denomination	Dimension mm	Order No.	PG	Price
TOP TOK	30x12x1,5 Z4	10009523	01	
TOP TOK	50x12x1,7 Z4, 3-hole-design	10009526	01	
Torx screw	M4x5,9, extra-large head T15, for D=16/18	10006039	02	

43010 TOK shank cutter
with HW boring tip

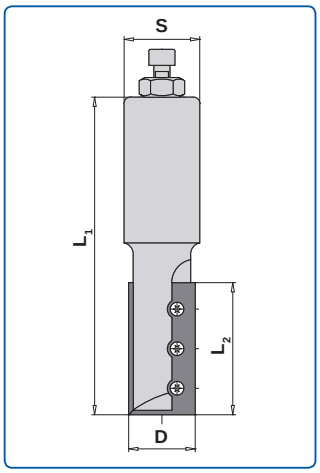

Application:	Grooving, jointing, sizing
Design:	HW-TOK, 50 mm, 3-hole-design, tips front-fixed Rh rotation
Material:	Wood, wood-based material, panel material and plastic material
Machine:	Router, stationary machines with and without tool changer
Feed:	MEC

D mm	L2 mm	L1 mm	Shank mm	Order No.	Price [PG 02]
25	50	119	25x55	40015768	

Spare parts

Denomination	Dimension mm	Order No.	PG	Price
TOP TOK	50x12x1,7 Z4, 3-hole-design	10009526	01	
Torx screw	M4x6, T15, for D=24/25	10006064	01	
Torx screw	M4x5,9, extra-large head T15, for D=30	10006039	02	

43010 TOK lockset cutter Z2
with HW boring tip

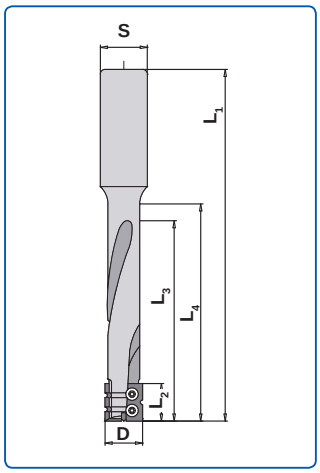

Application:	Lockset cutting
Design:	HW TOK with chip breaking grooves Tool body made of high-strength support material (heavy metal) Rh rotation
Material:	Solid wood, wood and wood-based panel material
Machine:	Stationary machines with and without tool changer and through-feed machines with lockset function
Feed:	MEC

D mm	L2 mm	L1 mm	Shank mm	L3 mm	L4 mm	Order No.	Price [PG 02]
16	16	170	16x55	105	113	10024418	
16	16	150	16x45	105	105	10031379	
16	16	170	20x55	105	110	10024624	
16	16	180	16x55	105	123	40013312	
16	16	210	25x75	105	134	40013313	
18	16	170	20x55	105	110	10025641	

Solid HW lockset cutter see page 217-218

Spare parts

Denomination	Dimension mm	Order No.	PG	Price
TOK	16x7x1,5 (1 groove)	10102639	01	
TOK	16x7x1,5 (2 grooves)	10102640	01	
Torx screw	M3x4, T9	10006060	02	
Handle key	T9	10006045	02	

Please note: Weldon clamping surfaces can be applied on request
Please advise the machine type or aggregate type

45010 HW rounding cutter
with exchangeable ball bearing

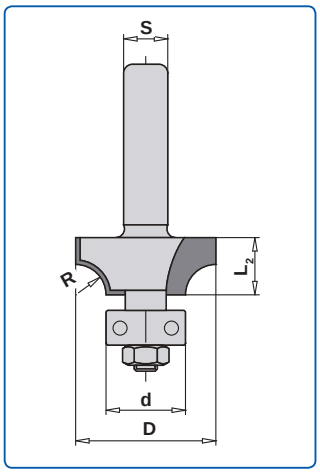

Application:	Cutting radii
Design:	HW-tipped exchangeable ball bearing guide on the front side
Material:	Wood and wood-based panel material
Machine:	Router
Feed:	MAN

D mm	L2 mm	R mm	d mm	Shank mm	Order No.	Price [PG 02]
18,7	8,0	3,0	12,7	6	10004017	
18,7	8,0	3,0	12,7	8	10004045	
20,7	9,0	4,0	12,7	6	10004018	
20,7	9,0	4,0	12,7	8	10004046	
22,7	10,0	5,0	12,7	6	10004019	
22,7	10,0	5,0	12,7	8	10004047	
25,4	11,3	6,35	12,7	8	10004048	
28,7	14,0	8,0	12,7	8	10004049	
31,7	15,5	9,5	12,7	8	10004050	
38,1	18,7	12,7	12,7	8	10004051	
53,0	27,0	20,0	12,0	12	10004052	
63,0	32,0	25,0	12,0	12	10004053	

Spare parts

Denomination	Dimension mm	Order No.	Price [PG 02]
Ring set	D=12, complete	10006026	
Ball bearing	D=12,7, d=4,76	10005990	
Ball bearing	D=15,9, d=6,35	10005992	
Hex. nut	M4, for d=12,7/15,9	40013542	

45010 HW rounding cutter
with ball bearing and replaceable shaft

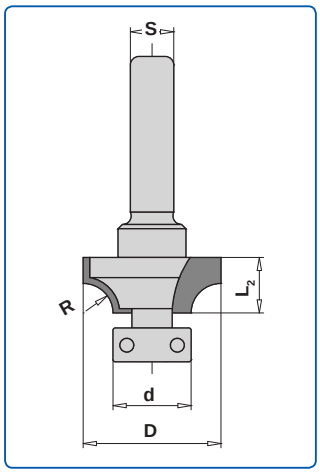

Application:	Cutting radii
Design:	HW-tipped Replaceable shaft and exchangeable ball bearing on the front side
Material:	Wood and wood-based panel material
Machine:	Router
Feed:	MAN

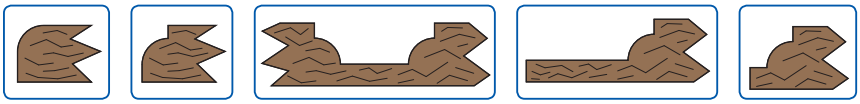

D mm	L2 mm	R mm	d mm	Shank mm	Order No.	Price [PG 02]
16,0	7	2,0	12	6	10004478	
16,0	7	2,0	12	8	10004502	
18,0	8	3,0	12	6	10004479	
18,0	8	3,0	12	8	10004503	
20,0	9	4,0	12	6	10004480	
20,0	9	4,0	12	8	10004504	
22,0	10	5,0	12	6	10004481	
22,0	10	5,0	12	8	10004505	
24,6	11	6,35	12	6	10004482	
24,6	11	6,35	12	8	10004506	
30,0	14	8,0	14	6	10004483	
30,0	14	8,0	14	8	10004507	
33,0	15	9,5	14	6	10004484	
33,0	15	9,5	14	8	10004508	
39,4	18	12,7	14	6	10004485	
39,4	18	12,7	14	8	10004509	
44,0	21	15,0	14	8	10004510	

Spare parts

Denomination	Dimension mm	Order No.	Price [PG 02]
Ring set	D=9, complete	10006025	
Ring set	D=12, complete	10006026	
Ring set	D=14, complete	10006027	
Cover pin	M3,5x6,0	10006006	

45010 I HW-tipped cove cutter

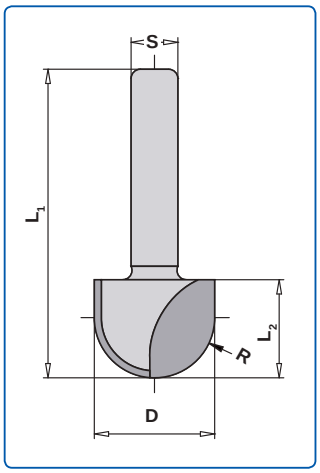

Application:	Cutting coves
Design:	HW-tipped
Material:	Wood and wood-based panel material
Machine:	Router, stationary machines with and without tool changer
Feed:	MAN / MEC

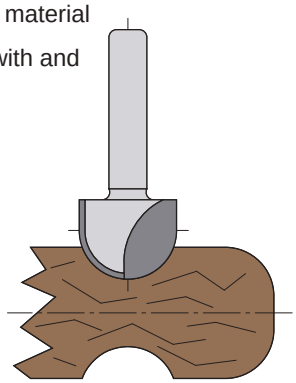

D mm	L2 mm	L1 mm	R mm	Shank mm	Order No.	Price [PG 02]
8,0	5,5	36	4,0	6	10003939	
8,0	5,5	60	4,0	8	10003967	
9,5	6,3	60	4,75	8	10003968	
11,0	8,0	60	5,5	8	10003969	
12,7	9,5	40	6,35	6	10003942	
12,7	9,5	60	6,35	8	10003970	
30,0	20,0	60	15,0	12	10003971	
40,0	25,0	65	20,0	12	10003972	

45010 TOK rounding cutter
with ball bearing guide and replaceable shaft

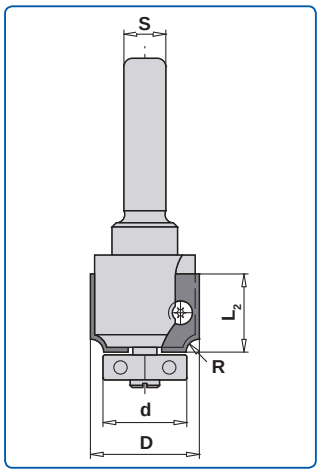

Application:	Cutting radii
Design:	TOK With replaceable shaft and exchangeable ball bearing guide on the front side
Material:	Wood and wood-based panel material
Machine:	Router
Feed:	MAN

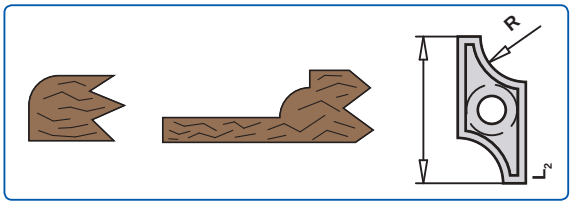

D mm	L2 mm	R mm	d mm	Shank mm	Order No.	Price [PG 02]
26	19,5	2	22	8	10002918	
26	19,5	3	20/18	8	10002919	
26	19,5	4	18/14	8	10002920	
26	19,5	5	16/12	8	10002921	
32	26	6	20/16	8	10002926	
32	26	8	16/12	8	10002927	
36	30	10	16/12	8	10002930	

Spare parts

Denomination	Dimension mm	Order No.	Price [PG 02]
Ovolo knife	19,4x9x1,5, R=2	10007047	
Ovolo knife	19,4x9x1,5, R=3	10007048	
Ovolo knife	19,4x9x1,5, R=4	10007049	
Ovolo knife	19,4x9x1,5, R=5	10007050	
Ovolo knife	26x12,5x1,5, R=6	10007051	
Ovolo knife	26x12,5x1,5, R=8	10007052	
Ovolo knife	30x14,5x1,5, R=10	10007053	
Ring set	D=12, complete	10006026	
Ring set	D=14, complete	10006027	
Ring set	D=16, complete	10006028	
Ring set	D=18, complete	10006029	
Ring set	D=20, complete	10006030	
Ring set	D=22, complete	10006031	
Torx screw	M4x6, T15, for D=26	10006064	
Torx screw	M4x5,9, extra-large head T15	10006039	
Cover pin	M3,5	10006006	

45010 I TOK rounding and bevel cutter

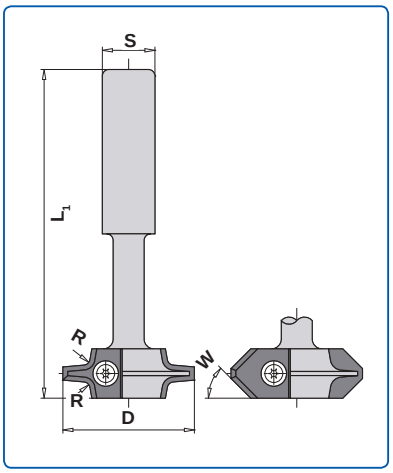

Application:	Rounding or bevelling
Design:	HW TOK In the same tool body rounding knives of different radii or 45° bevelling tips can be applied Rh rotation
Material:	Wood and wood-based panel material
Machine:	Stationary machines with and without tool changer
Feed:	MEC

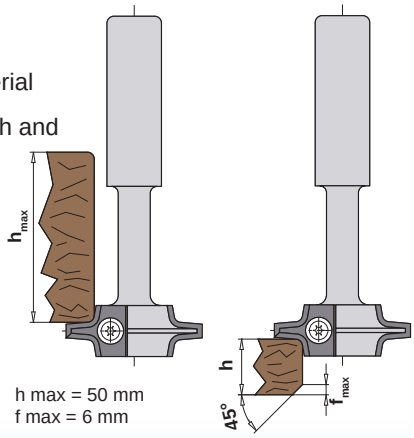

h max = 50 mm
f max = 6 mm

D mm	L1 mm	R mm	Angle	Shank mm	Order No.	Price [PG 02]
40	100	2		16	10003017	
40	100	3		16	10003018	
40	100	4		16	10003019	
40	100	5		16	10003021	
40	100		45°	16	10003020	

Spare parts

Denomination	Dimension mm	Order No.	Price [PG 02]
Tool body	without knife	10003016	
Rounding knife	15x18x2, R2	10007421	
Rounding knife	15x18x2, R3	10014922	
Rounding knife	15x18x2, R4	10007422	
Rounding knife	15x18x2, R5	40011755	
Rounding knife	15x18x2, 45°	10018580	
Torx screw	M4x5, T15	10006063	

45010 I TOK rounding and bevel cutter

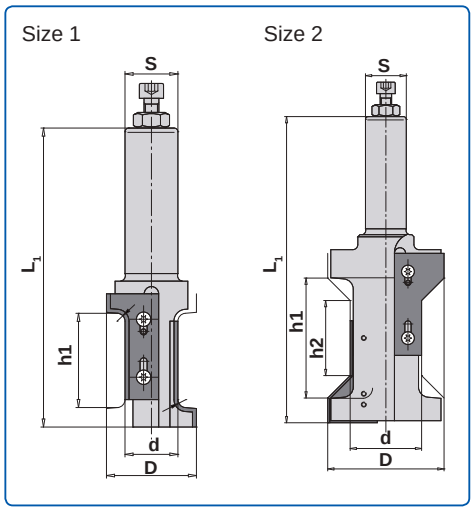

Application:	Rounding or bevelling on both sides
Design:	Tool body with two exchangeable HW knives, moveable towards each other, optionally for rounding or bevelling applications, on the same tool body, size 1 or size 2, either rounding knives or 45° bevelling knives can be used alternatively
Material:	Wood and wood-based panel material
Machine:	Stationary machines with and without tool changer
Feed:	MEC

D mm	L1 mm	Shank mm	d mm	Rhs/Lhs	Size	Order No.	Price [PG 02]
34	113	20x55	20	rhs	1	10003260	
34	113	25x55	20	rhs	1	10021751	
57	150	25x55	35	rhs	2	40013331	

Size 1: h1 = bevelling max. 42 mm; h2 = rounding max. 19-34 mm
Size 2: h1 = bevelling max. 56 mm; h2 = rounding max. 22-43 mm

HW TOK

Dimension mm	R	Angle		for size	Order No.	Price [PG 02]
Rounding knife - h1 = 19 - 34 mm						
40x17,2x2,2	3		top	1	10007513	
40x17,2x2,2	3		bottom	1	10007514	
40x18,2x2,2	4		top	1	10007515	
40x18,2x2,2	4		bottom	1	10007516	
40x19,2x2,2	5		top	1	10007517	
40x19,2x2,2	5		bottom	1	10007518	
40x20,2x2,2	6		top	1	10007519	
40x20,2x2,2	6		bottom	1	10007520	
Bevelling knife - h2 = 13 - 29 mm						
40x20,2x2,2		45°	top	1	10007521	
40x20,2x2,2		45°	bottom	1	10007522	
Rounding knife - h1 = 35 - 56 mm						
50x20,3x2,2	6		top	2	10007526	
50x20,3x2,2	6		bottom	2	10007527	
50x22,3x2,2	8		top	2	10007528	
50x22,3x2,2	8		bottom	2	10007529	
50x24,3x2,2	10		top	2	10007530	
50x24,3x2,2	10		bottom	2	10007531	
Bevelling knife - h2 = 22 - 43 mm						
50x24,3x2,2		45°	top	2	10007532	
50x24,3x2,2		45°	bottom	2	10007533	

45010 I Cutter head for HW profile TOK

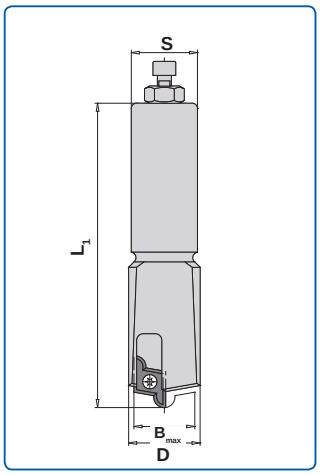

Application:	Cutting profiled grooves, rosettes, etc.
Design:	Designed to take one HW TOK, profiled on both sides, with axial angle. Can be reground several times (depending on profile depth)
Material:	Wood and wood-based panel material
Machine:	Stationary machines with and without tool changer
Feed:	MEC

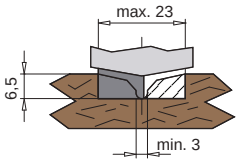

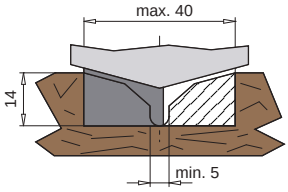

profilable area

D mm	B max mm	L1 mm	Shank mm	Rhs/Lhs	Size	Order No.	Price [PG 02]
27	23	69	12x40	rhs	1	10003231	

Profile width and depth as per the following figure

HW TOK

	Dimension mm	Design	for size	Order No.	PG	Price
TOP	20x12x1,5	unprofiled	1	10009457	01	

Spare parts

Denomination	Dimension mm	Order No.	Price [PG 02]
Torx screw	M4x6, T15, for Gr. 1	10006064	
Handle key	T15	10006050	
Flag-type-key	T15	10006049	

45010 I TOK profile cutter for bottom cutting Z2

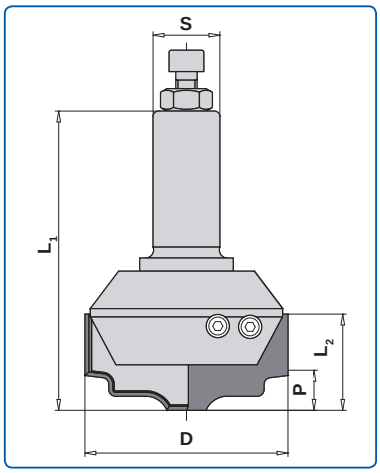

Application:	Cutting profiled grooves, rosettes, etc.
Design:	Tool body for single-profiled HW TOK with support plate Rh rotation
Material:	Wood and wood-based panel material
Machine:	Stationary machines with and without tool changer
Feed:	MEC

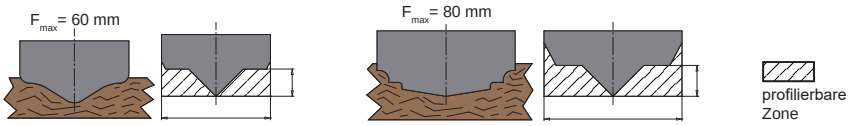

D mm	L2 mm	L1 mm	Shank mm	Rhs/Lhs	P	Order No.	Price [PG 02]
60	34	105	20x55	rhs	15	40002572	
76	35	112	25x55	rhs	17	10003246	

For D = 60 mm tipping consists of:
two identical knives and support plates each

For D = 76 mm tipping consists of:
- 1 pc each of TOK type A and B,
- 2 pcs support plates

HW TOK and support plates

Dimension mm	for D=mm	Design	Type	Order No.	Price [PG 02]
HW TOK					
30x35x2	60	unprofiled		10017307	
40x36x2	76	unprofiled	A	10007465	
40x36x2	76	unprofiled	B	10007466	
Support plates 4,2 mm thickness					
30x35x2		unprofiled		10017288	
40x36x2		unprofiled		10007487	

Spare parts

Denomination	Dimension mm	Order No.	Price [PG 02]
Clamping wedges	28, rhs	40013574	
Clamping wedges	35, rhs	10006184	
Ball pressure screw	M8x12, for D=76	10006035	
Ball pressure screw	M6x10, for D=60	40013521	
Sliding bar key	SW 4	10006096	

45010 TOK profile cutter
without axial angle

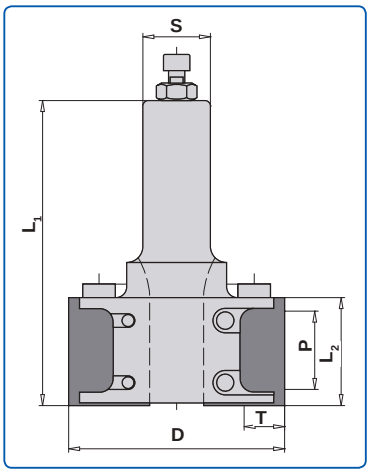

Application:	For profiling
Design:	Steel tool body designed to hold special HW profile knives with support plate, profile design according to customer requirements. Interlocking knife clamping
Material:	Wood and wood-based panel material
Machine:	Stationary machines with and without tool changer
Feed:	MEC

D mm	L2 mm	L1 mm	Shank mm	Z	P	T	Rhs/Lhs	Order No.	Price [PG 02]
80	40	113	25	2	29	15	rhs	10016300	
80	40	113	25	2	29	15	lhs	10020007	
100	40	100	25	2	29	19	rhs	10015043	
100	40	100	25	2	29	19	lhs	10016470	
110	60	120	25	2	51	24	rhs	10015044	
110	60	120	25	2	51	24	lhs	10015303	

Knives and support plates are profiled according to customer requirements
A profile drawing or material sample is necessary

Spare parts for 10016300, 10020007

Denomination	Dimension mm	Order No.	Price [PG 02]
Blank	40x30x2,0 Z1	10015786	
Clamping wedges	38	10016489	
Threaded pin	M8x12	40002007	
Support plate		10023991	
Stop ring	69,5	10020020	

Spare parts for 10015043, 10016470

Denomination	Dimension mm	Order No.	Price [PG 02]
Blank	40x35x2,0 Z1	33009263	
Clamping wedges	38	10016489	
Threaded pin	M6x16	40001998	
Support plate		10019297	
Stop ring	56	10017984	

Spare parts for 10015044, 10015303

Denomination	Dimension mm	Order No.	Price [PG 02]
Blank	60x40x2,0 Z1	10014340	
Clamping wedges	58	10016488	
Threaded pin	M8x12	40003228	
Support plate		10023992	
Stop ring	56	10017984	

45010 I TOK planing cutter Z3

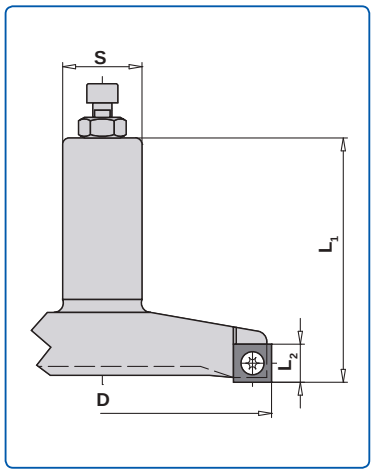

Application:	Cutting work tops on CNC machines, cutting wide edge bands flush, suitable for large rebating depths with low height
Design:	Tool body with 3 HW TOK working from the outside to the centre with 4 cutting edges Rh rotation
Material:	Wood-based panels with or without coating
Machine:	Stationary machines with and without tool changer
Feed:	MEC

D mm	L2 mm	L1 mm	Shank mm	Z	Order No.	Price [PG 02]
80	14	85	25x55	3	40015806	

Spare parts

Denomination	Dimension mm	Order No.	PG	Price
TOK	14x14x2,0 Z4	10009453	01	
Torx countersunk screw	M5x6,0 T 15	10106762	02	

43010 I TOK planing cutter Z5

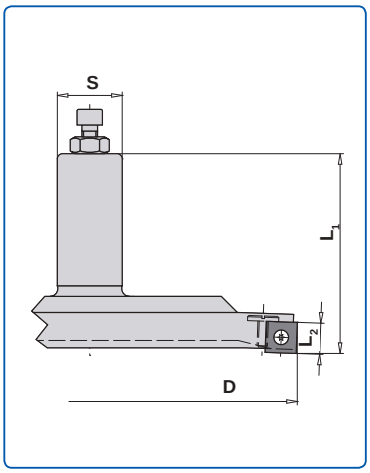

Application:	Cutting work tops on CNC machine
Design:	Steel cutter head with HW TOK 12 x12 x 1,5; 4-fold usable
Material:	Wood-based panels with and without coating
Machine:	Stationary machines with and without tool changer
Feed:	MEC

D mm	L2 mm	L1 mm	Shank mm	Z	n (max) rpm	Order No.	Price [PG 02]
160	12	80	25	5	7.000	10110290	

Spare parts

Denomination	Dimension mm	Order No.	Price [PG 02]
TOP HW TOK	12x12x1,5 Z4	10009450	
Torx countersunk screw	M3x6,0 extra-large head	10123471	

43030 HS water slot cutter
Spiral design

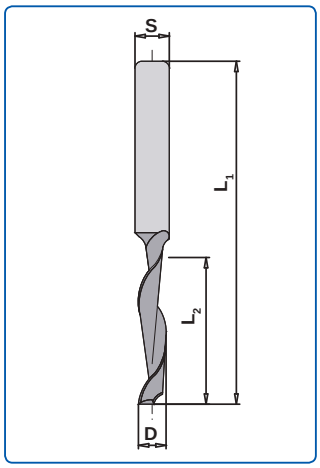

Application:	Used on copy routers or water slot cutting machines
Design:	Spiral design, single-edged and double-edged. Rh rotation
Feed:	MEC

D mm	L2 mm	L1 mm	Shank mm	Z	Order No.	Price [PG 02]
5	35	80	8	1	10004888	
5	40	100	8	1	10004889	

Notes

Cutter with bore

Content

Cutter with bore

Products	Page
Planing cutter head	268-272
Bevel cutter	273-274
Rebate cutter	275
Grooving cutter	276-284
Radius cutter	285
Profile cutter	286-292
Panel raising cutter	293
Glue joint cutter	294
Edge trimming cutter	295

33030 Planing cutter head

Planing cutter head with clamping wedge

Application:	For pre and finish planing
Material:	Hard and soft wood
Machine:	Four-sided profile cutting and planing machine
Design:	Steel cutter head Re-sharpenable HS planer knives 30x3 mm HW planer knives can be ordered separately
Tooth:	HS
Feed:	MEC

Steel tool body

D mm	B mm	d mm	d (max) mm	Z	Order No.	Price [PG 02]
125	80	30	40	4	10156831	
125	100	30	40	4	10156835	
125	130	30	40	4	10156836	
125	150	30	40	4	10156840	
125	180	30	40	4	10156837	
125	220	30	40	4	10156838	
125	230	30	40	4	10156839	

Further dimensions on request
Available with HW planer knives at a premium

Spare parts

Denomination	Dimension mm	DT	Order No.	Price [PG 02]
Clamping wedge	80x21,7x12	◊	10157182	
Clamping wedge	100x21,7x12	◊	10157183	
Clamping wedge	130x21,7x12	◊	10157222	
Clamping wedge	150x21,7x12	◊	10157223	
Clamping wedge	180x21,7x12	◊	10157336	
Clamping wedge	220x21,7x12	◊	10157227	
Clamping wedge	230x21,7x12	◊	10157335	
Screw	M10x25	◊	10160236	
Key	SW5	◊	10160237	

33030 Planing cutter head

Hydraulic planing cutter head with clamping wedge

Application:	For super finish planing Recommended chip removal 0,5 - 0,8 mm
Material:	Hard and soft wood
Design:	Steel body, planer knife 30x3 mm
Tooth:	HS
Feed:	MEC

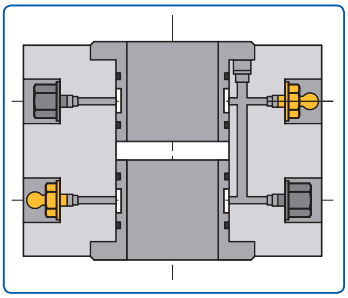

Steel tool body with HS knives

D mm	B mm	d mm	Z	n (max) min^{-1}	DT	Order No.	Price [PG 02]
143	150	40	6	9.000	◊	10156775	
163	100	50	6	8.000	◊	10156777	
163	150	50	6	8.000	◊	10156780	
163	150	50	8	8.000	◊	10156781	

Further dimensions on request
HS knives in the scope of delivery. Not mounted.

Spare parts

Denomination	Dimension mm	DT	Order No.	Price [PG 02]
Clamping wedge	100x21,7x12	◊	10157183	
Clamping wedge	150x21,7x12	◊	10157223	
Threaded pin	M12x20	◊	10157171	
Sliding bar key	SW6	◊	40005681	

33030 Planing cutter head
with centrifugal clamping

Application:	For pre and finish planing
Material:	Hard and soft wood
Design:	Steel body with TOK n (min) 6.000 rpm / n (max) 10.000 rpm
Tooth:	HS TOK system Centrolock
Feed:	MEC

D mm	B mm	d mm	Z	n (max) min^{-1}	DT	Order No.	Price [PG 02]
125	80	40	4	10.000	◊	10156560	
125	100	40	4	10.000	◊	10156599	
125	130	40	4	10.000	◊	10156606	
125	150	40	4	10.000	◊	10156608	
125	180	40	4	10.000	◊	10156609	
125	230	40	4	10.000	◊	10156613	

Can be re-sharpened once. For spare knives please see chapter Knives on page 335

Spare parts

Denomination	Dimension mm	DT	Order No.	Price [PG 02]
Clamping wedge	80x17,9x12	◊	10157242	
Clamping wedge	100x17,9x12	◊	10157243	
Clamping wedge	130x17,9x12	◊	10157244	
Clamping wedge	150x17,9x12	◊	10157245	
Clamping wedge	180x17,9x12	◊	10157246	
Clamping wedge	230x17,9x12	◊	10157247	
Threaded pin	M12x20	◊	10157171	
Sliding bar key	SW6	◊	40005681	

33030 Planing cutter head
Powerlock with centrifugal clamping

Application:	For pre and finish planing
Material:	Hard and soft wood
Machine:	Weinig Powermat
Design:	Steel body, with HSK 85 holder for Weinig Powerlock system
Tooth:	HS TOK system Centrolock
Feed:	MEC

D mm	B mm	d mm	Z	n (max) min^{-1}	DT	Order No. rhs	Order No. lhs	Price [PG 02]
93	60	HSK 85WE	2	12.000	◊	10157280	10157281	
93	80	HSK 85WE	2	12.000	◊	10157282	10157283	
93	100	HSK 85WE	2	12.000	◊	10157284	10157285	
93	130	HSK 85WE	2	12.000	◊	10157286	10157287	
93	150	HSK 85WE	2	12.000	◊	10157288	10157289	
93	170	HSK 85WE	2	12.000	◊	10157290	10157291	
93	190	HSK 85WE	2	12.000	◊	10156806	10156807	
93	210	HSK 85WE	2	12.000	◊	10157292	10157293	
93	240	HSK 85WE	2	12.000	◊	10157294	10157295	

Can be re-sharpened once. For spare knives please see chapter Knives on page 335

Spare parts

Denomination	Dimension mm	DT	Order No.	Price [PG 02]
Clamping wedge	60x17,9x12	◊	10157230	
Clamping wedge	80x17,9x12	◊	10157242	
Clamping wedge	100x17,9x12	◊	10157243	
Clamping wedge	130x17,9x12	◊	10157244	
Clamping wedge	150x17,9x12	◊	10157245	
Clamping wedge	170x17,9x12	◊	10157239	
Clamping wedge	190x17,9x12	◊	10157184	
Clamping wedge	210x17,9x12	◊	10157240	
Clamping wedge	240x17,9x12	◊	10157241	
Threaded pin	M12x20	◊	10157171	
Sliding bar key	SW6	◊	40005681	

33010 Planing cutter head

Spiral planing cutter head

Application:	For pre planing
Material:	Hard and soft wood
Machine:	Four-sided profile cutting and planing machine
Design:	Tool body made of light metal; knife with radius for tear-free cuts and smooth surface; Z 3 with 6 helices, therefore step-free overlaps
Tooth:	HW
Feed:	MEC

D mm	B mm	d mm	Z	n (max) min^{-1}	DT	Order No.	Price [PG 02]
125	100	40	3 (30)	10.000	◊	10156621	
125	130	40	3 (36)	10.000	◊	10156623	
125	180	40	3 (48)	10.000	◊	10156625	
125	230	40	3 (60)	10.000	◊	10156627	

Available with axial angle on request
Can be mounted on Powerlock holder - see page 375

Spare parts

	Denomination	Dimension mm	DT	Order No.	PG	Price
TOP	HW TOK	15x15x2,5 Z4 R115	◊	10149346	01	
	Torx countersunk screw form N	M5x13	◊	10110740	02	

33010 Bevel cutter
Swivel cutter head

Application:	Jointing, bevelling
Material:	Hard and soft wood, wood-based panel material
Machine:	Milling machine and sizing machine
Design:	Tool body made of aluminium or steel; infinitely swivelling (+/-90°); rebate cutting with additional disc possible
Tooth:	HW
Feed:	MAN

D mm	B mm	d mm	Z	d (max) mm	n (max) min^{-1}	Tool body	DT	Order No.	Price [PG 02]
160	50	30	2	up to 50	5.000 - 6.000	Steel	◊	10111453	
200	80	30	2	up to 50	4.500 - 5.800	Alu	◊	10105274	

Additional disc for rebate cutting available on request

Spare parts for 10111453 (B=50)

Denomination	Dimension mm	DT	Order No.	PG	Price
TOP HW TOK	50x12x1,5 Z2	◊	10009474	01	
Clamping wedge	48	◊	10110635	02	
Swivelling element	to B = 50	◊	10110639	02	

Spare parts for 10105274 (B=80)

Denomination	Dimension mm	DT	Order No.	PG	Price
TOP HW TOK	80x13x2,2 Z2	◊	10009478	01	
Clamping wedge	78	◊	10110637	02	
Swivelling element	to B = 80	◊	10112938	02	

33030 Bevel cutter

Bevel cutter 45°, HS and TOK

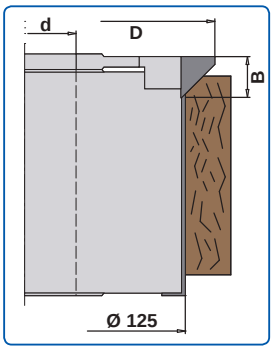

Application:	For chamfering combined with a planing cutter head
Material:	HS: Soft wood WP: Hard and soft wood
Design:	HS Tipped cutters Bevel cutter TOK: Cutter head, steel body Weinig Standard
Tooth:	HS HW TOK Z4
Feed:	MEC

HS bevel cutter

D mm	B mm	d mm	Z	n (max) min^{-1}	rhs/ lhs	Order No.	Price [PG 02]
148	16	40	2	depends on the planer head	rhs	10015215	
148	16	40	2	depends on the planer head	lhs	10015213	

Available in HW as well

WP bevel cutter

D mm	B mm	d mm	Z	n (max) min^{-1}	rhs/ lhs	Order No.	Price [PG 02]
145	15	40	4	depends on the planer head	rhs	10026459	
145	15	40	4	depends on the planer head	lhs	10031981	

Spare parts

Denomination	Dimension mm	Order No.	PG	Price
TOP HW TOK	15x15x2,5 Z4	40007373	01	
Countersunk screw DIN 7991 T	M5x6,1	40005305	02	

33010 TOK Rebate cutter

TOK Rebate cutter

Application:	Jointing and rebating
Material:	Hard and soft wood, wood-based panel material
Machine:	Milling machine and sizing machine
Design:	Cutter head, steel or aluminium body, without axial angle
Tooth:	HW TOK Z2 HW spurs Z4
Feed:	MAN

D mm	B mm	d mm	Z	DT	Tool body	Order No.	Price [PG 02]
125	30	30	2 / V4	◊	Alu	10156691	
125	50	30	2 / V4	◊	Steel	10156697	
125	50	30	4 / V4	◊	Steel	10156698	
125	60	30	2 / V4	◊	Steel	10010244	

HW TOK

	Allocation	Dimension mm	DT	Order No.	Price [PG 01]
TOP	for 10156691	30x12x1,5 Z2	◊	10009464	
TOP	for 10156697, 10156698	50x12x1,5 Z2	◊	10009474	
TOP	for 10010244	60x12x1,5 Z2	◊	10009476	
TOP	Spur	14x14x2 Z4	◊	10009453	

Clamping wedge

Allocation	Dimension mm	DT	Order No.	Price [PG 02]
for 10156691	28 mm	◊	10112114	
for 10156697, 10156698	48 mm	◊	10017268	
for 10010244	58 mm	◊	10017269	

Spare parts

Denomination	Dimension mm	DT	Order No.	PG	Price
Countersunk screw DIN 963	M5x8	◊	40001969	02	
Threaded pin	M6x16	◊	40001998	02	
Allen Key	SW3	◊	10006089	02	
Setting gauge	0,55 mm	◊	10019459	01	

33010 Grooving cutter

HW Lamello grooving cutter

Application:	Grooving for lamella plates
Material:	Hard and soft wood, wood-based panel material
Machine:	Power tools
Design:	Saw-design, tipped cutters
Tooth:	HW
Feed:	MAN

D mm	B mm	d mm	Z	NL	n (max) min^{-1}	Order No.	Price [PG 02]
100	3,97	22	6	4/4,5/36	7.600-13.300	10156629	

33010 Grooving cutter

TOK Lamello grooving cutter

Application:	Grooving for lamella plates
Material:	Wood and wood-based material with and without coating
Machine:	Power tools
Design:	TOK, steel body, top and side cutting
Tooth:	HW TOK Z4, HW spurs Z4
Feed:	MAN

D mm	B mm	d mm	Z	n (max) min^{-1}	DT	Order No.	Price [PG 02]
100	3,97	22	2 / V4	7.700 - 13.200	◊	10156726	

Spare parts

	Denomination	Dimension mm	DT	Order No.	PG	Price
TOP	HW TOK	18x18x1,95 Z4	◊	10009494	01	
TOP	HW spur	14x14x1,2 Z4	◊	10009452	01	
	Nut for strobes	1,95 M4x0,5 D=11,8	◊	10157164	02	
	Nut for spurs	1,20 M4x0,5 D=9,8	◊	10006105	02	
	Torx screw	M4x0,5x3,2		40006392	02	
	Sliding bar key	T 9	◊	40004177	02	
	Setting gauge		◊	10020189	02	

2351 Grooving cutter
2353 Lamello grooving cutter

Application:	For lamello grooves
Material:	Wood and panel material with and without coating
Machine:	Portable machines
Tooth:	Clustered teeth, HW
Feed:	MAN

With hub (spacer 55 / 22 x 0,5)

D mm	B mm	d mm	Z	Tooth shape	Order No.	Price [PG 01]
100	3,97	22	12	WF	2351.100.22	

Grooving cutter for Elu-Doublo DS140

without hub

D mm	B mm	d mm	Z	Tooth shape	Order No.	Price [PG 01]
100	3,97	22	12	WF	2353.100.22	

35010 Grooving cutter
Resin pocket cutter

Application:	For cutting resin pockets and removing damages
Material:	Solid wood
Machine:	Power tools
Design:	Tipped cutters
Tooth:	HW
Feed:	MAN

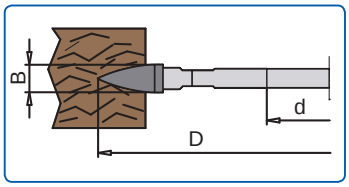

	D mm	B mm	d mm	Z	n (max) min^{-1}	DT	Order No.	Price [PG 02]
TOP	100	8	22	4	7.600 - 13.400	◊	10156729	

33010 Grooving cutter

TOK cutter for guiding rebate

Application:	To be combined with a planing cutter head
Material:	Hard and soft wood
Design:	Cutter head with TOK and spurs
Tooth:	HW
Feed:	MEC

D mm	B mm	d mm	Z	n (max) min^{-1}	DT	Order No.	Price [PG 02]
145	12	40	2 / V2	11.000	◊	10156620	

Spare parts

	Denomination	Dimension mm	DT	Order No.	PG	Price
TOP	HW TOK	12x12x1,5 Z4	◊	10009450	02	
	Clamping wedge	10,5	◊	10028146	02	
	Threaded pin DIN 915	M8x16	◊	40002009	02	
TOP	HW spur	14x14x2,0 Z4	◊	10009453	01	
	Countersunk screw DIN 7991	M5x6	◊	40001968	02	
	Sliding bar key	SW 4	◊	40004852	02	

33010 Grooving cutter
TOK adjustable grooving cutter

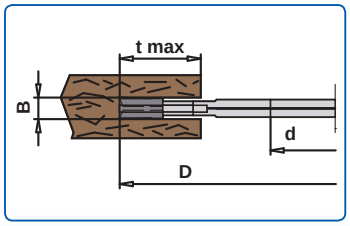

Application:	Cutting grooves on circular bench saws and milling machines
Material:	Hard and soft wood
Machine:	Bench-mounted milling machines
Design:	TOK design with scrapers and spurs on both sides Body made of light metal. Grooving depth t (max.) 100 mm
Tooth:	HW TOK Z2 HW SPURS Z4
Feed:	MAN

D mm	B mm	d mm	Z	d (max) mm	n (max) min^{-1}	DT	Order No.	Price [PG 02]
250	8-15	30	4 / V4	up to 50	3.000 - 5.000	◊	10157337	

Spare parts

Denomination	Dimension mm	DT	Order No.	PG	Price
TOP HW spurs	14x14x2	◊	10009453	01	
Clamping wedge	6,5 mm	◊	10157160	02	
Screw	M5x6	◊	10006092	02	
Clamping screw	M5x16	◊	40001987	02	
Screw	M5x9	◊	10006093	02	
Key	SW2,5	◊	10006088	02	
Sliding bar key	T9	◊	40004177	02	
Setting gauge	0,25 mm	◊	10157167	02	

For turn-over knives see chapter Knives on page 340

33010 | Grooving cutter
TOK grooving cutter

Application:	For grooving along and across the grain
Material:	Hard and soft wood, wood-based panel material
Machine:	Milling machine and sizing machine
Design:	B 4-6 mm: Steel body B 8-12 mm: aluminium body
Tooth:	HW TOK Z2 / Z4 HW spurs Z4
Feed:	MAN

D mm	B mm	d mm	Z	t (max) mm	DT	Order No. cutter	Preis [PG 02]	Order No. Clamping wedge	Preis [PG 02]
125	4	30	4+4	37	◊	10156888			
125	5	30	4+4	37	◊	10156889			
125	6	30	4+4	37	◊	10156890			
125	8	30	4+4	37	◊	10156891		10157160	
125	10	30	4+4	37	◊	10156892		10157162	
125	12	30	4+4	37	◊	10156893		10157163	
150	4	30	4+4	49	◊	10156895			
150	5	30	4+4	49	◊	10156896			
150	6	30	4+4	49	◊	10156897			
150	8	30	4+4	49	◊	10156898		10157160	
150	10	30	4+4	49	◊	10156899		10157162	
150	12	30	4+4	49	◊	10156900		10157163	

Spare knives / Spare parts

	Allocation	Dimension mm	DT	Order No.	PG	Price
TOP	Spurs for B = 4-6 mm	14x14x1,2	◊	10009452	01	
TOP	Spurs for B = 8-12 mm	14x14x2,0	◊	10009453	01	
TOP	TOK for B = 4 mm	18x18x1,95	◊	10009494	01	
	TOK for B = 5 mm	18x18x2,45	◊	10009495	01	
	TOK for B = 6 mm	18x18x2,95	◊	10009496	01	
TOP	TOK for B = 8 mm	7,5x12x1,5	◊	10009449	01	
	TOK for B = 10 mm	9,6x12x1,5	◊	10009480	01	
	TOK for B = 12 mm	11,6x12x1,5	◊	10009483	01	
	Torx nut	D=9,8	◊	10006105	02	
	Torx nut	D=11,8	◊	10157164	02	
	Countersunk screw DIN 963	M5x8	◊	40001969	02	
	Threaded pin	M6x16	◊	40001998	02	
	Allen key	SW3	◊	10006089	02	
	Setting gauge	0,55mm	◊	10019459	01	

33010 HW Adjustable grooving cutter
with spacers in 0,1 mm increments

Plane tool body

Stepped tool body

Application:	For grooving along and across the grain
Material:	Wood and panel material with and without coating
Machine:	Milling machine and sizing machine
Design:	HW-tipped with wipers, flat, spurs on top and bottom, top and side cutting
Tooth:	HW
Feed:	MAN

Plane tool body

D mm	B mm	d mm	Z	d (max) mm	n (max) min^{-1}	t (max) mm	Order No.	Price [PG 02]
120	1,8-3,4	30	6+6	30	6.000 - 12.000	12	10001957	
120	2,2-4	30	6+6	30	6.000 - 12.000	15	10001958	
140	2,2-4	30	6+6	30	6.000 - 12.000	15	10001960	

Stepped tool body

D mm	B mm	d mm	Z	d (max) mm	n (max) min^{-1}	t (max) mm	DT	Order No.	Price [PG 02]
140	2,5-4,8	30	4 / V4	up to 50	5.500 - 9.500	15	◊	10023859	
150	4-7,5	30	4 / V4	up to 50	5.100 - 9.000	35	◊	10009619	
150	7,5-14	30	4 / V4	up to 50	5.100 - 9.000	35	◊	10009622	
160	10-19	30	4 / V4	up to 50	4.800 - 8.300	40	◊	40004980	

33010 Grooving cutter

Adjustable TOK grooving cutter with spacers

Application:	For grooving along and across the grain
Material:	Hard and soft wood, wood-based panel material
Design:	Steel body
Tooth:	HW TOK Z2 / Z4 / HW spurs Z4
Feed:	MAN

D mm	B mm	d mm	Z	d (max) mm	n (max) min^{-1}	t (max) mm	DT	Order No.	Price [PG 02]
160	8,0-15	30	4 / V4	50	4.800 - 8.300	32	◊	10156634	
160	12,6-24	30	4 / V4	50	4.800 - 8.300	32	◊	10156636	
180	8-15	30	4 / V4	50	4.300 - 7.400	38	◊	10156637	
180	12,6-24	30	4 / V4	50	4.300 - 7.400	38	◊	10156638	

Spare parts

	Denomination	Dimension mm	DT	Order No.	PG	Price
TOP	HW TOK for B = 8,0 - 15	7,5x12x1,5	◊	10009449	01	
TOP	HW TOK for B = 12,6 - 24	12x12x1,5	◊	10009450	02	
	Clamping wedge for B = 8,0 - 15		◊	10157229	02	
	Clamping wedge for B = 12,6 - 24		◊	10028146	02	
TOP	HW spur	14x14x2	◊	10009453	01	
	Threaded pin DIN 915	M8x16	◊	40002009	02	
	Threaded pin	M5x16	◊	40001987	02	
	Countersunk screw DIN 963	M5x8	◊	40001969	02	
	Countersunk screw DIN 963	M5x6	◊	10119194	02	
	Sliding bar key	SW4	◊	40004852	02	
	Key	SW 2,5	◊	10006088	02	
	Set of rings for B = 8 - 15 mm		◊	10157250	02	
	Set of rings for B = 12,6 - 24 mm		◊	10157251	02	

35010 Radius cutter

TOK quarter round cutter

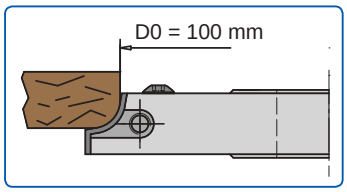

Application:	Rounding
Material:	Hard and soft wood, wood-based panel material
Design:	Aluminium tool body Size 1 (D = 120 mm): suitable for R 3 - R 10 Size 2 (D = 140 mm): suitable for R 12 - R 20 D0 = 100 mm
Tooth:	HW profile knives
Feed:	MAN

D mm	B mm	d mm	Z	d (max) mm	DT	Order No.	Price [PG 02]
120	20	30	2	40	◊	10156730	
140	30	30	2	40	◊	10156731	

Spare parts

Denomination	Dimension mm	DT	Order No.	Price [PG 02]
HW profile plate for 10156730	20x25x2 Gr.1 R8	◊	10157108	
HW profile plate for 10156731	30x35x2 Gr.2 R12	◊	10157115	
Clamping wedge for 10156730	17,5 mm for Gr.1	◊	10157128	
Clamping wedge for 10156731	26 mm for Gr.2	◊	10157129	
Screw	M4x6	◊	10157165	
Threaded pin	M6x16	◊	40001998	
Allen Key	SW3	◊	10006089	

35030 Profile cutter

Universal safety cutter head, 40 mm kerf

Application:	For jointing, rebating and profiling
Material:	Hard and soft wood
Design:	Steel body For profiling depths of up to 17 mm with a flying circle of 133 mm max.
Tooth:	SP or HS
Feed:	MAN

D mm	B mm	d mm	Z	d (max) mm	n (max) min^{-1}	DT	Order No.	Price [PG 02]
93	40	30	2	up to 31,75	6.000 - 9.000	◊	10023096	

Standard and special profile knife catalogue available for download at: www.ake.de/en

35030 Profile cutter

Universal safety cutter head, 40 / 50 mm kerf

Application:	For jointing, rebating and profiling
Material:	Hard and soft wood
Design:	Steel body for profile knives with 40 and 50 mm kerf For profile depths up to 17 mm, with a flying circle of 150 mm max.
Tooth:	SP or HS
Feed:	MAN

D mm	B mm	d mm	Z	d (max) mm	n (max) min^{-1}	DT	Order No.	Price [PG 02]
114	40 / 50	30	2	up to 31,75	5.100 - 7.900	◊	40015575	

Standard and special profile knife catalogue available for download at: www.ake.de/en

35030 Profile cutter

Universal safety cutter head, 60-80 mm kerf

Application:	For profiling
Material:	Hard and soft wood
Design:	Steel body for profile knives with 60 and 80 mm kerf For profile depths up to 30 mm, with a flying circle of 182 mm max.
Tooth:	HS
Feed:	MAN

D mm	B mm	d mm	Z	d (max) mm	DT	Order No.	Price [PG 02]
110	60 / 80	30	2	up to 40	◊	10156640	

Standard and special profile knife catalogue available for download at: www.ake.de/en

35030 Profile cutter

Serrated back profile cutter head

Application:	For profiling
Material:	Hard and soft wood, wood-based panel material
Design:	Steel body with high-precision serration to hold profile knife blanks of 8 or 10 mm thickness
Tooth:	HS, ST, HW, HW super pack
Feed:	MEC

D mm	B mm	d mm	Z	n (max) min^{-1}	DT	Order No. cutter	Price [PG 02]	Order No. Clamping wedge	Price [PG 02]	Order No. dummy piece	Price [PG 02]
122	40	40	2	9.000	◊	10156582		40011422		10110783	
122	60	40	2	9.000	◊	10156586		10110631		10110785	
122	80	40	2	9.000	◊	10156589		10110393		10110786	
122	40	40	4	9.000	◊	10156590		40011422		10110783	
122	60	40	4	9.000	◊	10156591		10110631		10110785	
122	80	40	4	9.000	◊	10156594		10110393		10110786	
122	100	40	4	9.000	◊	10156595		40011650		40011604	
122	130	40	4	9.000	◊	10156596		10110395		40015377	
122	150	40	4	9.000	◊	10156597		10110396		10110787	
122	180	40	4	9.000	◊	10156598		10110638		10110788	
122	230	40	4	9.000	◊	10156607		10110398		40012096	
137	40	50	4	9.000	◊	10156612		40011422		10110783	
137	60	50	4	9.000	◊	10156614		10110631		10110785	
137	80	50	4	9.000	◊	10156615		10110393		10110786	
137	100	50	4	9.000	◊	10156616		40011650		40011604	
137	130	50	4	9.000	◊	10156617		10110395		40015377	
137	150	50	4	9.000	◊	10156619		10110396		10110787	
137	180	50	4	9.000	◊	10156622		10110638		10110788	

Tool body without knives
For knife blanks see chapter knives on page 353-359

Spare parts

Denomination	Dimension mm	DT	Order No.	Price [PG 02]
Threaded pin	M12x20	◊	10157171	
Sliding bar key	SW6	◊	40005681	

35030 Profile cutter

Profile cutter head Powerlock

Abb.: Z=2

Application:	For profiling
Material:	Hard and soft wood, wood-based panel material
Design:	Steel body with HSK 85 holder for Weinig Powerlock system. With high-precision serration to hold profile knife blanks of 8 or 10 mm thickness
Tooth:	HS, ST, HW, HW super pack
Feed:	MEC

D mm	B mm	d mm	Z	n (max) min^{-1}	DT	Order No. rhs	Price [PG 02]	Order No. lhs	Price [PG 02]	Order No. Clamping wedge	Price [PG 02]
90	60	HSK 85WE	2	12.000	◊	10156783		10156796		10157181	
90	80	HSK 85WE	2	12.000	◊	10156792		10156801		10157182	
90	100	HSK 85WE	2	12.000	◊	10156795		10156802		10157183	
90	130	HSK 85WE	2	12.000	◊	10157212		10157216		10157222	
90	150	HSK 85WE	2	12.000	◊	10157217		10157219		10157223	
90	170	HSK 85WE	2	12.000	◊	10157254		10157253		10157224	
90	190	HSK 85WE	2	12.000	◊	10157256		10157255		10157225	
90	210	HSK 85WE	2	12.000	◊	10157258		10157257		10157227	
90	240	HSK 85WE	2	12.000	◊	10157260		10157259		10157228	
90	60	HSK 85WE	4	12.000	◊	10157264		10157261		10157181	
90	80	HSK 85WE	4	12.000	◊	10157262		10157265		10157182	
90	100	HSK 85WE	4	12.000	◊	10157266		10157263		10157183	
90	130	HSK 85WE	4	12.000	◊	10157268		10157267		10157222	
90	150	HSK 85WE	4	12.000	◊	10157270		10157269		10157223	
90	170	HSK 85WE	4	12.000	◊	10157272		10157273		10157224	
90	190	HSK 85WE	4	12.000	◊	10157274		10157275		10157225	
90	210	HSK 85WE	4	12.000	◊	10157276		10157277		10157227	
90	240	HSK 85WE	4	12.000	◊	10157278		10157279		10157228	

Tool body without knives
For knife blanks see chapter knives on page 353-359

Spare parts

Denomination	Dimension mm	DT	Order No.	Price [PG 02]
Threaded pin	M12x20	◊	10157171	
Sliding bar key	SW6	◊	40005681	

35010 Profile cutter

Multi - TOK profile cutter

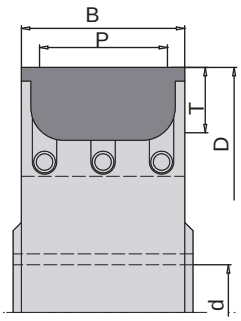

Application:	For profiling
Material:	Hard and soft wood, wood-based panel material
Design:	Steel body with clamping elements For holding HW special profile knives with support plate
Tooth:	HW profile knives
Feed:	MEC

D mm	B mm	d mm	Z	d (max) mm	P	T	Order No.	Price [PG 02]
For mechanical feed								
160	40	35	3	up to 50	31	20	10018203	
160	60	35	3	up to 50	51	25	10018202	
180	60	35	4	up to 50	48	22	10028692	
180	80	35	4	up to 50	60	30	10107420	
For manual feed								
170	50	30	3	up to 50	41	18	10107426	

Knives and support plates will be profiled according to customer request
Profile drawings or wood samples are required
Special profile knives 1 packing unit = 10 pcs.

Spare parts for 10018203 (MEC)

Denomination	Dimension (B) mm	Order No.	Price [PG 02]
Blank	40x35x2,0 Z1	33009263	
Clamping wedge	38	10016489	
Threaded pin	M8x16	40002009	
Support plate		10019297	
Stop screw	M5	40002938	

10018202, 10028629 (MEC)

Dimension (B) mm	Order No.	Price [PG 02]
60x40x2,0 Z1	10014340	
58	10016488	
M8x16	40002009	
	10023992	
M5	40002938	

Spare parts for 10107420 (MEC)

Denomination	Dimension (B) mm	Order No.	Price [PG 02]
Blank	80x45x2,5 Z1	10023442	
Clamping wedge	84	10021472	
Threaded pin	M8x35	40002014	
Support plate		33009948	
Stop screw	M5	40002938	
Deflector			

10107426 (MAN)

Dimension (B) mm	Order No.	Price [PG 02]
50x45x2,0 Z2	10017983	
48	10018714	
M8x16	40002009	
	40003550	
M5	40002938	
	33010961	

35010 Profile cutter

TOK tongue and groove cutter

Application:	For the production of tongue and groove profiles
Material:	Hard and soft wood, wood-based panel material
Design:	Steel body By means of combining different tools a variety of profiles can be produced max 8.000 rpm
Tooth:	HW TOK Z2 / Z4 HW spurs Z4
Feed:	MEC

D mm	B mm	d mm	Z	n(max) rpm	DT	Order No.	Price [PG 02]
140	15	60	4	8.000	◊	10156628	
124	12	60	2	8.000	◊	10156683	
140	15	60	4	8.000	◊	10156681	
140	20	60	4	8.000	◊	10156685	
141	20	60	4	8.000	◊	10156686	
140	20	60	4	8.000	◊	10156687	
154,4	11,6	60	2	8.000	◊	10156688	
154,4	11,6	60	2	8.000	◊	10156689	
171	15	60	4	8.000	◊	10156690	
159	20	60	4	8.000	◊	10156692	

	Denomination	Dimension mm	DT	Order No.	PG	Price
	HW TOK	11,6x12x1,5	◊	10009483	01	
TOP	HW TOK	12x12x1,5	◊	10009450	02	
TOP	HW TOK	15x12x1,5	◊	10009455	01	
TOP	HW TOK	20x12x1,5	◊	10009457	01	
	Clamping wedge for 2/7/8		◊	10157173	02	
	Clamping wedge for 1/3/9		◊	10157174	02	
	Clamping wedge for 4/5/6/10		◊	10157175	02	
TOP	Spur	14x14x2	◊	10009453	01	
	Threaded pin for 2/9	M8x16	◊	40002009	02	
	Threaded pin	M8x12	◊	40002007	02	
	Countersunk screw DIN 963	M5x8	◊	40001969	02	
	Grooving knife	25x13x4	◊	10157178	02	
	Screw for grooving knife	M5x13	◊	10157177	02	
	Sliding bar key	SW4	◊	40004852	02	
	Allen Key	SW3	◊	10006089	02	
	Edge knife 45°	22x16x5	◊	10109412	02	

35010 Panel raising cutter
TOK panel raising cutter

Type A

Type B

Type C

Application:	For the production of panel raising profiles on furniture doors
Material:	Hard and soft wood, wood-based panel material
Design:	Tool body made of light metal with profile knives and panel raising knives. Applied for right-hand rotation, top
Tooth:	HW profile knives
Feed:	MAN

D mm	B mm	d mm	Z	Design	DT	Order No.	Price [PG 02]
200	35	30	2+2	Typ A	◊	10156733	
200	35	30	2+2	Typ B	◊	10156736	
200	35	30	2+2	Typ C	◊	10156737	

Spare knives

Denomination	Dimension mm	DT	Order No. knives	Price [PG 02]	Order No. Clamping wedge	Price [PG 02]
Profiled TOK	20x12x1,5 Typ A	◊	10157117		10157130	
Profiled TOK	20x23x2,0 Typ B	◊	10157118		10157134	
Profiled TOK	20x12x1,5 Typ C	◊	10157119		10157155	
Profiled TOK	60x12x1,5 Typ A	◊	10157125		10157132	
Profiled TOK	50x12x1,5 Typ B	◊	10157126		10157136	
Profiled TOK	60x12x1,5 Typ C	◊	10157127		10157156	

Spare parts

Denomination	Dimension mm	DT	Order No.	Price [PG 02]
Stop screw for panel raising cutter	M6x10	◊	10157166	
Threaded pin	M6x16	◊	40001998	
Allen Key	SW3	◊	10006089	

35010 Glue joint cutter
TOK glue joint cutter

Application:	For glue joints The profile and the counter profile are being cut with the same tool by changing the reference face
Material:	Hard and soft wood
Design:	Steel body with profile knives Adjustable profile seat due to adjustable lateral stop screws
Tooth:	HW TOK Z2
Feed:	MAN

D mm	B mm	d mm	Z	Profile height = minimum wood thickness	DT	Order No.	Price [PG 02]
130	50	30	2	16	◊	10156745	
130	60	30	2	24	◊	10156747	
130	80	30	2	32	◊	10156748	

Glue joint cutter for longitudinal glueing available on request

Spare knives

Allocation	Dimension mm	DT	Order No. Knives	Price [PG 02]	Order No. Clamping wedges	Price [PG 02]
for B = 50	50x24x2	◊	10157120		10157157	
for B = 60	60x24x2	◊	10157123		10157158	
for B = 80	80x24x2	◊	10157124		10157159	

Fig: for B = 50 mm

Fig: for B = 60 mm

Fig: for B = 80 mm

Spare parts

Denomination	Dimension mm	DT	Order No.	Price [PG 02]
Threaded pin	M6x16	◊	40001998	
Allen key	SW3	◊	10006089	

35010 Edge trimming cutter
HW cutter for flush miling

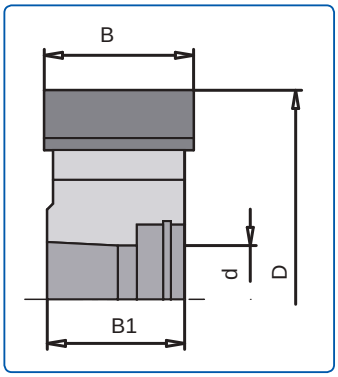

Application:	For pre-cutting solid wood edge bands on keyed aggregates
Material:	All types of edge banding materials, especially suitable for veneer and solid wood, limited suitability for PP, PVS, ABS, melamine
Machine:	Sizing machines and edge banding machines
Design:	Edge cutter with HSK 25 holder and clamping screw This tool is designed with a small axial angle in order to avoid the edge band being pulled downward
Tooth:	HW; the tool can be re-sharpened However, re-sharpening is not recommended, because the tracing rollers have to be adjusted to the new, smaller tool diameter after re-sharpening
Feed:	MEC

D mm	B mm	B1 mm	d mm	Z	n (max) min-1	rhs/lhs	DT	Order No.	Price [PG 02]
70	25	23	HSK 25	4	24.000	re	◊	10025866	
70	25	23	HSK 25	4	24.000	li	◊	10025867	

For DP edge cutters see chapter DP-Tools

Drills

Content

Drills

Products | Page

Solid carbide spiral drills....298

Solid carbide drill pins....299

Solid carbide dowel drills.... 300-301

HW dowel drills.... 302-315

HW cheese head drills.... 316-319

HW+HS Spiral drills.... 320-321

HS Picket drills 322

HW counterbore 323

HW arbor-mounted counterbore.... 324-325

Drill holder 326-327

50070 Solid carbide spiral drills with V tip
continuously cylindric

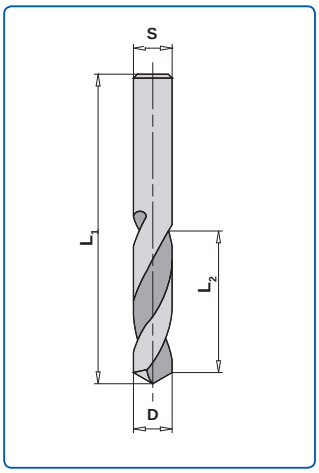

Application: Can be applied for chip board, MDF, plastic material and aluminium
Used in drill holders
(see page 256)

Design: Solid carbide, V tips
Continuously cylindrical

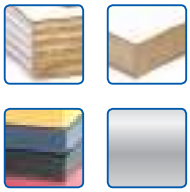

	D mm	L2 mm	L1 mm	Shank mm	Rhs/Lhs	Order No.	Price [PG 02]
	2,5	14	43	2	rhs	10005248	
TOP	3,0	16	46	3	rhs	10005250	
	3,0	27	46	3	lhs	10005251	
TOP	3,0	27	46	3	rhs	10005252	
	3,5	30	52	3	lhs	10005253	
	3,5	20	52	3	rhs	10005254	
	4,0	32	55	4	lhs	10005255	
	4,0	22	55	4	rhs	10005256	

59900 I Solid carbide drill pins

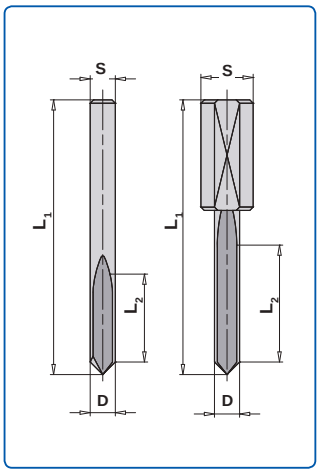

Application: For blind holes in abrasive materials and dry solid wood, applied in adapters with cylindrical shank (see page 257) or with fixed 10 mm shank, with clamping surface and adjusting screw, suitable for RH and LH rotation.

Design: Solid carbide, V tips
chip groove axially parallel
* continuously cylindrical design

	D mm	L2 mm	L1 mm	Shank mm	Order No.	Price [PG 02]
	2,5	15	70,0	10x33	40015741	
TOP	3,0	15	45,0	3	10002045*	
	3,0	23	48,0	3	10040539*	
TOP	3,0	15	57,5	10x33	40015742	
	3,0	23	70,0	10x33	40015743	

51010 Solid carbide extreme dowel drill with round spurs

10 mm cylindrical shank

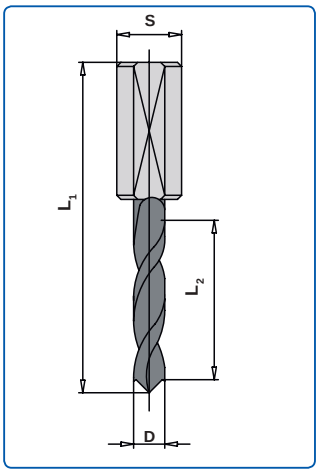

Application: Applied in chucks reducing sleeves etc. on dowel drilling machines and CNC machines. Used for drilling blind holes in solid wood, wood-based material etc. including coated material.
Very good hole edge quality and long tool life even in difficult wooden materials

Design: Solid carbide spiral design with centre point, formed by means of an acute angle, including two negatively ground, reinforced spurs. Enlarged chip grooves. Cylindrical shank with clamping surface and depth adjustment screw
HW micro grain

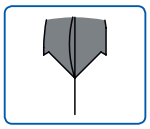

Rigid centre point due to acute angle and reinforced spur result in a longer tool service life

Drill length 57,5 mm

	D mm	L2 mm	L1 mm	Shank mm	Rhs/Lhs	Order No.	Price [PG 02]
TOP	3	18	57,5	10x25	lhs	10022594	
TOP	3	18	57,5	10x25	rhs	10022593	
TOP	4	20	57,5	10x25	lhs	10175553	
TOP	4	20	57,5	10x25	rhs	10178313	
TOP	5	22	57,5	10x27	lhs	10175745	
TOP	5	22	57,5	10x27	rhs	10175744	
TOP	6	22	57,5	10x25	lhs	10022599	
TOP	6	22	57,5	10x25	rhs	10022597	
TOP	8	22	57,5	10x25	lhs	10178314	
TOP	8	22	57,5	10x25	rhs	10178315	

Drill length 70,0 mm

	D mm	L2 mm	L1 mm	Shank mm	Rhs/Lhs	Order No.	Price [PG 02]
TOP	3	18	70,0	10x38	rhs	10159604	
TOP	3	18	70,0	10x38	lhs	10159597	
TOP	4	27	70,0	10x30	lhs	10188241	
TOP	4	27	70,0	10x30	rhs	10188240	
TOP	5	30	70,0	10x28	lhs	10168276	
TOP	5	30	70,0	10x28	rhs	10168272	
TOP	6	30	70,0	10x29	lhs	10022606	
TOP	6	30	70,0	10x29	rhs	10022604	
TOP	8	35	70,0	10x22	lhs	10134198	
TOP	8	35	70,0	10x22	rhs	10134199	
TOP	10	35	70,0	10x20	lhs	10107588	
TOP	10	35	70,0	10x20	rhs	10107586	

51010 Solid carbide dowel drill with flat point

10 x 33 mm cylindrical shank

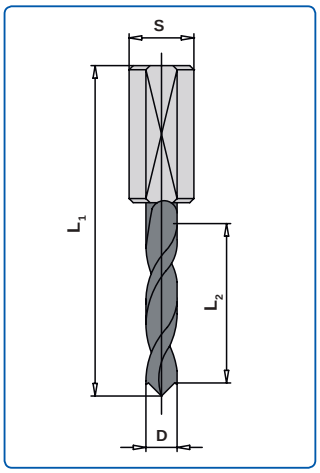

Application: Applied in chucks reducing sleeves etc., on dowel drilling machines and CNC machines. Used for drilling blind holes in solid wood, wood-based material etc. including coated material

Design: Solid carbide spiral design with centre point, formed by means of an acute angle, including two negatively ground, reinforced spurs; enlarged chip grooves; cylindric shank with clamping surface and depth adjustment screw

	D mm	L2 mm	L1 mm	Shank mm	Rhs/Lhs	Order No.	Price [PG 02]
	3,0	16	57,5	10x33	lhs	40015834	
	3,0	16	57,5	10x33	rhs	40015835	
TOP	3,0	27	70,0	10x33	lhs	40015836	
TOP	3,0	27	70,0	10x33	rhs	40015837	

51010 HW extreme dowel drill with round spurs
10 mm cylindrical shank

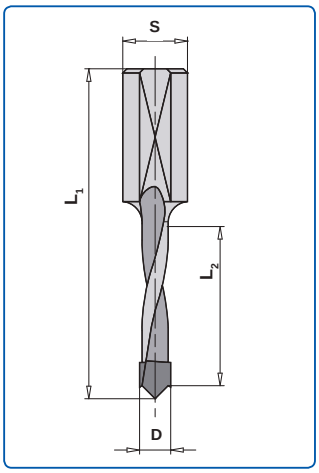

Application: Applied in chucks reducing sleeves etc., on dowel drilling machines and CNC machines. Used for drilling blind holes in solid wood, wood-based material etc. including coated material.
Very good hole edge quality and long tool life even in difficult wooden materials

Design: Carbide cutting head with centre point, formed by means of an acute angle and two negatively ground spurs. Enlarged chip grooves. Spiral part plastic coated. Cylindrical shank with clamping surface and depth adjustment screw
HW micro grain

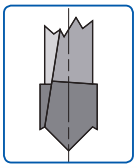

Rigid centre point due to acute angle and reinforced spur result in a longer tool service life

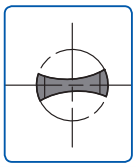

Enlarged chip grooves. The thinner core of the centre point area reduces the feed force and improves the chip removal

Drill length 57,5 mm

	D mm	L2 mm	L1 mm	Shank mm	Rhs/Lhs	Order No.	Price [PG 02]
TOP	5	27	57,5	10x27	lhs	10191688	
TOP	5	27	57,5	10x27	rhs	10191690	
TOP	6	27	57,5	10x27	lhs	10191692	
TOP	6	27	57,5	10x27	rhs	10191693	
TOP	8	27	57,5	10x27	lhs	10191694	
TOP	8	27	57,5	10x27	rhs	10191695	
TOP	10	27	57,5	10x27	lhs	10191697	
TOP	10	27	57,5	10x27	rhs	10174771	

Drill length 70,0 mm

	D mm	L2 mm	L1 mm	Shank mm	Rhs/Lhs	Order No.	Price [PG 02]
TOP	5	35	70,0	10x30	lhs	10137124	
TOP	5	35	70,0	10x30	rhs	10136222	
TOP	6	35	70,0	10x30	lhs	10189593	
TOP	6	35	70,0	10x30	rhs	10189592	
TOP	8	35	70,0	10x30	lhs	10136225	
TOP	8	35	70,0	10x30	rhs	10136224	
TOP	10	35	70,0	10x30	lhs	10158020	
TOP	10	35	70,0	10x30	rhs	10158019	

51010 HW dowel drill with flat point
10 mm cylindrical shank

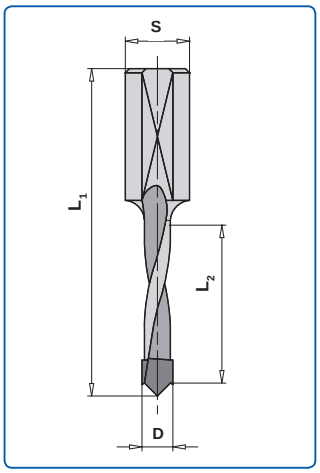

Application: Applied in chucks, Reducing sleeves etc., on dowel drilling machines and CNC machines; used for drilling blind holes in solid wood, wood-based material etc. including coated material

Design: Carbide cutting head with centre point, formed by means of an acute angle and two negatively ground spurs; enlarged chip grooves; spiral part plastic coated; cylindrical shank with clamping surface and depth adjustment screw

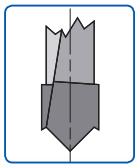

Rigid centre point due to acute angle and reinforced spur result in a longer tool service life

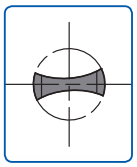

Enlarged chip grooves. The thinner core of the centre point area reduces the feed force and improves the chip removal

Drill length 57,5 mm

D mm	L2 mm	L1 mm	Shank mm	Rhs/Lhs	Order No.	Price [PG 02]
5	27	57,5	10x27	lhs	10014787	
5	27	57,5	10x27	rhs	10014785	
8	27	57,5	10x27	lhs	10017150	
8	27	57,5	10x27	rhs	10015994	

Drill length 70,0 mm

D mm	L2 mm	L1 mm	Shank mm	Rhs/Lhs	Order No.	Price [PG 02]
5	35	70,0	10x30	lhs	10013816	
5	35	70,0	10x30	rhs	10013815	
6	35	70,0	10x30	lhs	10023156	
6	35	70,0	10x30	rhs	10023361	
7	35	70,0	10x30	lhs	40013463	
7	35	70,0	10x30	rhs	40013464	
8	35	70,0	10x30	lhs	40010458	
8	35	70,0	10x30	rhs	10018798	
10	35	70,0	10x30	lhs	10028115	
10	35	70,0	10x30	rhs	10028114	

Drill length 77,0 mm

D mm	L2 mm	L1 mm	Shank mm	Rhs/Lhs	Order No.	Price [PG 02]
8	42	77,0	10x30	lhs	40013465	
8	42	77,0	10x30	rhs	40013466	

51010 HW dowel drill with centre point
without back guidance, 10 mm cylindrical shank

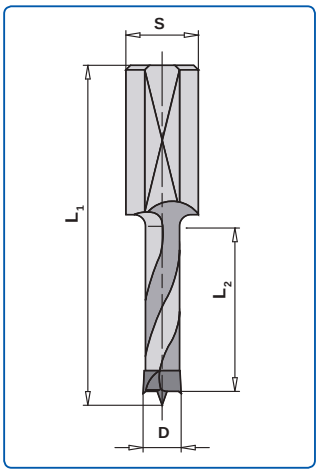

Application: Applied in chucks, reducing sleeves etc., on dowel drilling machines. Used for drilling blind holes in solid wood, wood-based material etc., including coated material

Design: Carbide cutting head with centre point, two knives and negatively ground spurs; enlarged back clearance angle; spiral part plastic coated; cylindrical shank with clamping surface and depth adjustment screw

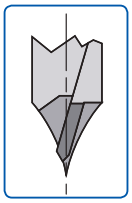

Negatively ground spurs for improved edge quality of the bore hole and longer tool service life

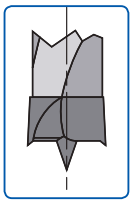

Enlarged back clearance angle for reduced strain and improved chip ejection

Drill length 57,5 mm

D mm	L2 mm	L1 mm	Shank mm	Rhs/Lhs	Order No.	Price [PG 02]
5,0	27	57,5	10x27	lhs	10022438	
5,0	27	57,5	10x27	rhs	10022437	
5,1	27	57,5	10x27	rhs	10022439	
5,1	27	57,5	10x27	lhs	10022440	
5,2	27	57,5	10x27	lhs	10022442	
5,2	27	57,5	10x27	rhs	10022441	
6,0	27	57,5	10x27	lhs	10022444	
6,0	27	57,5	10x27	rhs	10022443	
7,0	27	57,5	10x27	lhs	10022448	
7,0	27	57,5	10x27	rhs	10022447	
8,0	27	57,5	10x27	lhs	10022450	
8,0	27	57,5	10x27	rhs	10022449	
9,0	27	57,5	10x27	lhs	10022455	
9,0	27	57,5	10x27	rhs	10022453	
10,0	27	57,5	10x27	lhs	10022469	
10,0	27	57,5	10x27	rhs	10022468	

Drill length 70,0 mm

D mm	L2 mm	L1 mm	Shank mm	Rhs/Lhs	Order No.	Price [PG 02]
4,0	35	70,0	10x30	lhs	10022478	
4,0	35	70,0	10x30	rhs	10022477	
4,5	35	70,0	10x30	lhs	10174590	
4,5	35	70,0	10x30	rhs	10174592	
5,0	35	70,0	10x30	lhs	10022480	
5,0	35	70,0	10x30	rhs	10022479	
5,5	35	70,0	10x30	lhs	40012741	
5,5	35	70,0	10x30	rhs	40012740	

51010 HW dowel drill with centre point
without back guidance, 10 mm cylindrical shank

D mm	L2 mm	L1 mm	Shank mm	Rhs/Lhs	Order No.	Price [PG 02]
6,0	35	70,0	10x30	lhs	10022482	
6,0	35	70,0	10x30	rhs	10022481	
6,5	35	70,0	10x30	lhs	10174609	
6,5	35	70,0	10x30	rhs	10174607	
7,0	35	70,0	10x30	lhs	10022486	
7,0	35	70,0	10x30	rhs	10022485	
8,0	35	70,0	10x30	lhs	10022491	
8,0	35	70,0	10x30	rhs	10022487	
8,2	35	70,0	10x30	lhs	10024203	
8,2	35	70,0	10x30	rhs	10024202	
9,0	35	70,0	10x30	lhs	10022497	
9,0	35	70,0	10x30	rhs	10022494	
10,0	35	70,0	10x30	lhs	10022501	
10,0	35	70,0	10x30	rhs	10022500	
11,0	35	70,0	10x30	lhs	10022503	
11,0	35	70,0	10x30	rhs	10022502	
12,0	35	70,0	10x30	lhs	10022505	
12,0	35	70,0	10x30	rhs	10022504	
12,7	35	70,0	10x30	lhs	10022507	
12,7	35	70,0	10x30	rhs	10022506	

Drill length 77,0 mm

D mm	L2 mm	L1 mm	Shank mm	Rhs/Lhs	Order No.	Price [PG 02]
5,0	42	77,0	10x30	lhs	10022515	
5,0	42	77,0	10x30	rhs	10022512	
6,0	44	77,0	10x33	lhs	10022521	
6,0	44	77,0	10x33	rhs	10022518	
8,0	44	77,0	10x30	lhs	10022529	
8,0	44	77,0	10x30	rhs	10022525	
10,0	44	77,0	10x30	lhs	10022536	
10,0	44	77,0	10x30	rhs	10022532	
12,0	44	77,0	10x30	lhs	10022543	
12,0	44	77,0	10x30	rhs	10022542	

Spare parts

Denomination	Dimension mm	Order No.	Price [PG 02]
Adjustment screw	M5 x 10	10174969	

51010 HW dowel drill with centre point
with back guidance, 8 x 20 mm cylindrical shank

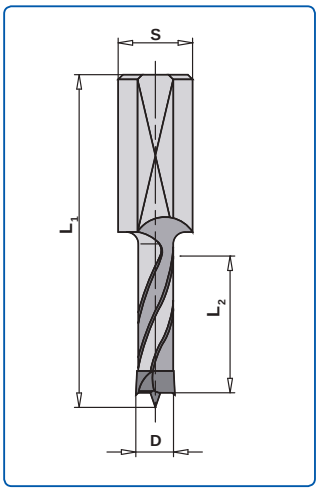

Application: Applied in chucks reducing sleeves etc., on dowel drilling machines. Used for drilling blind holes in solid wood, wood-based material etc., including coated material

Design: Carbide cutting head with centre point, two knives and negatively ground spurs; enlarged back clearance angle; spiral part plastic coated, with back guidance; cylindrical shank with clamping surface and depth adjustment screw

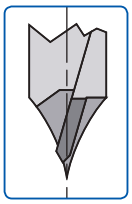

Negatively ground spurs for improved edge quality of the bore hole and longer tool service life

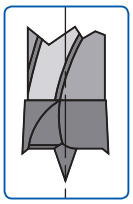

Enlarged back clearance angle for reduced strain and improved chip ejection

Drill length 55,5 mm

D mm	L2 mm	L1 mm	Shank mm	Rhs/Lhs	Order No.	Price [PG 02]
5	30	55,5	8x20	lhs	10022555	
5	30	55,5	8x20	rhs	10022554	
6	30	55,5	8x20	lhs	10022557	
6	30	55,5	8x20	rhs	10022556	
7	30	55,5	8x20	lhs	10022559	
7	30	55,5	8x20	rhs	10022558	
8	30	55,5	8x20	lhs	10022561	
8	30	55,5	8x20	rhs	10022560	
9	30	55,5	8x20	lhs	10022563	
9	30	55,5	8x20	rhs	10022562	
10	30	55,5	8x20	lhs	10022565	
10	30	55,5	8x20	rhs	10022564	

Drill length 67,0 mm

D mm	L2 mm	L1 mm	Shank mm	Rhs/Lhs	Order No.	Price [PG 02]
6	40	67,0	8x20	lhs	10022574	
6	40	67,0	8x20	rhs	10022572	
7	40	67,0	8x20	lhs	10022576	
7	40	67,0	8x20	rhs	10022575	
8	40	67,0	8x20	lhs	10022578	
8	40	67,0	8x20	rhs	10022577	
10	40	67,0	8x20	lhs	10022582	
10	40	67,0	8x20	rhs	10022581	

Due to the back guidance (guide chamfer) centreing of the return stroke is improved and the counterbore can be fixed steplessly on the drill spiral

Spare parts

Denomination	Dimension mm	Order No.	Price [PG 02]
Adjustment screw	M5 x 8	10006037	

51010 HW dowel drill with centre point

with back guidance, 10 mm cylindrical shank long design

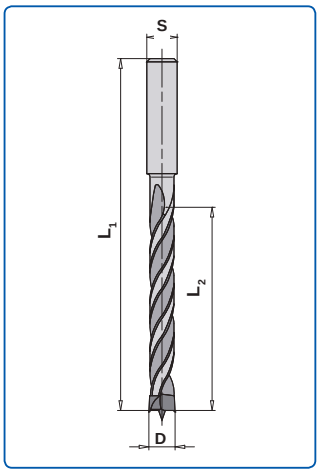

Application: Applied in chucks reducing sleeves etc., on dowel drilling machines. Used for drilling blind holes in soft wood and hard wood

Design: Carbide cutting head with centre point, two knives and negatively ground spurs; enlarged back clearance angle; spiral part plastic coated, with back guidance; cylindrical shank with clamping surface, without depth adjustment screw

Drill length 85,0 mm

D mm	L2 mm	L1 mm	Shank mm	Rhs/Lhs	Order No.	Price [PG 02]
5	50	85,0	10x27	lhs	10022677	
5	50	85,0	10x27	rhs	10022675	
6	50	85,0	10x27	lhs	10022682	
6	50	85,0	10x27	rhs	10022679	
7	50	85,0	10x27	rhs	10174617	
8	50	85,0	10x27	lhs	10022685	
8	50	85,0	10x27	rhs	10022684	
10	50	85,0	10x27	lhs	10022687	
10	50	85,0	10x27	rhs	10022686	
12	50	85,0	10x27	rhs	10022688	

Drill length 105 mm & 110 mm

D mm	L2 mm	L1 mm	Shank mm	Rhs/Lhs	Order No.	Price [PG 02]
5	65	105	10x30	rhs	10174612	
6	65	105	10x30	rhs	10139590	
7	65	105	10x30	rhs	10174619	
8	65	105	10x30	lhs	10174620	
8	65	105	10x30	rhs	10153639	
9	65	105	10x30	rhs	40012564	
10	65	105	10x30	rhs	10170670	
12	65	105	10x30	rhs	10174625	
14	65	105	10x30	lhs	40002197	
14	65	105	10x30	rhs	10005373	
16	80	110	10x25	rhs	40015823	

Due to the back guidance (guide chamfer) centreing of the return stroke is improved and the counterbore can be fixed steplessly on the neck

51010 HW dowel drill with centre point
with back guidance, 10 x 20 mm cylindrical shank

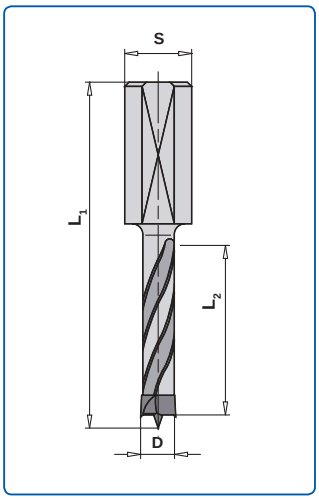

Application: Applied in chucks reducing sleeves etc., on dowel drilling machines; used for drilling blind holes in solid wood, wood-based material etc., including coated material.

Design: Carbide cutting head with centre point, two knives and negatively ground spurs; enlarged back clearance angle; spiral part plastic coated, with back guidance; cylindrical shank with clamping surface and depth adjustment screw

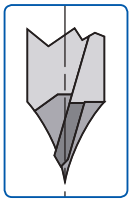

Negatively ground spurs for improved edge quality of the bore hole and longer tool service life

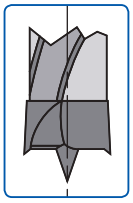

Enlarged back clearance angle for reduced strain and improved chip ejection

Drill length 57,5 mm

D mm	L2 mm	L1 mm	Shank mm	Rhs/Lhs	Order No.	Price [PG 02]
5	30	57,5	10x20	lhs	10021788	
5	30	57,5	10x20	rhs	10021787	
8	30	57,5	10x20	lhs	10021790	
8	30	57,5	10x20	rhs	10021789	
10	30	57,5	10x20	lhs	10022342	
10	30	57,5	10x20	rhs	10022341	
12	30	57,5	10x20	rhs	10022343	
14	30	57,5	10x20	rhs	10022653	

Drill length 70,0 mm

D mm	L2 mm	L1 mm	Shank mm	Rhs/Lhs	Order No.	Price [PG 02]
5	43	70,0	10x20	lhs	10022354	
5	43	70,0	10x20	rhs	10022353	
5,5	43	70,0	10x20	lhs	40013443	
5,5	43	70,0	10x20	rhs	40013444	
6	43	70,0	10x20	lhs	10022356	
6	43	70,0	10x20	rhs	10022655	
8	43	70,0	10x20	lhs	10022358	
8	43	70,0	10x20	rhs	10022357	
8,2	43	70,0	10x20	rhs	40015385	
9	43	70,0	10x20	lhs	10022360	
9	43	70,0	10x20	rhs	10022359	
10	43	70,0	10x20	lhs	10022362	
10	43	70,0	10x20	rhs	10022361	

51010 HW dowel drill with centre point
with back guidance, 10 x 20 mm cylindrical shank

D mm	L2 mm	L1 mm	Shank mm	Rhs/Lhs	Order No.	Price [PG 02]
12	43	70,0	10x20	lhs	10022364	
12	43	70,0	10x20	rhs	10022363	
12,2	43	70,0	10x20	rhs	10152344	
13	43	70,0	10x20	lhs	10022366	
13	43	70,0	10x20	rhs	10022365	
14	43	70,0	10x20	lhs	10022368	
14	43	70,0	10x20	rhs	10022367	
15	43	70,0	10x20	lhs	10022370	
15	43	70,0	10x20	rhs	10022369	
16	43	70,0	10x20	lhs	10022372	
16	43	70,0	10x20	rhs	10022371	

Spare parts

Denomination	Dimensionen mm	Order No.	Price [PG 02]
Adjustment screw	M5 x 10	10174969	

50010 Solid carbide Extreme dowel drill with V tip

for through-holes, 10 mm cylindrical shank

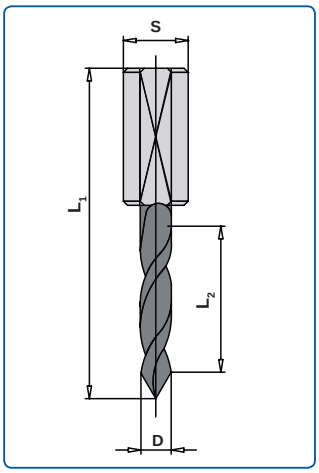

Application: Drilling of through-holes in wood-based material on dowel drilling machines

Design: Solid carbide spiral design, V tip with 60° angle
Cylindrical shank with clamping surface and adjustment screw
Spiral part plastic coated
Very long tool life

n(max) = 12.000 rpm

	D mm	L2 mm	L1 mm	Shank mm	Rhs/Lhs	Order No.	Price [PG 02]
TOP	3	27	70,0	10x30	lhs	10176246	
TOP	3	27	70,0	10x30	rhs	10172460	
TOP	4	35	70,0	10x25	lhs	10173774	
TOP	4	35	70,0	10x25	rhs	10101490	
TOP	5	35	70,0	10x25	lhs	10134201	
TOP	5	35	70,0	10x25	rhs	10134200	
TOP	6	35	70,0	10x25	lhs	10191549	
TOP	6	35	70,0	10x25	rhs	10185921	
TOP	8	35	70,0	10x25	lhs	10167353	
TOP	8	35	70,0	10x25	rhs	10167351	

50010 HW dowel drill with V tip

for through-holes, 10 x 25 mm cylindrical shank, without back guidance

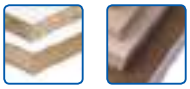

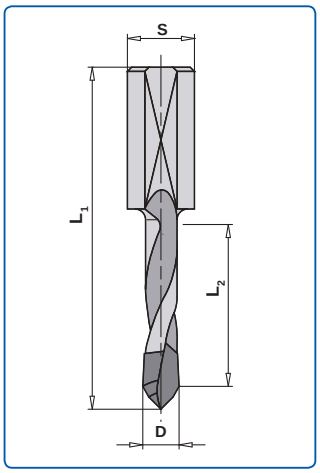

Application: Drilling of through-holes in wood-based material on dowel drilling machines and CNC machines

Design: Carbide cutting head, special quality, V tip with double chamfer; spiral part plastic coated; cylindrical shank with clamping surface and adjustment screw
Long tool life

n(max) = 12.000 rpm

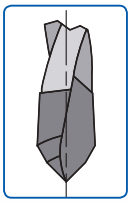

D mm	L2 mm	L1 mm	Shank mm	Rhs/Lhs	Order No.	Price [PG 02]
4	35	70,0	10x25	lhs	40012654	
4	35	70,0	10x25	rhs	40012653	
5	35	70,0	10x25	lhs	10018648	
5	35	70,0	10x25	rhs	10016840	
6	35	70,0	10x25	lhs	40013491	
6	35	70,0	10x25	rhs	40013492	
7	35	70,0	10x25	rhs	40013496	
8	35	70,0	10x25	rhs	40005865	

50010 HW dowel drill with V tip

for through-holes, 10 mm cylindrical shank, without back guidance

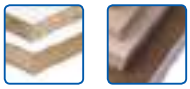

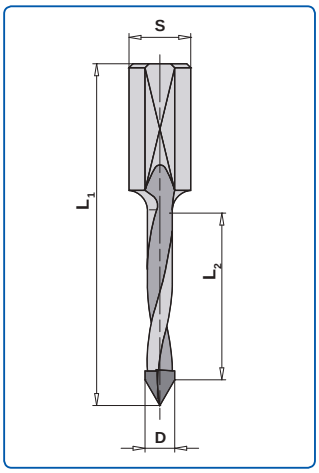

Application: Drilling of through-holes in wood-based material on dowel drilling machines

Design: Carbide cutting head, V tip with 60° angle. Cylindrical shank with clamping surface and adjustment screw. Spiral part plastic coated

n(max) = 12.000 rpm

Drill length 57,5 mm

D mm	L2 mm	L1 mm	Shank mm	Rhs/Lhs	Order No.	Price [PG 02]
3,0	27	57,5	10x24	lhs	10108731	
3,0	27	57,5	10x24	rhs	10108730	
5,1	25	57,5	10x25	rhs	10005757	

Drill length 70,0 mm

D mm	L2 mm	L1 mm	Shank mm	Rhs/Lhs	Order No.	Price [PG 02]
3,0	27	70,0	10x33	lhs	40015857	
3,0	27	70,0	10x33	rhs	40015858	
4,0	35	70,0	10x25	lhs	10027242	
4,0	35	70,0	10x25	rhs	10028188	
4,5	35	70,0	10x25	lhs	40013478	
4,5	35	70,0	10x25	rhs	40010908	
5,0	35	70,0	10x25	lhs	10005752	
5,0	35	70,0	10x25	rhs	10005753	
5,5	35	70,0	10x25	lhs	40013479	
5,5	35	70,0	10x25	rhs	40013480	
6,0	35	70,0	10x25	lhs	10005760	
6,0	35	70,0	10x25	rhs	10005761	
6,5	35	70,0	10x25	lhs	40013481	
6,5	35	70,0	10x25	rhs	40002668	
7,0	35	70,0	10x25	lhs	10028035	
7,0	35	70,0	10x25	rhs	10028034	
7,5	35	70,0	10x25	rhs	40013485	
8,0	35	70,0	10x25	lhs	10005766	
8,0	35	70,0	10x25	rhs	10005767	
9,0	35	70,0	10x25	rhs	40012627	

50010 HW dowel drill with V tip

for through holes, 10 mm cylindrical shank, without back guidance

D mm	L2 mm	L1 mm	Shank mm	Rhs/Lhs	Order No.	Price [PG 02]
10,0	35	70,0	10x25	lhs	10028037	
10,0	35	70,0	10x25	rhs	10028036	
11,0	35	70,0	10x25	rhs	40015856	
12,0	35	70,0	10x25	lhs	10028039	
12,0	35	70,0	10x25	rhs	40010461	

Drill length 77,0 mm

D mm	L2 mm	L1 mm	Shank mm	Rhs/Lhs	Order No.	Price [PG 02]
5,0	45	77,0	10x25	lhs	10005754	
5,0	45	77,0	10x25	rhs	10005755	
6,0	45	77,0	10x25	lhs	10005762	
6,0	45	77,0	10x25	rhs	10005763	
7,0	45	77,0	10x25	lhs	40013483	
7,0	45	77,0	10x25	rhs	40013484	
8,0	43	77,0	10x25	lhs	10005768	
8,0	43	77,0	10x25	rhs	10005769	
9,0	42	77,0	10x25	lhs	40015854	
9,0	42	77,0	10x25	rhs	40012339	
10,0	42	77,0	10x25	lhs	10005770	
10,0	42	77,0	10x25	rhs	10005771	
11,0	40	77,0	10x25	lhs	40013486	
11,0	40	77,0	10x25	rhs	40013487	
12,0	40	77,0	10x25	lhs	10005772	
12,0	40	77,0	10x25	rhs	10005773	

Spare parts

Denomination	Dimension mm	Order No.	Price [PG 02]
Adjustment screw	M5 x 10	10174969	

50010 HW dowel drill with V tip

for through holes, 10 mm cylindrical shank with back guidance

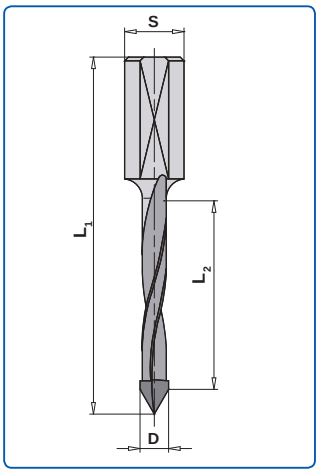

Application: Drilling of through-holes in wood-based material on dowel drilling machines and CNC machines

Design: Carbide cutting head, V tip with 60° angle, cylindrical shank with clamping surface and adjustment screw, spiral part plastic coated, with back guidance

D mm	L2 mm	L1 mm	Shank mm	Rhs/Lhs	Order No.	Price [PG 02]
5	25	57,5	10x20	lhs	10022641	
5	25	57,5	10x20	rhs	10022640	
5	35	70,0	10x25	lhs	10022645	
5	35	70,0	10x25	rhs	10022644	

51010 HW dowel drill with centre point

8 mm cylindrical shank
for Mafell

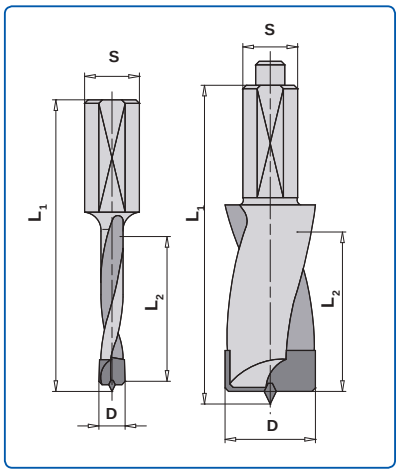

Application: Applied in Mafell Duo Dowel DD40G and DD40P as well as portable routers for drilling blind holes in solid wood, wood-based material etc.

Design: Carbide cutting head, centre point and two wipers with side bevel, tooth geometry designed for high speed, spirale part plastic coated, cylindric shank with clamping surface and adjustment screw, right-hand rotation

D mm	L2 mm	L1 mm	Shank mm	Order No.	Price [PG 02]
5	30	57,5	8x17	10176721	
6	30	57,5	8x17	10176722	
8	30	57,5	8x17	10176723	
10	30	58,0	8x18	10176730	
12	30	58,0	8x18	10176731	
16	30	58/65	8x18	10176732	

52010 HW cheese head drill
Z2 + V2

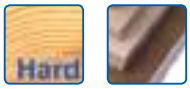

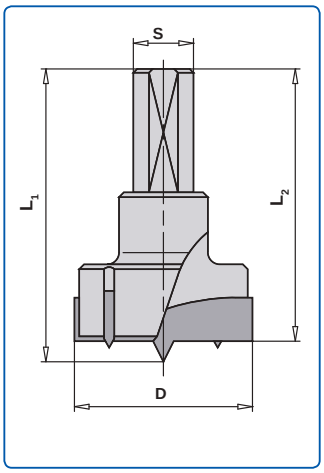

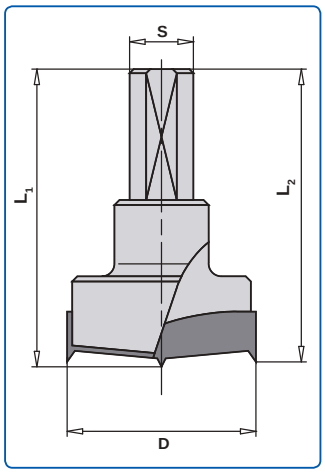

Version with reduced centre point
For hinge locations closed to the top layer

Application: For drilling dimensionally stable and splinter-free blind holes in hard wood, wood-based material etc. (drilling holes for metal fittings)

Design: Two wipers, two inserted spurs and centre point, cylindrical shank with clamping surface and adjustment screw

Drill length 57,5 mm

	D mm	L2 mm	L1 mm	Shank mm	Rhs/Lhs	Order No.	Price [PG 02]
TOP	15	55,5	57,5	10x26	lhs	10005449	
TOP	15	55,5	57,5	10x26	rhs	10005450	
TOP	18	55,5	57,5	10x26	lhs	10005455	
TOP	18	55,5	57,5	10x26	rhs	10005456	
	20	55,5	57,5	10x26	lhs	10005459	
TOP	20	55,5	57,5	10x26	rhs	10005460	
	22	55,5	57,5	10x26	rhs	10005464	
TOP	25	55,5	57,5	10x26	rhs	10005466	
	35	55,5	57,5	10x26	lhs	10005481	
	35	55,5	57,5	10x26	rhs	10005482	

Drill length 70,0 mm

	D mm	L2 mm	L1 mm	Shank mm	Rhs/Lhs	Order No.	Price [PG 02]
TOP	15	68,0	70,0	10x26	lhs	10005451	
TOP	15	68,0	70,0	10x26	rhs	10005452	
	18	68,0	70,0	10x26	lhs	10005457	
	18	68,0	70,0	10x26	rhs	10005458	
	20	68,0	70,0	10x26	lhs	10005461	
TOP	20	68,0	70,0	10x26	rhs	10005462	
	25	68,0	70,0	10x26	lhs	10005467	
	25	68,0	70,0	10x26	rhs	10005468	
	30	68,0	70,0	10x26	lhs	10005477	
TOP	30	68,0	70,0	10x26	rhs	10005478	
TOP	35	68,0	70,0	10x26	lhs	10005483	
TOP	35	68,0	70,0	10x26	rhs	10005484	

HW cheese head drill - Z2 + V2, with reduced centre point
for hinge locations closed to the top layer

D mm	L2 mm	L1 mm	Shank mm	Rhs/Lhs	Order No.	Price [PG 02]
35	68,0	69,0	10x26	rhs	40013433	

52010 HW cheese head drill
Z3 + V3

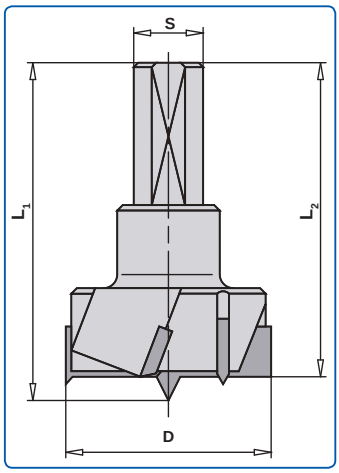

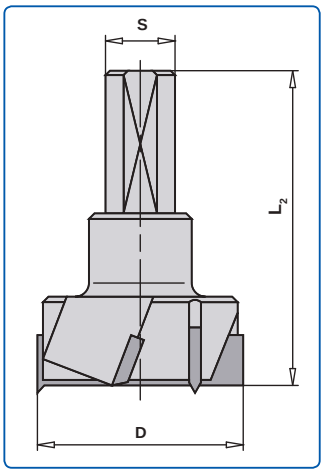

The design without centre point is particularly suitable for drilling down to just before the bottom layer

Application: For drilling dimensionally stable and splinter-free blind holes in solid wood (hard), wood-based material etc. (drilling holes for metal fittings etc.), on drilling machines for fittings and automatic drilling machines

Design: With centre point, three wipers and three inserted spurs, without centre point with three spurs, cylindrical shank with clamping surface and adjustment screw

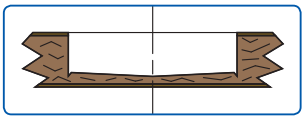

D mm	L2 mm	L1 mm	Shank mm	Rhs/Lhs	Order No.	Price [PG 02]
With centre point						
35	55,5	57,5	10x26	lhs	10005496	
35	55,5	57,5	10x26	rhs	10005497	
Without centre point						
35	55,5	55,5	10x26	rhs	10005505	

The design without centre point is particularly suitable for drilling down to just before the bottom layer

52010 HW cheese head drill with TOK
Z2 + V2

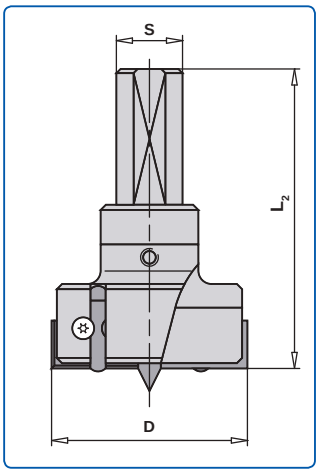

Application: For drilling dimensionally stable and splinter-free blind holes in solid wood (hard) wood-based material etc. (drilling holes for metal fittings etc.)

Design: With two reversible four-sided wiper knives and two reversible spurs; variable centering knife to drill close to the top coat, if necessary; reversible wiper knives are fixed with counter sunk screws for perfect chip removal; shank with clamping surface and adjusting screw

Drill length 55,5 mm

D mm	L2 mm	Shank mm	Rhs/Lhs	Order No.	Price [PG 02]
25	55,5	10x30	rhs	10187339	
30	55,5	10x30	rhs	10187341	
35	55,5	10x30	rhs	10187311	

Drill length 70,0 mm

D mm	L2 mm	Shank mm	Rhs/Lhs	Order No.	Price [PG 02]
25	70,0	10x30	rhs	10187342	
30	70,0	10x30	rhs	10187343	
35	70,0	10x30	lhs	10187345	
35	70,0	10x30	rhs	10187344	

Spare parts

Denomination	Dimension mm	Order No.	Price [PG 02]
HW-TOK	10,9x10,9x1,5 mm für D=25 mm	10187506	
HW-TOK	13,4x1,4x1,5 mm für D=30 mm	10187507	
HW-TOK	15,9x15,9x1,5 mm für D=35 mm	10187509	
HW-reversible front cutter	18,0x5,7x3,5	10006123	
Carbide centre point		10006126	
Torx countersunk screw	M3,5x5,2 mm, T9	10187505	
Torx spur screw	M3,5x5,5 mm, T15	10006072	
Threaded pin for centre point	M5x5	40013510	
Flag-type-key	T9	10020371	
Flag-type-key	T15	10006049	
Allen key	SW 3	10006089	
Length adjustment screw	M5x8	10006037	

52010 HW cheese head drill
Short design Z2+V2

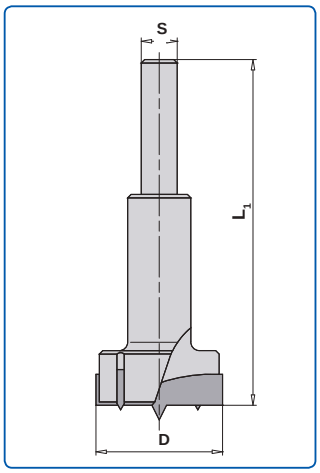

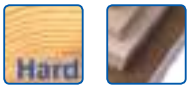

Application: For drilling splinter-free holes in hard wood and wood-based material

Design: Two wipers and centre point; ground spurs up to D 13 mm; from D 14 mm on two inserted spurs; cylindrical shank; right-hand rotation

	D mm	L1 mm	Shank mm	Order No.	Price [PG 02]
	10	90	10x62	10005132	
	13	90	10x62	10005135	
	14	90	10x60	10176894	
TOP	15	90	10x60	10176895	
	16	90	10x60	10176896	
	17	90	10x60	10176897	
TOP	18	90	10x60	10176898	
	19	90	10x60	10176899	
TOP	20	90	10x60	10176900	
	21	90	10x60	10176901	
	22	90	10x60	10176903	
	23	90	10x60	10176904	
	24	90	10x60	10176905	
TOP	25	90	10x60	10176906	
	26	90	10x60	10176907	
	28	90	10x60	10176908	
TOP	30	90	10x60	10176910	
	31	90	10x60	10176911	
	32	90	10x60	10176912	
	33	90	10x60	10176913	
	34	90	10x60	10176914	
TOP	35	90	10x60	10176915	
	38	90	10x60	10176916	
TOP	40	90	10x60	10176917	
	42	90	10x30	10005164	
	45	90	10x50	10176918	
	48	90	10x50	10176919	
	50	90	10x50	10176920	
	55	90	10x50	10177740	
	58	90	10x50	10176921	
	60	90	10x50	10176922	

51010 HW spiral drill
with back guidance

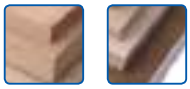

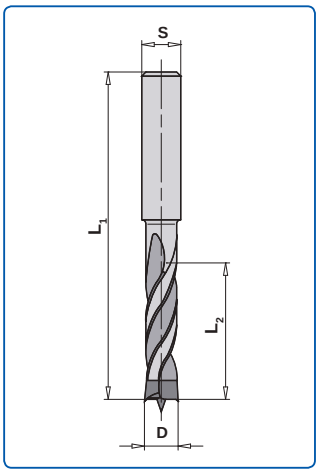

Application: Particularly suitable for drilling precise blind holes and through-holes due to the back guidance; for all types of wood and wood-based material in case of steady guidance

Design: Carbide cutting head with centre point, two knives and negatively ground spurs; enlarged back-clearence angle; spiral part plastic coated; with back guidance*

D mm	L2 mm	L1 mm	Shank mm	Order No.	Price [PG 02]
4,0	55	80	4	10005301	
5,0	60	90	5	10005305	
6,0	75	140	13x50	10005389	
7,0	70	110	7	10005312	
8,0	75	120	8	10005315	
8,0	85	150	13x50	10005390	
10,0	90	140	10	10005320	
10,0	95	160	13x50	10005391	
12,0	100	155	12	10005324	
12,0	105	170	13x50	10005392	
13,0	110	175	13x50	10005393	
14,0	115	180	13x50	10005394	
15,0	120	185	13x50	10005395	
16,0	125	190	16x50	10005396	

* Due to the back guidance (guide chamfer) centreing of the return stroke is improved and the counterbore can be fixed steplessly on the drill spiral

51030 HS spiral drill
Z2, cylindrical

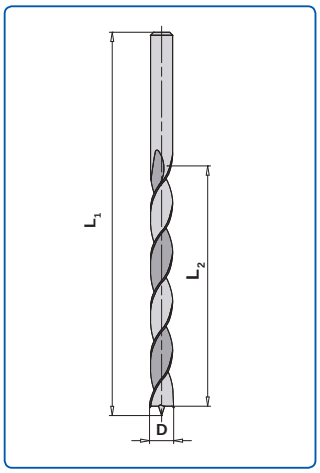

Application: For drilling precise blind holes and through-holes in soft wood and hard wood

Design: With centre point and spurs

Soft

	D mm	L2 mm	L1 mm	Rhs/Lhs	Order No.	Price [PG 02]
TOP	2,0	22	49	rhs	10005260	
	2,0	22	49	lhs	10005259	
TOP	2,5	25	57	rhs	10005262	
	2,5	25	57	lhs	10005261	
TOP	3,0	33	60	rhs	10005264	
TOP	3,0	30	61	lhs	10005263	
TOP	3,5	35	70	rhs	10005266	
	3,5	35	70	lhs	10005265	
TOP	4,0	40	75	rhs	10005268	
	4,0	40	75	lhs	10005267	
TOP	4,5	45	80	rhs	10005270	
	4,5	45	80	lhs	10005269	
TOP	5,0	45	83	rhs	10005272	
	5,0	45	83	lhs	10005271	
	5,5	50	90	rhs	10005274	
TOP	6,0	50	90	rhs	10005276	
	6,0	50	90	lhs	10005275	
	6,5	55	98	rhs	10005278	
TOP	7,0	60	105	rhs	10005280	
	7,5	60	105	rhs	10005281	
TOP	8,0	70	113	rhs	10005283	
	8,5	70	113	rhs	10005284	
	9,0	75	120	rhs	10005286	
TOP	10,0	80	130	rhs	10005288	

51030 HS picket drill
with back guidance and long centre point

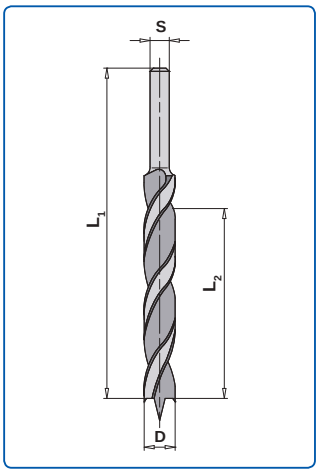

Application: For oblique bore holes such as, for example, picket holes in stair construction, using drilling templates or picket hole drilling jigs; for a longer tool service life in hard wood and exotic wood the respective HW design is to be applied

Design: Two wipers, two ground spurs and particularly long centre point; spiral part with back guidance; stepped cylindrical shank 13 x 50 mm; right-hand rotation

D mm	L2 mm	L1 mm	Shank mm	Order No.	Price [PG 02]
14	115	180	13x50	10005420	
16	125	190	13x50	10005421	
20	140	210	13x50	10005423	
22	150	220	13x50	10005424	

53000 HW counterbore
Z2, cylindrical

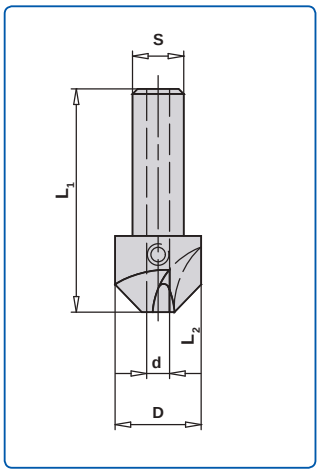

Application: To be used together with cylindrical spiral drills
With back guidance

Design: Two knives, countersinking angle 90°

HW counterbore

	D mm	d mm	L2 mm	L1 mm	Shank mm	Rhs/Lhs	Order No.	Price [PG 02]
TOP	15	3,0	15	58	10x30	rhs	10005947	
TOP	15	3,0	15	58	10x30	lhs	10005946	
TOP	15	4,0	15	58	10x30	rhs	10005951	
TOP	15	5,0	15	58	10x30	rhs	10005955	
TOP	15	6,0	15	58	10x30	lhs	10005958	
TOP	15	6,0	15	58	10x30	rhs	10005959	

Spare parts

Denomination	Dimension mm	Order No.	Price [PG 02]
Threaded pin	M6x6 DIN 913	10005963	

53000 I HW arbor-mounted counterbore

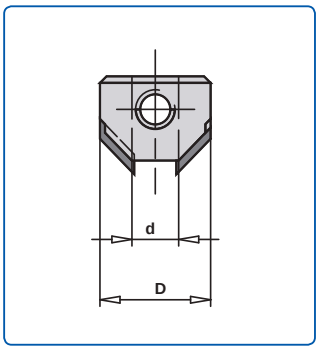

Application: To be used on cylindrical spiral drills
With back guidance

Design: Two HW knives, countersinking angle 90°

	D mm	d mm	Rhs/Lhs	Order No.	Price [PG 02]
	15,5	3	rhs	10005808	
TOP	15,5	4	rhs	10005810	
	15,5	4	lhs	10005809	
TOP	15,5	5	rhs	10005812	
	15,5	5	lhs	10005811	
	15,5	6	rhs	10005814	
	15,5	7	rhs	10005816	
	15,5	7	lhs	10005815	
TOP	15,5	8	rhs	10005818	
	15,5	8	lhs	10005817	
TOP	20,0	10	rhs	10005822	
	20,0	10	lhs	10005821	

Spare parts

Denomination	Dimension mm	Order No.	Price [PG 02]
Threaded pin	M6x6 DIN 916	10014554	

53000 HW arbor-mounted counterbore
clamped on the shank

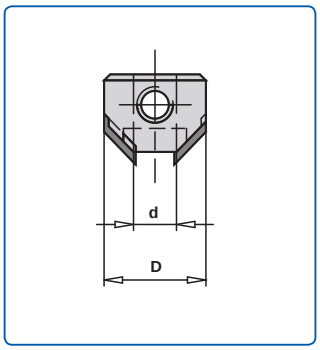

Application: Mounting and clamping on the shank of dowel drills

Design: Two HW knives, countersinking angle 90°

D mm	d mm	for drills Ø mm	Rhs/Lhs	Order No.	Price [PG 02]
15,5	10	5-10	rhs	10005832	
15,5	10	5-10	lhs	10005831	
TOP 20,0	10	5-10	rhs	10005834	
20,0	10	5-10	lhs	10005833	

Spare parts

Denomination	Dimension mm	Order No.	Price [PG 02]
Threaded pin	M6x6 DIN 916	10014554	

82000 Drill holder
Slotted clamping sleeve

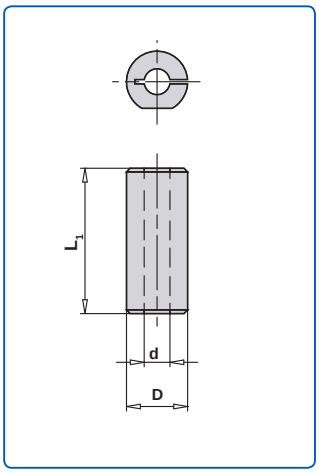

Application:

For holding spiral drills (see page 228) and drill bits (see page 229) with cylindrical shank; shaft with clamping surface, without adjusting screw; suitable for right-hand and left-hand rotation

D mm	d mm	L1 mm	Order No.	Price [PG 02]
10	2,0	23	10006147	
10	2,5	23	10006148	
10	3,0	23	10006149	
10	5,0	23	10006152	
10	6,0	23	10006153	

82000 I Holder with cylindrical shank

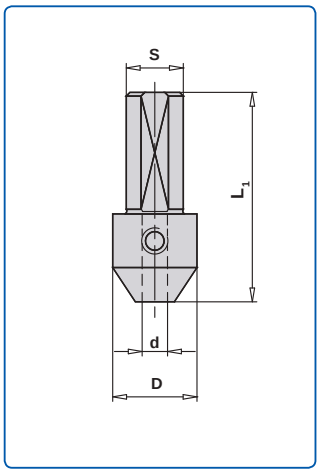

Application:

For holding spiral drills (see page 228) and drill bits (see page 229) with cylindrical shank; shaft with clamping surface, without adjusting screw; suitable for right-hand and left-hand rotation

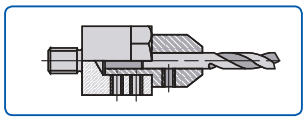

Fig: Applied in a monobloc chuck

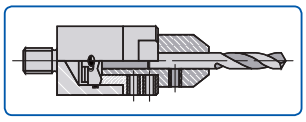

Fig: Applied in a monobloc chuck

D mm	d mm	L1 mm	Shank mm	Order No.	Price [PG 02]
15	2,0	38	10x19	10006154	
15	2,5	38	10x19	10006155	
15	3,0	38	10x19	10006156	
15	3,5	38	10x19	10006158	
15	4,0	38	10x19	10006159	

Spare parts

Denomination	Dimension mm	Order No.	Price [PG 02]
Threaded pin	M6x5 m. R.	40013520	
Allen key SW 3		10006089	

Quick-change chuck for various types of application on request

Knives

Content

Knives

Products	Page
Planer knives	330-337
Turn-over knives	338-352
Blancs with back toothing	353-360

61030 Planer knives 30x3

Quality HS 18%, HW

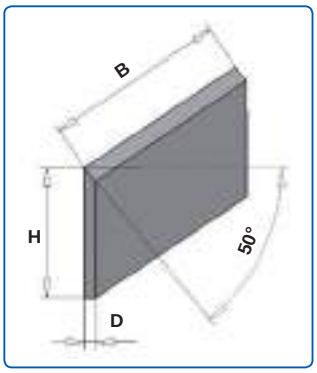

Application:

HS 18% = For soft wood and hard wood

HW-tipped = For hard wood, laminated wood and panel material

Design:

Ground ready for use
Packing unit 2 pcs
Prices are indicated per piece

	Width mm	Height mm	Thickness mm	DT	Order No. HS 18%	Price [PG 02]	Order No. HW	Price [PG 02]
	80	30	3	◊	10013223		10013895	
	120	30	3	◊	10013480		10007302	
TOP	130	30	3	◊	40015586		40015651	
	150	30	3	◊	10007285		10009176	
TOP	180	30	3	◊	40015587		10013901	
	190	30	3	◊	40012338		10100358	
	210	30	3	◊	40000391		10007309	
	230	30	3	◊	10007289		10007310	
	250	30	3	◊	10022254		10007312	
	260	30	3	◊	10021671		10017859	
TOP	270	30	3	◊	10106511		10110494	
	300	30	3	◊	10009356		10007313	
	310	30	3	◊	10009314		10009218	
	350	30	3	◊	10023659		10007315	
	400	30	3	◊	10013387		10007317	
	410	30	3	◊	10009322		10007319	
	450	30	3	◊	40000404		10007321	
	500	30	3	◊	10028612		10041808	
	510	30	3	◊	10024704		10007324	
	520	30	3	◊	10020417		10041809	
	530	30	3	◊	40000407		10009411	
	610	30	3	◊	10013161		10024127	
	630	30	3	◊	10024703		40003161	
	640	30	3	◊	10009380		10007329	
	710	30	3	◊	40009499		10017858	
	810	30	3	◊	10022779		10007331	

61030 Planer knives 35x3
Quality HS 18%, HW

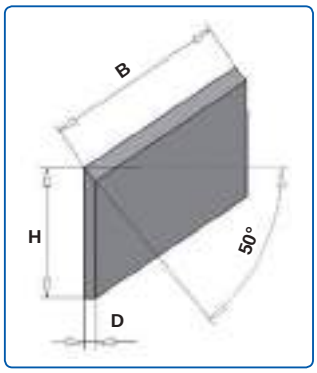

Application:

HS 18%	=	For soft wood and hard wood
HW-tipped	=	For hard wood, laminated wood and panel material

Design:

Ground ready for use
Packing unit 2 pcs
Prices are indicated per piece

	Width mm	Height mm	Thickness mm	DT	Order No. HS 18%	Price [PG 02]	Order No. HW	Price [PG 02]
	250	35	3	◊	10009292		10009196	
	260	35	3	◊	40000592		10041812	
	270	35	3	◊	10106280		10110496	
	300	35	3	◊	10029021		10041813	
	310	35	3	◊	10022846		10026495	
	350	35	3	◊	10009319		10009223	
	400	35	3	◊	10024662		10007318	
TOP	410	35	3	◊	40015284		10009227	
	450	35	3	◊	10104872		10007322	
TOP	500	35	3	◊	10026359		10030833	
TOP	510	35	3	◊	10013104		10007325	
	520	35	3	◊	10020335		10041815	
	530	35	3	◊	10030684		10041816	
TOP	610	35	3	◊	10031855		10007327	
TOP	630	35	3	◊	40000604		10027187	
TOP	640	35	3	◊	10007298		40002376	
	710	35	3	◊	10101966		10041817	
	810	35	3	◊	10021924		10007332	

60070 Knives for system Brück

HL and cobalt quality

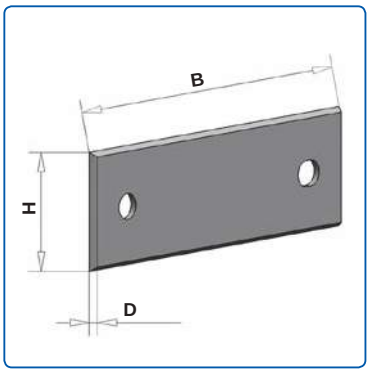

Application:
HL = For soft wood
Cobalt = For soft wood and hard wood

Design:
Ground ready for use
Disposable TOK = cannot be resharpened
Packing unit 20 pcs up to width = 260 mm
Packing unit 12 pcs from width = 300 mm
Prices are indicated per piece

Width mm	Height mm	Thickness mm	DT	Order No. HL	Price [PG 02]	Order No. Kobalt	Price [PG 02]
60	18,6	1	◊	10108727		10108729	
80	18,6	1	◊	40012815		40002502	
100	18,6	1	◊	40000634		40015677	
105	18,6	1	◊	10102172		10102173	
110	18,6	1	◊	10102176		10102175	
120	18,6	1	◊	10025696		10102178	
130	18,6	1	◊	10102026		40009494	
136	18,6	1	◊	40009498		10102182	
150	18,6	1	◊	40008623		10031019	
170	18,6	1	◊	10102185		10102186	
180	18,6	1	◊	40003509		10031397	
186	18,6	1	◊	10102189		10102190	
190	18,6	1	◊	10014486		10102192	
210	18,6	1	◊	10014921		10102194	
230	18,6	1	◊	40000637		40015079	
240	18,6	1	◊	10102197		10102198	
250	18,6	1	◊	10102200		10102201	
260	18,6	1	◊	10014484		10029512	
300	18,6	1	◊	40010793		10102203	
305	18,6	1	◊	10102204		10102205	
310	18,6	1	◊	10042387		10102207	
320	18,6	1	◊	10100830		10102209	
350	18,6	1	◊	10102210		10102211	
360	18,6	1	◊	10102212		10102213	
400	18,6	1	◊	40006550		10102214	
410	18,6	1	◊	10018695		10102215	
420	18,6	1	◊	10102216		10102217	
450	18,6	1	◊	10015981		10102218	
460	18,6	1	◊	10100975		10102220	
500	18,6	1	◊	10102221		40005962	
510	18,6	1	◊	10101684		40014627	
520	18,6	1	◊	10102223		10102224	
530	18,6	1	◊	10015980		10102225	
600	18,6	1	◊	10102226		10102227	
610	18,6	1	◊	10023744		10102228	
630	18,6	1	◊	10101682		10102229	
640	18,6	1	◊	40005413		10102230	
660	18,6	1	◊	10102232		10102233	
710	18,6	1	◊	10102234		10102235	
810	18,6	1	◊	10102236		10102237	

60070 Knives for system Brück
HL quality

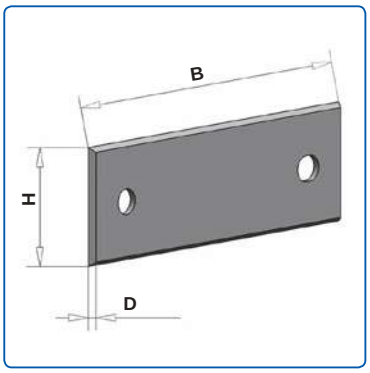

Application: For soft wood

Design: Ground ready for use
Disposable TOK = cannot be resharpened

Packing unit 20 pcs up to width = 260 mm
Packing unit 12 pcs from width = 300 mm

Prices are indicated per piece

Width mm	Height mm	Thickness mm	Machine	DT	Order No.	Price [PG 02]
205	18,6	1	HolzHer, Hema	◊	40006562	
280	18,6	1	Mafell	◊	40000639	
300	18,6	1	HolzHer, Hema	◊	40000641	
300	18,6	1	Mafell	◊	40000640	
320	18,6	1	Mafell	◊	40008827	
350	18,6	1	HolzHer, Hema	◊	40009406	

60030 Knives for system Centrofix
Quality HS 18%

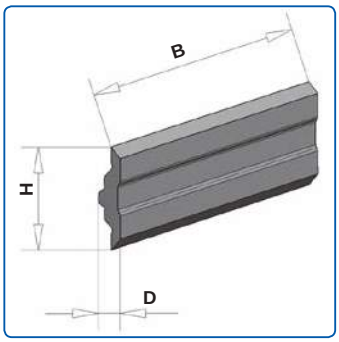

Application: HS 18 % = For soft wood and hard wood

Design: Ground ready for use
Disposable TOK = cannot be resharpened

Packing unit 2 pcs
Prices are indicated per piece

Available also in HW

	Width mm	Height mm	Thickness mm	DT	Order No.	Price [PG 02]
	50	12	2,7	◊	10042188	
	60	12	2,7	◊	10017434	
	80	12	2,7	◊	10042265	
	100	12	2,7	◊	40003708	
	120	12	2,7	◊	10042270	
	130	12	2,7	◊	10031777	
	136	12	2,7	◊	10042273	
	150	12	2,7	◊	10042274	
	180	12	2,7	◊	40010794	
	190	12	2,7	◊	10042276	
	210	12	2,7	◊	10042277	
	230	12	2,7	◊	10101712	
	240	12	2,7	◊	40006645	
TOP	310	12	2,7	◊	10013238	
	400	12	2,7	◊	10024764	
TOP	410	12	2,7	◊	40006200	
	420	12	2,7	◊	10024497	
	430	12	2,7	◊	10018410	
	500	12	2,7	◊	10103127	
TOP	510	12	2,7	◊	10019888	
TOP	520	12	2,7	◊	40007794	
	530	12	2,7	◊	40005756	
	540	12	2,7	◊	10100478	
	600	12	2,7	◊	40012730	
	610	12	2,7	◊	10100479	
TOP	630	12	2,7	◊	10018811	
	640	12	2,7	◊	10042179	
	810	12	2,7	◊	10100480	

60030 / 60070 Knives for system Centrolock / Weinig

Quality HS 18 %, HW

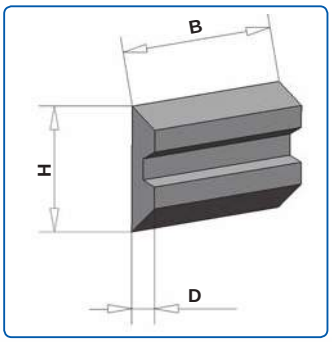

Application:

HS 18 % = For soft wood and hard wood
HW = For hard wood, laminated wood and panel material

Design:

Ground ready for use
TOK = can be resharpened

M42 - black oxide coated
Packing unit 2 pcs
Prices are indicated per piece

	Width mm	Height mm	Thickness mm	DT	Order No. HS 18%	Price [PG 02]	Order No. HW	Price [PG 02]
	20	16	3	◊	10100634		10101141	
	60	16	3	◊	10100637		10101142	
TOP	80	16	3	◊	10100639		10041559	
	100	16	3	◊	40011198		10101143	
TOP	130	16	3	◊	40002379		40015446	
	150	16	3	◊	10100641		10041560	
TOP	170	16	3	◊	10031241		10031688	
	180	16	3	◊	10100642		10101144	
TOP	190	16	3	◊	10100643		10020595	
	210	16	3	◊	10101132		10101187	
	230	16	3	◊	10025405		10017355	
TOP	240	16	3	◊	10101709		40015447	
	260	16	3	◊	10101134		10101188	
TOP	270	16	3	◊	10101136		40016138	
TOP	310	16	3	◊	10101139		10101189	
	460	16	3	◊	10101140		10101190	

60030 Knives for system Terminus
Quality HS 18%

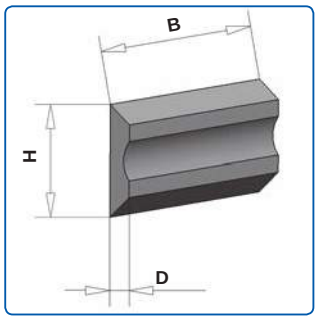

Application: HS 18% = For soft wood and hard wood

Design: Ground ready for use
TOK = can be resharpened

Packing unit 2 pcs
Prices are indicated per piece

Available also in HW

Width mm	Height mm	Thickness mm	DT	Order No.	Price [PG 02]
50	14	2,5	◊	10041818	
60	14	2,5	◊	10041819	
80	14	2,5	◊	10041821	
100	14	2,5	◊	10016798	
110	14	2,5	◊	10041822	
120	14	2,5	◊	10026751	
130	14	2,5	◊	40010764	
136	14	2,5	◊	10041824	
140	14	2,5	◊	40002272	
150	14	2,5	◊	10041827	
160	14	2,5	◊	10041828	
170	14	2,5	◊	40003450	
180	14	2,5	◊	40015637	
186	14	2,5	◊	10041829	
190	14	2,5	◊	10030863	
200	14	2,5	◊	10041830	
210	14	2,5	◊	10031772	
220	14	2,5	◊	10041831	
230	14	2,5	◊	40015602	
240	14	2,5	◊	10030961	
250	14	2,5	◊	10041832	
260	14	2,5	◊	40010788	
270	14	2,5	◊	40011993	
300	14	2,5	◊	10041833	
310	14	2,5	◊	10031773	
350	14	2,5	◊	10041834	
360	14	2,5	◊	10041835	
400	14	2,5	◊	10041836	
410	14	2,5	◊	40010787	
420	14	2,5	◊	10041837	
510	14	2,5	◊	10041838	
610	14	2,5	◊	10041839	

60030 I Knives for system Tersa
60070 I Quality HW, HS and HS M42

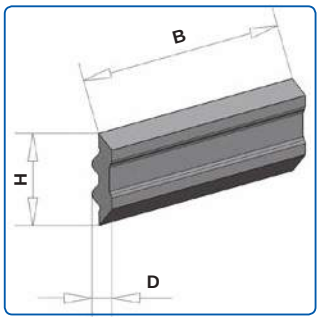

Application:

Solid carbide = For hard wood, laminated wood and panel material

HS = For soft wood and hard wood

HS M42 = For soft wood

Design:

Ground ready for use

Disposable TOK = cannot be resharpened

M42 - black oxide coated

Packing unit 2 pcs

Prices are indicated per piece

	Width mm	Height mm	Thickness mm	DT	Order No. HW	Price [PG 02]	Order No. HS	Price [PG 02]	Order No. HS M42	Price [PG 02]
	60	10	2,3	◊	40011475		10028436		10153532	
	80	10	2,3	◊	40000211		10028437		10153533	
TOP	100	10	2,3	◊	10017832		10028438		10153534	
	110	10	2,3	◊	40009221		40008485		10153535	
	120	10	2,3	◊	10014494		10026611		10153536	
	130	10	2,3	◊	10015031		10014208		10153537	
	150	10	2,3	◊	40000215		40000148		10153538	
	170	10	2,3	◊	40000216		10024019		10153539	
	180	10	2,3	◊	40000217		40004210		10153540	
TOP	210	10	2,3	◊	10015023		10031844		10153541	
TOP	230	10	2,3	◊	40000220		40004211		10153542	
	250	10	2,3	◊	40000221		40000187		10153543	
TOP	260	10	2,3	◊	40000222		10101520		10153544	
	280	10	2,3	◊	10101679		40015992		10153545	
	300	10	2,3	◊	10015024		10021300		10153546	
TOP	310	10	2,3	◊	40006757		10103105		40012737	
	350	10	2,3	◊	40000227		10026483		10153547	
	360	10	2,3	◊	40000228		40000193		10153548	
	400	10	2,3	◊	10015022		10022144		10153549	
TOP	410	10	2,3	◊	40006756		10023233		40012738	
	420	10	2,3	◊	10101870		40009757		10153550	
	430	10	2,3	◊	10101871		10016490		10153551	
	450	10	2,3	◊	40000232		40000197		10153552	
	500	10	2,3	◊	10018542		10016946		10153553	
TOP	510	10	2,3	◊	10020306		10015656		10143759	
	520	10	2,3	◊	10024394		10100544		10153554	
	530	10	2,3	◊	40011354		40002744		10153555	
	610	10	2,3	◊	10101953		10022151		10153556	
TOP	630	10	2,3	◊	10021972		10015180		40015615	
TOP	640	10	2,3	◊	10014307		10100537		10143760	
	710	10	2,3	◊			10025157		10153557	
	810	10	2,3	◊			40008077		10153558	

60070 I Turn-over knives for Rali hand planer

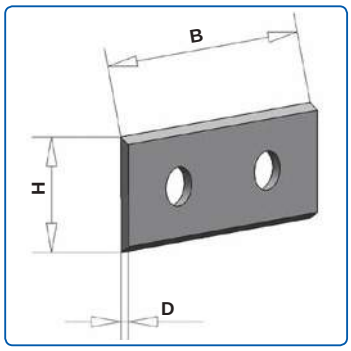

Application:

HS 18 % = For soft wood and hard wood
HW = For hard wood, laminated wood and panel material

Design:

Ground ready for use
Disposable TOK = cannot be resharpened

Packing unit 10 pcs
Prices are indicated per piece

Width mm	Height mm	Thickness mm	Quality	for Rali-Type	DT	Order No.	Price [PG 02]
30	12	1	HS 18%	G30 rebate plane	◊	10102248	
TOP 48	12	1	HS 18%	105 / 220	◊	10102247	
48	12	1	HW	105 / 220	◊	40000753	

Further qualities (hardness, bending strength) and dimensions available

63070 I HW turn-over knives 35°

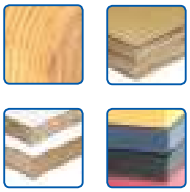

Application:	K05 = For hard wood, laminated wood and panel material K01 = For panel material and plastic material
Design:	Ground ready for use Disposable TOK = cannot be resharpened Packing unit 10 pcs Prices are indicated per piece

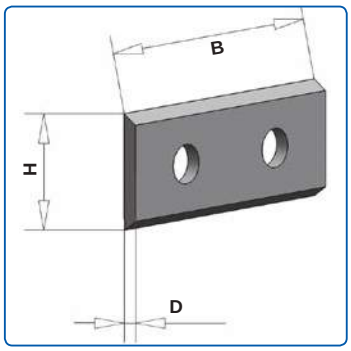

2 cutting edges (35°)

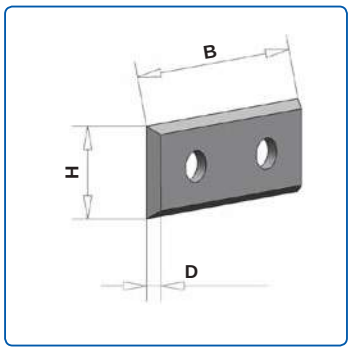

4 cutting edges (35°)

2 cutting edges (35°)

	Width mm	Height mm	Thickness mm	Order No. K05	Price [PG 01]	Order No. K01	Price [PG 01]
	7,5	12	1,5	10009449			
	7,65	12	1,5	10009477			
	9,6	12	1,5	10009480			
	11,6	12	1,5	10009483			
TOP	15	12	1,5	10009455		10009492	
TOP	20	12	1,5	10009457		10022241	
	25	12	1,5	40016017			
TOP	30	12	1,5	10009464		10009500	
TOP	40	12	1,5	10009466		10023095	
TOP	50	12	1,5	10009474		10009503	
	60	12	1,5	10009476			
	80	13	2,2	10009478			
	100	13	2,2	10009481			
	120	13	2,2	10009484			

4 cutting edges (35°)

	Width mm	Height mm	Thickness mm	Order No. K05	PG	Price	Order No. K01	Price [PG 01]
TOP	12	12	1,5	10009450	02		40005307	
	20	12	1,5	10009521	01		10102314	
TOP	30	12	1,5	10009523	01		10102315	
	40	12	1,5	10009524	01			
	50	12	1,5	10009525	01		10102316	
	50	12	1,7				10009526	
TOP	60	12	1,5	10009527	01			

63070 I HW turn-over knives 45°

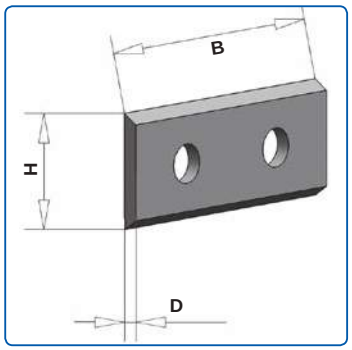

Application: K05 = For hard wood, laminated wood and panel material
K01 = For panel material and plastic material

Design: Ground ready for use
Disposable TOK = cannot be resharpened

Packing unit 10 pcs
Prices are indicated per piece

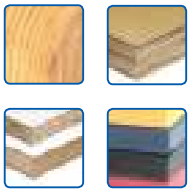

2 cutting edges (45°)

	Width mm	Height mm	Thickness mm	Quality	DT	Order No.	Price [PG 01]
TOP	15	12	1,5	K05	◊	10022249	
	20	12	1,5	K05	◊	10019782	
TOP	30	12	1,5	K05	◊	10018999	
	40	12	1,5	K05	◊	10022250	
TOP	50	12	1,5	K05	◊	10022251	
	60	12	1,5	K05	◊	10022252	

63070 I HW wipers and spurs

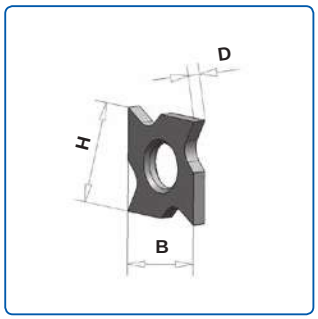

Standard-raker for grooving cutter head and adjustable grooving cutter head

	Width mm	Height mm	Thickness mm	Quality	DT	Order No.	Price [PG 01]
TOP	18	18	1,95	HW	◊	10009494	
	18	18	2,45	HW	◊	10009495	
	18	18	2,95	HW	◊	10009496	

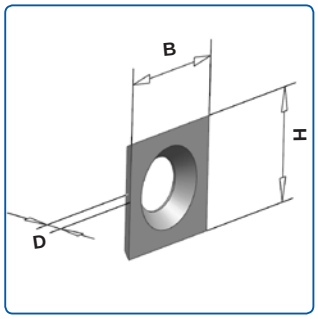

HW spurs, 4 cutting edges (30°- 35°)

	Width mm	Height mm	Thickness mm	Quality	Clamping system	with chip breaker groove	DT	Order No.	PG	Price
	10,5	10,5	1,5	HW			◊	10009482	01	
	13,0	13,0	2,5	HW	Oppold		◊	10018835	01	
	13,6	13,6	2,0	HW		X	◊	10013923	01	
	14,0	14,0	1,2	HW	Holzher		◊	10022232	01	
TOP	14,0	14,0	1,2	HW			◊	10009452	01	
TOP	14,0	14,0	1,7	HW			◊	10009454	01	
TOP	14,0	14,0	2,0	HW			◊	10009453	01	
TOP	14,3	14,3	2,5	HW			◊	10009520	02	
	15,0	15,0	2,0	HW			◊	10009493	01	
TOP	15,0	15,0	2,5	HW			◊	40007373	01	
TOP	20,0	14,3	2,5	HW		X	◊	10009522	01	
	22,0	19,0	2,0	HW			◊	10009497*	01	

* 3 cutting edges

63070 I HW turn-over knives

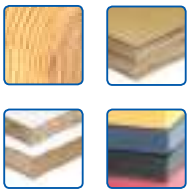

Application:	HW = For soft wood, hard wood, laminated wood and panel material
Design:	Ground ready for use Disposable TOK = cannot be resharpened Packing unit 10 pcs Prices are indicated per piece

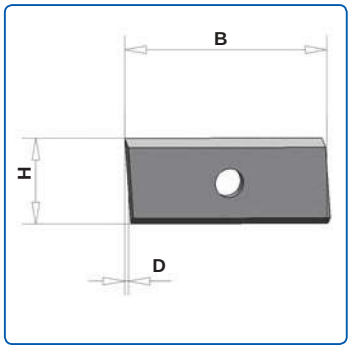

TOK with chamfer,
2 cutting edges

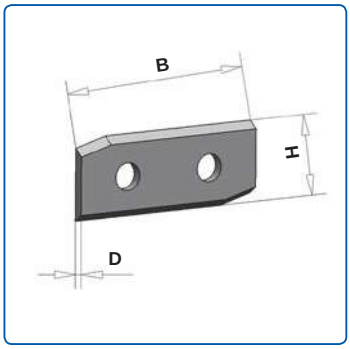

TOK with bevel,
2 cutting edges

TOK with chamfer, 2 cutting edges

Width mm	Height mm	Thickness mm	Quality	rhs/lhs	DT	Order No.	Price [PG 01]
30	12	1,5	HW	li	◊	10022236	
30	12	1,5	HW	re	◊	10020537	
50	12	1,5	HW	li	◊	10022234	
50	12	1,5	HW	re	◊	10022235	

TOK with bevel, 2 cutting edges

Width mm	Height mm	Thickness mm	Quality	rhs/lhs	DT	Order No.	Price [PG 01]
30	12	1,5	HW	li	◊	10009462	
30	12	1,5	HW	re	◊	10009463	
50	12	1,5	HW	li	◊	10009472	
50	12	1,5	HW	re	◊	10009473	

63070 HW turn-over knives

With rounded edges and with pointed edges

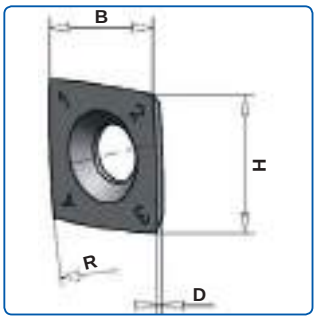

Application: To be applied in planer heads and jointing cutter heads
HW = For soft wood, hard wood and panel material

Design: Ground ready for use
Disposable TOK = cannot be resharpened

Packing unit 10 pcs
Prices are indicated per piece

With rounded edges

	Width mm	Height mm	Thickness mm	Radius	Quality	DT	Order No.	Price [PG 01]
TOP	15	15	2,5	50	HW	◊	10102511	
TOP	15	15	2,5	115	HW	◊	10149346	
TOP	15	15	2,5	150	HW	◊	10152889	

With pointed edges

	Width mm	Height mm	Thickness mm	Radius	Quality	DT	Order No.	Price [PG 01]
	15	15	2,5	50	HW	◊	10152890	
	15	15	2,5	100	HW	◊	10152891	
TOP	15	15	2,5	150	HW	◊	10152892	

63070 HW turn-over knives
For system Versofix

Application:	HW = For soft wood, hard wood, laminated wood and panel material
Design:	Ground ready for use Disposable TOK = cannot be resharpened
	Packing unit 10 pcs Prices are indicated per piece

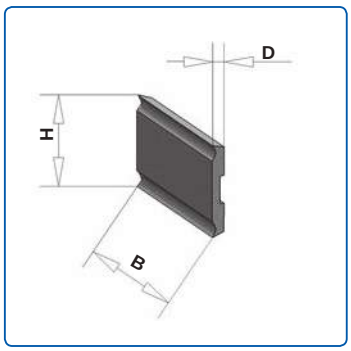

For System Versofix. With back groove
non-coated [1661]

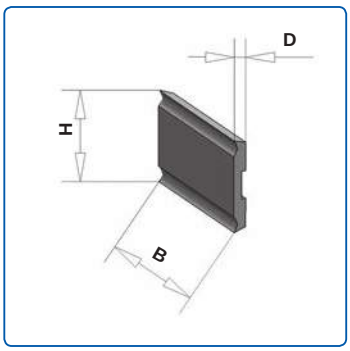

For System Versofix. With back groove
TIN coated [1661]

For system Versofix. With back groove, TIN coated [1661]

Width mm	Height mm	Thickness mm	Design	DT	Order No.	Price [PG 02]
20	5,5	1,1	without chamfer	◊	10016255	
20	10,0	1,5	without Chamfer	◊	10102359	
30	6,5	1,1	without Chamfer	◊	10022273	
30	10,0	1,5	without Chamfer	◊	10021311	
50	6,5	1,1	without Chamfer	◊	10022274	
50	10,0	1,5	without Chamfer	◊	10021279	
50	10,0	1,5	with Chamfer	◊	10017542	

For system Versofix. With back groove, non-coated [1661]

Width mm	Height mm	Thickness mm	Design	DT	Order No.	Price [PG 02]
20	5,5	1,1	without Chamfer	◊	10102441	
20	10,0	1,5	without Chamfer	◊	10102446	
30	6,5	1,1	without Chamfer	◊	10102443	
30	10,0	1,5	without Chamfer	◊	10100711	
50	6,5	1,1	without Chamfer	◊	10102444	
50	10,0	1,5	without Chamfer	◊	40000676	
50	10,0	1,5	with Chamfer	◊	10102447	

63070 HW turn-over knives
System Oppold, Hundegger, Weinmann, Weinig

Application: HW = For soft wood, hard wood, laminated wood and panel material

Design: Ground ready for use
Disposable TOK = cannot be resharpened

Packing unit 10 pcs
Prices are indicated per piece

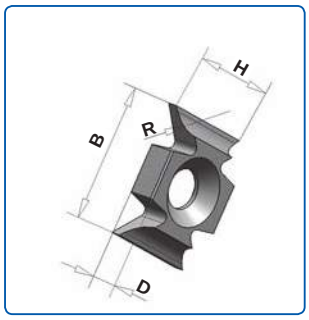

For system Oppold

Width mm	Height mm	Thickness mm	Quality	DT	Order No.	Price [PG 02]
30	12	1,5	HW	◊	10009547	
44,5	15	1,5	HW	◊	10102357	

HW edge knives. System Oppold

Width mm	Height mm	Thickness mm	Edge	Quality	Order No.	Price [PG 02]
22	16	5	45°	HW	10109412	
22	16	5	R 1,5	HW	10022276	
22	16	5	R 2	HW	10022277	
22	16	5	R 2,5	HW	10022278	
22	16	5	R 3	HW	10107583	

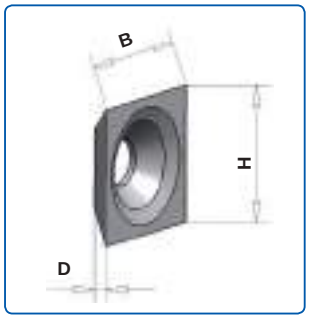

TOK. System Hundegger

Width mm	Height mm	Thickness mm	Quality	Order No.	Price [PG 02]
TOP 21	21	5,5	HW	10015491	

TOK. System Hundegger / Weinmann / Weinig

Width mm	Height mm	Thickness mm	Quality	Order No.	Price [PG 02]
17	17	2	HW	10014012	
19	19	2	HW	10017958	

63070 I HW edge knives

Application: To be applied in window tools and profile tools
For soft wood, hard wood, laminated wood and panel material

Design: Ground ready for use
Disposable TOK = cannot be resharpened

Packing unit 1 pc
Prices are indicated per piece

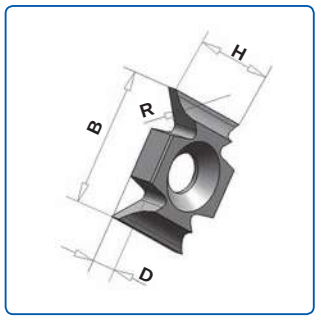

Edge knives for MEC feed

Width mm	Height mm	Thickness mm	Radius	Quality	Order No.	Price [PG 02]
16	22	5	45°	HW	10109412	
16	22	5	1,5	HW	10022276	
16	22	5	2,0	HW	10022277	
16	22	5	2,5	HW	10022278	
16	22	5	3,0	HW	10107583	
16	22	5	4,0	HW	40003967	
16	22	6	5,0	HW	10157339	

Edge knives for system Leitz - MEC feed

Width mm	Height mm	Thickness mm	Radius	Quality	Order No.	Price [PG 02]
15	20,0	8,0	11/0 - 45°	HW	10116013	
15	22,3	9,0	12/0 R3	HW	10107377	
15	20,0	9,0	12/1 R3	HW	10152671	
15	20,0	7,3	12/3 R2	HW	10119426	
15	18,3	7,3	12/3 R2F	HW	10152672	
15	20,0	7,0	12/4 R1,5	HW	10152673	
15	22,3	10,0	12/5 R3F	HW	10152674	
15	22,3	7,3	13/0 (R1) N=5	HW	10152675	
15	22,3	9,0	13/1 (R1) N=7	HW	10152676	
15	22,3	7,3	16/0	HW	10106249	

Edge knives for system Leitz - MAN feed

Width mm	Height mm	Thickness mm	Radius	Quality	Order No.	Price [PG 02]
15	23,0	8,0	21/0 - 45°	HW	40016091	
15	23,0	9,0	22/0 R3	HW	40012181	
15	23,0	7,3	22/3 R2	HW	40008690	
15	23,0	7,0	22/4 R1,5	HW	10152677	
15	23,0	9,0	22/5 R3F	HW	10152678	
15	23,0	9,0	22/1 R3	HW	10152679	
15	25,7	7,3	24/0 R5	HW	10152680	
15	25,7	7,3	24/1 R5	HW	10109612	

63070 I HW mini turn-over knives

Application: HW = For soft wood, hard wood, laminated wood and panel material

Design: Ground ready for use
Disposable TOK = cannot be resharpened

Packing unit 10 pcs
Prices are indicated per piece

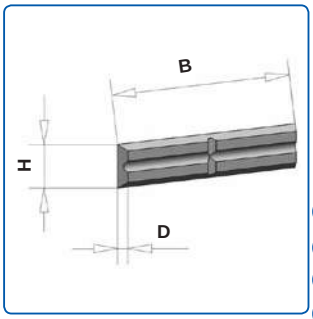

Mini TOK with back groove and cross groove, 4 cutting edges

	Width mm	Height mm	Thickness mm	Quality	Order No.	Price [PG 01]
	20	4,1	1,1	HW	10006964	
	20	5,5	1,1	HW	10006965	
TOP	25	5,5	1,1	HW	10006966	
TOP	30	5,5	1,1	HW	10006967	
TOP	40	5,5	1,1	HW	10009507	
TOP	50	5,5	1,1	HW	10006968	

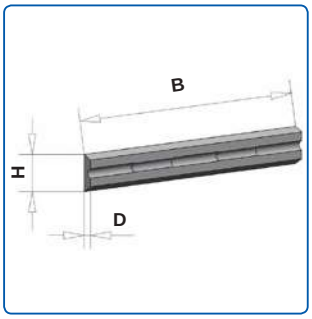

Mini TOK with back groove for portable planers, 2 cutting edges

	Width mm	Height mm	Thickness mm	Quality	Order No.	Price [PG 01]
TOP	56,0	5,5	1,1	HW	10009513	
	60,0	5,5	1,1	HW	10009514	
	75,5	5,5	1,1	HW	10009515	
TOP	80,5	5,5	1,1	HW	10102061	
	80,5	5,8	1,2	HW	10009516	
TOP	82,0	5,5	1,1	HW	10009517	
	102,0	5,5	1,1	HW	10022256	

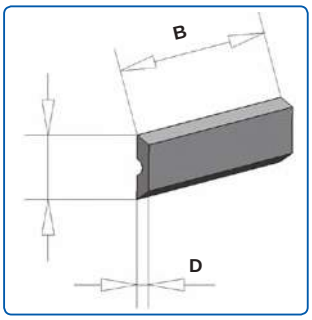

Mini TOK with face groove, 2 cutting edges

	Width mm	Height mm	Thickness mm	Quality	Order No.	Price [PG 01]
	7,7	8	1,5	HW	10022262	
	9,7	8	1,5	HW	10101123	
	11,7	8	1,5	HW	10013991	
TOP	14,7	8	1,5	HW	10013999	
TOP	19,7	8	1,5	HW	10020269	
	24,7	8	1,5	HW	10022266	
TOP	30,0	8	1,5	HW	10014024	
TOP	35,0	8	1,5	HW	10022267	
TOP	40,0	8	1,5	HW	10026542	
TOP	50,0	8	1,5	HW	10022268	
	60,0	8	1,5	HW	10021809	
	80,0	8	1,5	HW	10022269	
	100,0	8	1,5	HW	10022270	
	120,0	8	1,5	HW	10022271	

63070 I HW mini turn-over knives

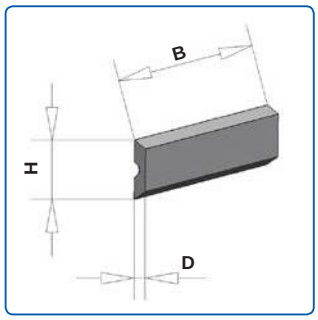

Mini TOK with face groove, 2 cutting edges

Width mm	Height mm	Thickness mm	Quality	Order No.	Price [PG 01]
12	5,5	1,1	HW	10009485	
20	5,5	1,1	HW	10009458	
30	5,5	1,1	HW	10009501	
40	5,5	1,1	HW	10009510	
50	5,5	1,1	HW	10009511	

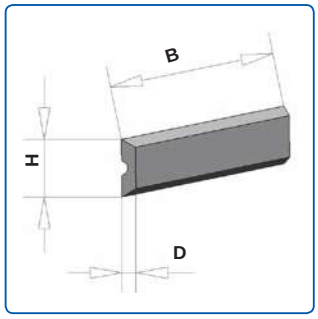

Mini TOK with face groove, 4 cutting edges

Width mm	Height mm	Thickness mm	Quality	Order No.	Price [PG 01]
20	5,5	1,1	HW	10009499	
30	5,5	1,1	HW	10009465	
40	5,5	1,1	HW	10009488	
50	5,5	1,1	HW	10009489	

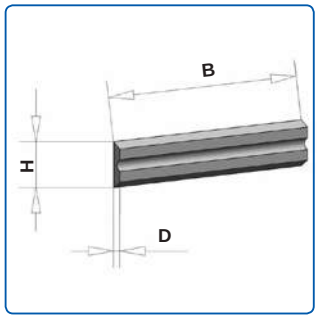

Mini TOK with back groove, 2 cutting edges

Width mm	Height mm	Thickness mm	Quality	Order No.	Price [PG 01]
12	5,5	1,1	HW	10009451	
20	5,5	1,1	HW	10009505	
30	5,5	1,1	HW	10009506	
40	5,5	1,1	HW	10009502	
50	5,5	1,1	HW	10009512	

Mini TOK with back groove, 4 cutting edges

Width mm	Height mm	Thickness mm	Quality	Order No.	Price [PG 01]
20	5,5	1,1	HW	40002439	
30	5,5	1,1	HW	10009509	
40	5,5	1,1	HW	40000665	
50	5,5	1,1	HW	40000662	

62010 I HW radius turn-over knives

Application: For TOK rounding cutter heads

Design: Ground ready for use
Disposable TOK = cannot be resharpened

Packing unit 10 pcs
Prices are indicated per piece

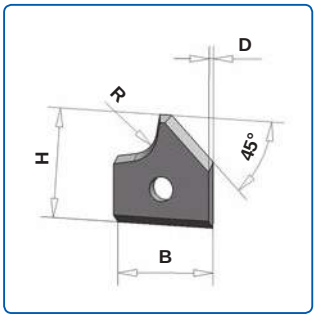

Fig.: Bevel - TOK left

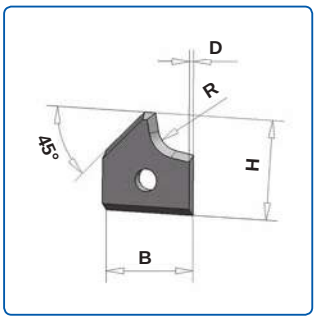

Fig.: Bevel - TOK right

Bevel TOK

Width mm	Height mm	Thickness mm	Radius mm	Qual-ity	Re/Li	DT	Order No.	Price [PG 02]
16	17,5	2	2 / 45°	HW	li	◊	10105228	
16	17,5	2	2 / 45°	HW	re	◊	10105235	
16	17,5	2	3 / 45°	HW	li	◊	10041321	
16	17,5	2	3 / 45°	HW	re	◊	10041322	
16	17,5	2	4 / 45°	HW	li	◊	10105229	
16	17,5	2	4 / 45°	HW	re	◊	10105236	
16	17,5	2	5 / 45°	HW	li	◊	10041352	
16	17,5	2	5 / 45°	HW	re	◊	10041353	
16	17,5	2	6 / 45°	HW	li	◊	40009325	
16	17,5	2	6 / 45°	HW	re	◊	40009324	
24	20	2	6 / 45°	HW	li	◊	10105230	
24	20	2	6 / 45°	HW	re	◊	10105238	
24	20	2	7 / 45°	HW	li	◊	10105231	
24	20	2	7 / 45°	HW	re	◊	10105239	
24	20	2	8 / 45°	HW	li	◊	10105232	
24	20	2	8 / 45°	HW	re	◊	10105240	
24	20	2	9 / 45°	HW	li	◊	10105233	
24	20	2	9 / 45°	HW	re	◊	10105241	
24	20	2	10 / 45°	HW	li	◊	10105234	
24	20	2	10 / 45°	HW	re	◊	10105242	

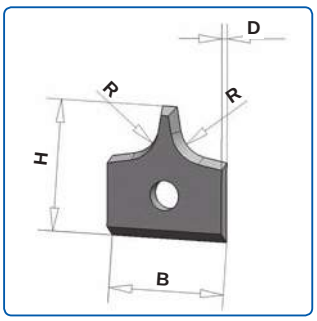

Double radius TOK

Width mm	Height mm	Thickness mm	Radius mm	Quality	DT	Order No.	Price [PG 02]
16	17,5	2	2	HW	◊	10009564	
16	17,5	2	3	HW	◊	10009565	
16	17,5	2	4	HW	◊	10009566	
16	17,5	2	5	HW	◊	10042291	
24	20	2	6	HW	◊	10010672	
24	20	2	7	HW	◊	10041052	
24	20	2	8	HW	◊	10010674	
24	20	2	9	HW	◊	10010675	
24	20	2	10	HW	◊	10010676	

62010 I HW rounding scraper

Application:	To be applied on edge banding machines
Design:	Ground ready for use Disposable TOK = cannot be resharpened Packing unit 1 pc Prices are indicated per piece

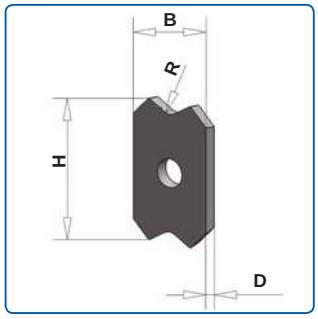

HW rounding scraper - standard

Width mm	Height mm	Thickness mm	Radius/bevel mm	DT	Quality	Order No.	Price [PG 02]
12	20	2	45°	◊	HW	10010909	
12	20	2	0,8	◊	HW	10010889	
12	20	2	1,0	◊	HW	10010890	
12	20	2	1,5	◊	HW	10041220	
12	20	2	2,0	◊	HW	10040875	
12	20	2	2,5	◊	HW	10010893	
12	20	2	3,0	◊	HW	10010894	
12	20	2	3,5	◊	HW	10010895	
12	20	2	4,0	◊	HW	10010896	
12	20	2	4,5	◊	HW	10010897	
12	20	2	5,0	◊	HW	10010898	

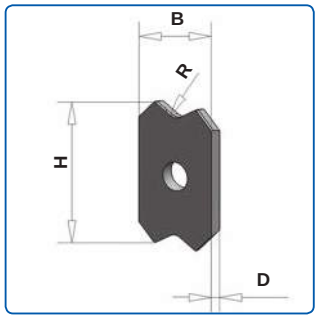

HW rounding scraper - anti stress whitening

Width mm	Height mm	Thickness mm	Radius/bevel mm	DT	Quality	Order No.	Price [PG 02]
12	20	2	1,5	◊	HW	10041420	
12	20	2	2,0	◊	HW	10105115	
12	20	2	3,0	◊	HW	10041098	

62010 I HW radius and bevel turn-over knives

Application: Applied in TOK rounding cutters

Design: Ground ready for use
Disposable TOK = cannot be resharpened

Packing unit 10 pcs
Prices are indicated per piece

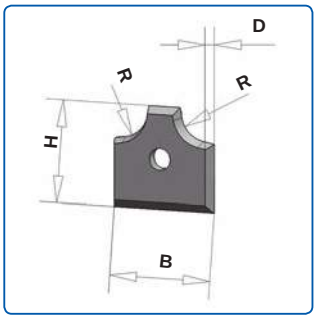

Width mm	Height mm	Thickness mm	Radius/bevel mm	Quality	DT	Order No.	Price [PG 02]
12	12	1,5	2	HW	◊	10027095	
12	12	1,5	3	HW	◊	40010959	
12	12	1,5	4	HW	◊	10111852	
12	12	1,5	45°	HW	◊	10111904	
12	13	2,0	2	HW	◊	10108816	
12	13	2,0	2,5	HW	◊	10107782	
12	13	2,0	3	HW	◊	10019565	

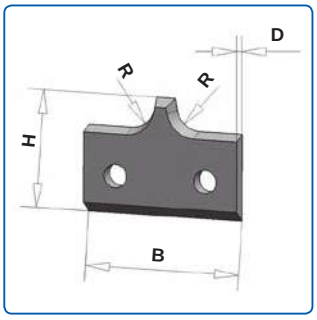

Width mm	Height mm	Thickness mm	Radius mm	Quality	DT	Order No.	Price [PG 02]
30	17	2	5	HW	◊	10027272	
30	17	2	6	HW	◊	10111856	
30	17	2	7	HW	◊	10111857	
30	17	2	8	HW	◊	40003508	

62010 I HW radius turn-over knives

Application: Applied in TOK rounding cutters for edge banding machines

Design: Ground ready for use
Disposable TOK = cannot be resharpened

Packing unit 10 pcs
Prices are indicated per piece

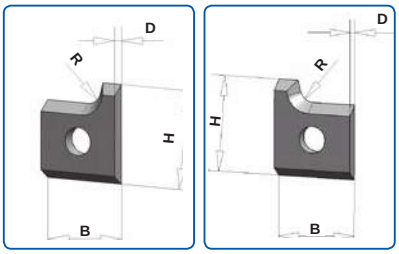

left right

Width mm	Height mm	Thickness mm	Radius mm	Quality	Re/ Li	DT	Order No.	Price [PG 02]
12	14,5	2	2	HW	li	◊	10111708	
12	14,5	2	2	HW	re	◊	10100362	
12	14,5	2	2,5	HW	li	◊	10016519	
12	14,5	2	2,5	HW	re	◊	10016520	
12	14,5	2	3	HW	li	◊	10106422	
12	14,5	2	3	HW	re	◊	10106421	

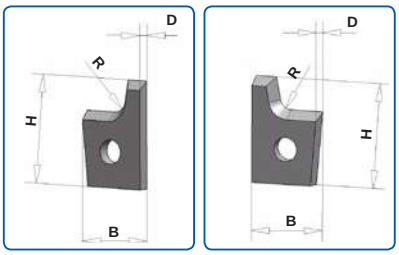

left right

Width mm	Height mm	Thickness mm	Radius mm	Quality	Rhs/ Lhs	DT	Order No.	Price [PG 02]
12	18	2	2	HW	lhs	◊	10014840	
12	18	2	2	HW	rhs	◊	10014841	
12	18	2	3	HW	lhs	◊	10023933	
12	18	2	3	HW	rhs	◊	10023932	

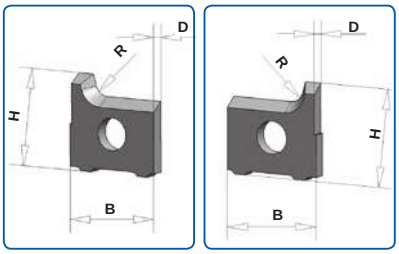

left right

Width mm	Height mm	Thick-ness mm	Radius mm	Quality	Rhs/Lhs	DT	Order No.	Price [PG 02]
15	14,5	2	2	HW	lhs	◊	10042286	
15	14,5	2	2	HW	rhs	◊	10042285	
15	14,5	2	2,5	HW	lhs	◊	40007470	
15	14,5	2	2,5	HW	rhs	◊	40007471	
15	14,5	2	3	HW	lhs	◊	10016132	
15	14,5	2	3	HW	rhs	◊	10016131	

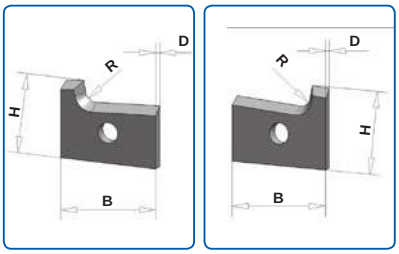

left right

Width mm	Height mm	Thick-ness mm	Radius mm	Quality	Rhs/Lhs	DT	Order No.	Price [PG 02]
19,6	15,2	2	2	HW	lhs	◊	10101053	
19,6	15,2	2	2	HW	rhs	◊	10101054	
19,6	15,2	2	3	HW	lhs	◊	10042212	
19,6	15,2	2	3	HW	rhs	◊	10042213	

62010 HW radius turn-over knives

Double radius turn over knives

Application:	For TOK rounding cutter heads
Design:	Ground ready for use Disposable TOK = cannot be resharpened
	Packing unit 10 pcs Prices are indicated per piece

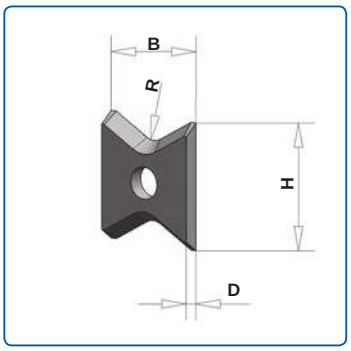

Turn-over knives 13 x 16 mm

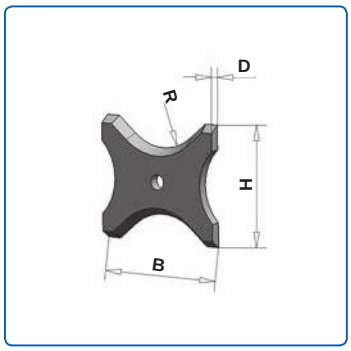

Turn-over knives 20 x 21 / 26 x 24 mm

Turn-over knives 13 x 16 mm

Width mm	Height mm	Thickness mm	Radius/bevel mm	Quality	DT	Order No.	Price [PG 02]
13	16	2	2 / 5°	HW	◊	10041187	
13	16	2	2 / 15°	HW	◊	10111821	
13	16	2	3 / 5°	HW	◊	10009550	
13	16	2	3 / 15°	HW	◊	10111824	
13	16	2	4 / 5°	HW	◊	10009551	
13	16	2	4 / 15°	HW	◊	10111825	

Turn-over knives 20 x 21 / 26 x 24 mm

Width mm	Height mm	Thickness mm	Radius mm	Quality	DT	Order No.	Price [PG 02]
20	21	2	5	HW	◊	10009552	
20	21	2	6	HW	◊	10009553	
20	21	2	7	HW	◊	10009554	
20	21	2	8	HW	◊	10009555	
26	24	2	9	HW	◊	10009556	
26	24	2	10	HW	◊	10009557	
26	24	2	11	HW	◊	10009558	
26	24	2	12	HW	◊	10009559	

62010 Blanks with back toothing
Super pack

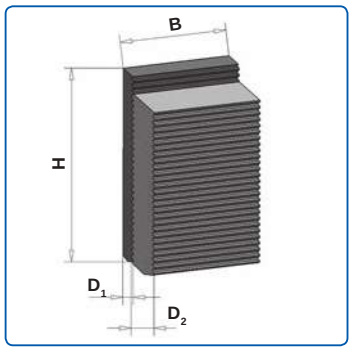

Application: For profile cutter heads with 90° back toothing. Knife thickness 10 mm

For hard wood, laminated wood and panel material
H = 38 mm: planing
H = 50 mm: PD max. 12 mm

Design: HW knife with back toothing to be applied with support plate
Unprofiled

Packing unit 1 pc
Prices are indicated per piece

Knives

Width mm	Height mm	Thick-ness mm	DT	Order No. Knife	Price [PG 02]
40	38	3,2	◊	10141408	
50	38	3,2	◊	33013989	
60	38	3,2	◊	10130824	
80	38	3,2	◊	10139613	
100	38	3,2	◊	10121199	
120	38	3,2	◊	10153039	
130	38	3,2	◊	10153040	
150	38	3,2	◊	10153041	
170	38	3,2	◊	10141407	
180	38	3,2	◊	10153042	
200	38	3,2	◊	10153043	
210	38	3,2	◊	33015151	
230	38	3,2	◊	10153044	
310	38	3,2	◊	10153045	
330	38	3,2	◊	10153046	
40	50	3,2	◊	10116661	
50	50	3,2	◊	33014001	
60	50	3,2	◊	33014125	
80	50	3,2	◊	10153047	
100	50	3,2	◊	10121421	
120	50	3,2	◊	10153048	
130	50	3,2	◊	10153049	
150	50	3,2	◊	10153050	
170	50	3,2	◊	33013980	
180	50	3,2	◊	10153051	
200	50	3,2	◊	10153052	
210	50	3,2	◊	10153053	
230	50	3,2	◊	10153054	
310	50	3,2	◊	10153055	
330	50	3,2	◊	10153056	

Support plate

Height mm	Thick-ness mm	DT	Order No. Support plate	Price [PG 02]
35	7,1	◊	33014874	
35	7,1	◊	33013990	
35	7,1	◊	10130826	
35	7,1	◊	33014322	
35	7,1	◊	10116065	
35	7,1	◊	10153057	
35	7,1	◊	10116064	
35	7,1	◊	33014175	
35	7,1	◊	33014177	
35	7,1	◊	10153059	
35	7,1	◊	10153060	
35	7,1	◊	10153061	
35	7,1	◊	10153062	
35	7,1	◊	10153063	
35	7,1	◊	10153064	
47	7,1	◊	33014118	
47	7,1	◊	33014002	
47	7,1	◊	33014126	
47	7,1	◊	33014278	
47	7,1	◊	10121422	
47	7,1	◊	10153065	
47	7,1	◊	10153066	
47	7,1	◊	33015129	
47	7,1	◊	33013979	
47	7,1	◊	10153067	
47	7,1	◊	10153068	
47	7,1	◊	10153069	
47	7,1	◊	10153070	
47	7,1	◊	10153071	
47	7,1	◊	10153072	

Super pack HW knives with support plate. Total thickness 10 mm

62010 Blanks with back toothing
Super pack

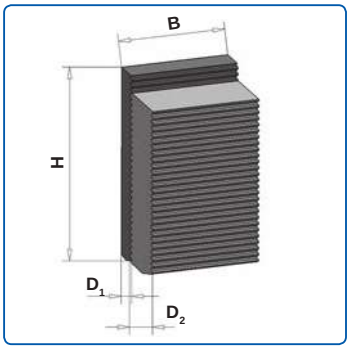

Application: For profile cutter heads with 90° back toothing. Knife thickness 10 mm

For hard wood, laminated wood and panel material
H = 60 mm: PD max. 23 mm

Design: HW knife with back toothing to be applied with support plate
Unprofiled

Packing unit 1 pc
Prices are indicated per piece

Knives

Width mm	Height mm	Thick-ness mm	DT	Order No. Knife	Price [PG 02]
40	60	3,2	◊	10121746	
50	60	3,2	◊	10121745	
60	60	3,2	◊	10116945	
80	60	3,2	◊	33012875	
100	60	3,2	◊	33011973	
120	60	3,2	◊	10141656	
130	60	3,2	◊	10142454	
150	60	3,2	◊	10152834	
170	60	3,2	◊	10152835	
180	60	3,2	◊	10152836	
200	60	3,2	◊	10152837	
210	60	3,2	◊	10152838	
230	60	3,2	◊	10152839	
310	60	3,2	◊	10152841	
330	60	3,2	◊	10152842	

Support plate

Height mm	Thick-ness mm	DT	Order No. Support plate	Price [PG 02]
57	7,1	◊	33012975	
57	7,1	◊	10121747	
57	7,1	◊	33012853	
57	7,1	◊	33012877	
57	7,1	◊	33014224	
57	7,1	◊	10141657	
57	7,1	◊	33012304	
57	7,1	◊	33014225	
57	7,1	◊	33012852	
57	7,1	◊	10152843	
57	7,1	◊	10152845	
57	7,1	◊	10152846	
57	7,1	◊	10152847	
57	7,1	◊	10152849	
57	7,1	◊	10152851	

Super pack HW knives with support plate. Total thickness 10 mm

Allocation: knives - cutter head

D Cutter head mm	Height 40	Height 50	Height 60	Height 70
122	142	162	182	202
135	154	174	194	214
145	164	184	204	224
150	169	189	209	229
165	184	204	224	244
170	189	209	229	249
190	209	229	249	269

62030 HS Blanks with back toothing
Thickness 5 mm

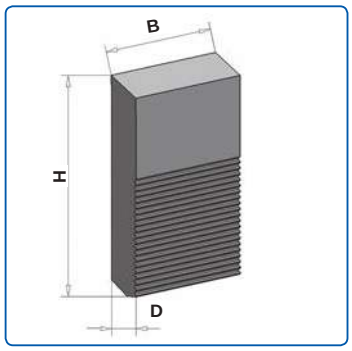

Application: For profile cutter heads with 90° back toothing. Knife thickness 5 mm

For hard wood, laminated wood and panel material
H = 27 mm: for planing
H = 38 mm: for planing

Design: HS knives, unprofiled

Packing unit 1 pc
Prices are indicated per piece

Height 27 mm

Width mm	Height mm	Thick-ness mm	DT	Order No. Knife	Price [PG 02]
20	27	5,0	◊	10153165	
30	27	5,0	◊	10153167	
40	27	5,0	◊	10153168	
50	27	5,0	◊	10153169	
60	27	5,0	◊	10153171	
70	27	5,0	◊	10153172	
80	27	5,0	◊	10153173	
90	27	5,0	◊	10153174	
100	27	5,0	◊	10153175	
110	27	5,0	◊	10153176	
120	27	5,0	◊	10153177	
130	27	5,0	◊	10153178	
150	27	5,0	◊	10153180	
170	27	5,0	◊	10153181	
180	27	5,0	◊	10153182	
190	27	5,0	◊	10153183	
210	27	5,0	◊	10153184	
230	27	5,0	◊	10153185	
240	27	5,0	◊	10153186	
650	27	5,0	◊	10153187	

Height 38 mm

Width mm	Height mm	Thick-ness mm	DT	Order No. Knife	Price [PG 02]
20	38	5,0	◊	10153189	
30	38	5,0	◊	10153190	
40	38	5,0	◊	10153191	
50	38	5,0	◊	10153192	
60	38	5,0	◊	10153193	
70	38	5,0	◊	10153194	
80	38	5,0	◊	10153197	
90	38	5,0	◊	10153198	
100	38	5,0	◊	10153199	
110	38	5,0	◊	10153200	
120	38	5,0	◊	10153201	
130	38	5,0	◊	10153202	
150	38	5,0	◊	10153203	
170	38	5,0	◊	10153204	
180	38	5,0	◊	10153205	
190	38	5,0	◊	10153206	
210	38	5,0	◊	10153207	
230	38	5,0	◊	10153208	
240	38	5,0	◊	10153209	
650	38	5,0	◊	10153210	

62030 HS Blanks with back toothing
Thickness 5 mm

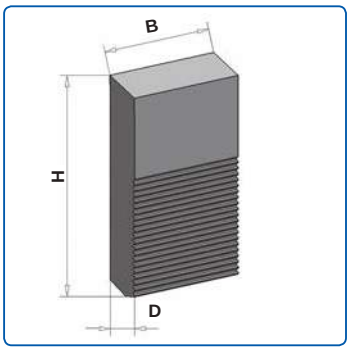

Application: For profile cutter heads with 90° back toothing. Knife thickness 5 mm

For hard wood, laminated wood and panel material
H = 45 mm
H = 50 mm: PD max. 8 mm

Design: HS knives, unprofiled

Packing unit 1 pc
Prices are indicated per piece

Height 45 mm

Width mm	Height mm	Thick-ness mm	DT	Order No. Knife	Price [PG 02]
20	45	5,0	◊	10153221	
30	45	5,0	◊	10153222	
40	45	5,0	◊	10153224	
50	45	5,0	◊	10153225	
60	45	5,0	◊	10153226	
70	45	5,0	◊	10153228	
80	45	5,0	◊	10153229	
90	45	5,0	◊	10153230	
100	45	5,0	◊	10153231	
110	45	5,0	◊	10153232	
120	45	5,0	◊	10153233	
130	45	5,0	◊	10153234	
150	45	5,0	◊	10153235	
170	45	5,0	◊	10153236	
180	45	5,0	◊	10153237	
190	45	5,0	◊	10153238	
210	45	5,0	◊	10153239	
230	45	5,0	◊	10153240	
240	45	5,0	◊	10153241	
650	45	5,0	◊	33015329	

Height 50 mm

Width mm	Height mm	Thick-ness mm	DT	Order No. Knife	Price [PG 02]
20	50	5,0	◊	10153242	
30	50	5,0	◊	10153243	
40	50	5,0	◊	10153244	
50	50	5,0	◊	10153245	
60	50	5,0	◊	10150676	
70	50	5,0	◊	10153251	
80	50	5,0	◊	10153252	
90	50	5,0	◊	10153253	
100	50	5,0	◊	10153255	
110	50	5,0	◊	10153256	
120	50	5,0	◊	10153257	
130	50	5,0	◊	10153258	
150	50	5,0	◊	10153259	
170	50	5,0	◊	10153260	
180	50	5,0	◊	10153261	
190	50	5,0	◊	10153262	
210	50	5,0	◊	10153263	
230	50	5,0	◊	10153264	
240	50	5,0	◊	10153265	
650	50	5,0	◊	10153267	

Allocation: knives - cutter head

D Cutter head mm	Height 40	Height 50	Height 60	Height 70
122	142	162	182	202
135	154	174	194	214
145	164	184	204	224
150	169	189	209	229
165	184	204	224	244
170	189	209	229	249
190	209	229	249	269

62030 HS Blanks with back toothing

Thickness 8 mm, height 40 mm

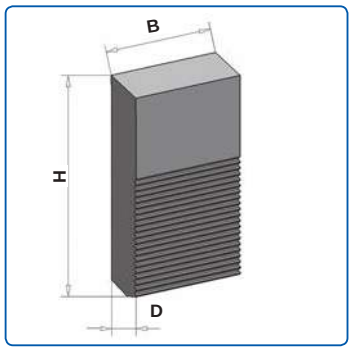

Application: For profile cutter heads with 90° back toothing. Knife thickness 8 mm

For solid wood
H = 40 mm: for planing

Design: Unprofiled blank to be applied in profile cutter heads with 90° back toothing. Please observe the cutter head's circle of rotation when the knives are inserted.

Width mm	Height mm	Thickness mm	Quality	DT	Order No. Knife	Price [PG 02]
40	40	8	HS	◊	10152894	
50	40	8	HS	◊	10152901	
60	40	8	HS	◊	10152902	
70	40	8	HS	◊	10152903	
80	40	8	HS	◊	33015070	
90	40	8	HS	◊	10152904	
100	40	8	HS	◊	10152905	
110	40	8	HS	◊	10152906	
120	40	8	HS	◊	10152907	
130	40	8	HS	◊	10152908	
150	40	8	HS	◊	10152910	
170	40	8	HS	◊	10152911	
180	40	8	HS	◊	10152912	
200	40	8	HS	◊	40015640	
210	40	8	HS	◊	10152913	
230	40	8	HS	◊	10152914	
260	40	8	HS	◊	10152915	
650	40	8	HS	◊	10152916	

Allocation: knives - cutter head

D Cutter head mm	Height 40	Height 50	Height 60	Height 70
122	142	162	182	202
135	154	174	194	214
145	164	184	204	224
150	169	189	209	229
165	184	204	224	244
170	189	209	229	249
190	209	229	249	269

62030 HS Blanks with back toothing

Thickness 8 mm, height 50 mm

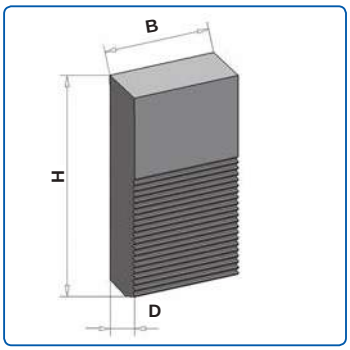

Application: For profile cutter heads with 90° back toothing. Knife thickness 8 mm

For solid wood
H = 50 mm: PD max. 12 mm

Design: Unprofiled blank to be applied in profile cutter heads with 90° back toothing. Please observe the cutter head's circle of rotation when the knives are inserted

Width mm	Height mm	Thickness mm	Quality	DT	Order No. Knife	Price [PG 02]
40	50	8	HS	◊	10152917	
50	50	8	HS	◊	40001590	
60	50	8	HS	◊	40001589	
70	50	8	HS	◊	10144742	
80	50	8	HS	◊	40001588	
90	50	8	HS	◊	10152918	
100	50	8	HS	◊	10152919	
110	50	8	HS	◊	10152920	
120	50	8	HS	◊	10101128	
130	50	8	HS	◊	40005616	
150	50	8	HS	◊	40007038	
170	50	8	HS	◊	10152921	
180	50	8	HS	◊	10152922	
200	50	8	HS	◊	10152923	
210	50	8	HS	◊	10152924	
230	50	8	HS	◊	10134776	
260	50	8	HS	◊	10152925	
650	50	8	HS	◊	10119754	

Allocation: knives - cutter head

D Cutter head mm	Height 40	Height 50	Height 60	Height 70
122	142	162	182	202
135	154	174	194	214
145	164	184	204	224
150	169	189	209	229
165	184	204	224	244
170	189	209	229	249
190	209	229	249	269

62030 HS Blanks with back toothing

Thickness 8 mm, Height 60 mm

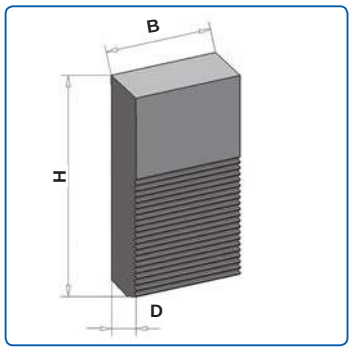

Application: For profile cutter heads with 90° back toothing. Knife thickness 8 mm

For solid wood
H = 60 mm: PD max. 18 mm

Design: Unprofiled blank to be applied in profile cutter heads with 90° back toothing. Please observe the cutter head's circle of rotation when the knives are inserted

Width mm	Height mm	Thickness mm	Quality	DT	Order No. Knife	Price [PG 02]
40	60	8	HS	◊	40001597	
50	60	8	HS	◊	10152996	
60	60	8	HS	◊	10025040	
70	60	8	HS	◊	10153004	
80	60	8	HS	◊	10153005	
90	60	8	HS	◊	10153008	
100	60	8	HS	◊	10153009	
110	60	8	HS	◊	10153010	
120	60	8	HS	◊	10153011	
130	60	8	HS	◊	10153012	
150	60	8	HS	◊	10133570	
170	60	8	HS	◊	10153013	
180	60	8	HS	◊	10105248	
200	60	8	HS	◊	10153014	
210	60	8	HS	◊	10153015	
230	60	8	HS	◊	10105250	
260	60	8	HS	◊	10153016	
650	60	8	HS	◊	10119755	

Allocation: knives - cutter head

D Cutter head mm	Height 40	Height 50	Height 60	Height 70
122	142	162	182	202
135	154	174	194	214
145	164	184	204	224
150	169	189	209	229
165	184	204	224	244
170	189	209	229	249
190	209	229	249	269

62030 HS Blanks with back toothing

Thickness 8 mm, height 70 mm

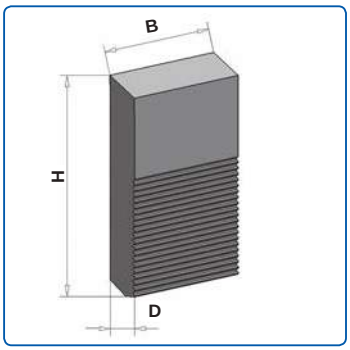

Application: For profile cutter heads with 90° back toothing
Knife thickness 8 mm

For solid wood
H = 70 mm: PD max. 30 mm

Design: Unprofiled blank to be applied in profile cutter heads with 90° back toothing. Please observe the cutter head's circle of rotation when the knives are inserted

Width mm	Height mm	Thickness mm	Quality	DT	Order No. Knife	Price [PG 02]
40	70	8	HS	◊	10153017	
50	70	8	HS	◊	40001602	
60	70	8	HS	◊	10101674	
70	70	8	HS	◊	10153020	
80	70	8	HS	◊	10153021	
90	70	8	HS	◊	10153022	
100	70	8	HS	◊	10153023	
110	70	8	HS	◊	10153024	
120	70	8	HS	◊	10153025	
130	70	8	HS	◊	10153026	
150	70	8	HS	◊	10153027	
170	70	8	HS	◊	10145509	
180	70	8	HS	◊	10153028	
200	70	8	HS	◊	10153030	
210	70	8	HS	◊	10153031	
230	70	8	HS	◊	10153032	
260	70	8	HS	◊	10153033	
650	70	8	HS	◊	10145508	

Allocation: knives - cutter head

D Cutter head mm	Height 40	Height 50	Height 60	Height 70
122	142	162	182	202
135	154	174	194	214
145	164	184	204	224
150	169	189	209	229
165	184	204	224	244
170	189	209	229	249
190	209	229	249	269

Notes

Spannsysteme

Inhalt

Spannsysteme

Produkte	Seite
HSK - Spannsysteme	364-375
SK - Spannsysteme	376-381
Präzisionsspannzangen	382-384
Kreissägeblatt-Aufnahmen	385
Buchsen	386-391

82000 HSK 63 F Bohrfutter

Nach DIN 69893, Spannbereich 1-13 mm und 3-16 mm

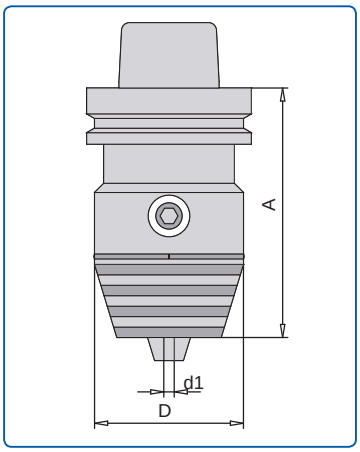

Anwendung:	Spannen von Bohrern und leichten Fräswerkzeugen Für Rechts- und Linkslauf geeignet
Maschine:	CNC Oberfräse oder BAZ
Ausführung:	Stufenlos verstellbarer Spannbereich n (max) = 20.000 min-1

Schaft	A mm	D mm	d1 mm	LZ	Bestell-Nr.	Preis [PG 02]
HSK 63 F	90	50	1-13	◊	40015551	
HSK 63 F	102	50	2-16	◊	40003140	

Lieferung mit Schraubendreher Querform SW 6

82000 HSK 63 F Spannzangenfutter Standard

Nach DIN 69893, für Spannzangen bis 25 mm, schlanke Bauform

Anwendung:	**Standard**: Spannen von Schaftwerkzeugen mit Zylinderschaft **Mini**: Einsatz bei Kunststoff- oder ALU-Bearbeitung, um Störkonturen zu vermeiden Für Rechts- und Linkslauf verwendbar
Maschine:	CNC Oberfräse oder BAZ
Ausführung:	Mit Ausdrehung für Datenchip Spannmutter kugelgelagert n (max) = 24.000 min-1

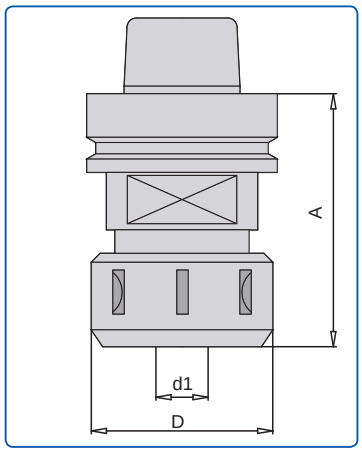

Standard

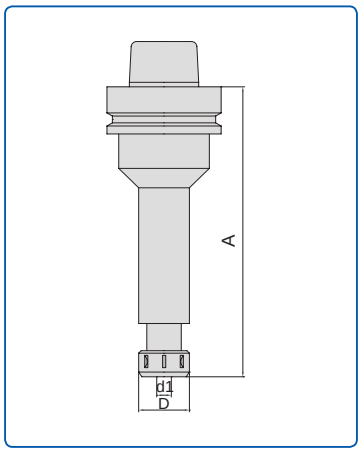

Mini

Standard

Typ	A mm	D/Gewinde mm	d1 mm	für Spannzangen-Nr.	LZ	Bestell-Nr.	Preis [PG 02]
TOP HSK 63 F	76	60/M48	3-25,4	462 E (bis 25 mm)		10032786	
HSK 63 F	115	60/M48	3-25,4	462 E (bis 25 mm)		10035785	

Mini

Typ	A mm	D/Gewinde mm	d1 mm	für Spannzangen-Nr.	LZ	Bestell-Nr.	Preis [PG 02]
HSK 63 F	100	22/M19x1	1-12	426 E (bis12mm)	◊	10164023	
HSK 63 F	130	22/M19x1	1-12	426 E (bis12mm)	◊	10164024	
HSK 63 F	160	22/M19x1	1-12	426 E (bis12mm)	◊	10164025	

Zubehör

Bezeichnung	D mm	für Spannzangen-Nr.	Bestell-Nr.	Preis [PG 02]
Blindstopfen	12	HSK63 F	10206328	

Lieferung ohne Hakenschlüssel und Spannzange
Bitte Mindesteinspannlänge auf den Schäften der Werkzeuge beachten

Hakenschlüssel siehe Seite 384 und Kapitel Zubehör
Spannzangen siehe Seite 382-383

HP Spannzangenfutter
HSK 63 F

Ihr neues Spannsystem

- Das HP Spannsystem **eliminiert alle Nachteile herkömmlicher Spannsysteme** und bietet gleichzeitig Vorteile im Bereich Drehzahl und Präzision, wie Sie es nur vom Schrumpfen kennen

Ihr Preis

- Höchst **attraktive Preisbasis** im Vergleich zu anderen Spannsystemen
- **Keine Zusatzkosten** durch Verwendung von Standard-Spannzangen

Technische Daten:

- Optimaler Rundlauf und Haltekraft bei 180 Nm

Ihre Vorteile

Präzision:

- Bis 0,008 mm Rundlauf erreichbar
- **50 % verbesserte Rundlaufgenauigkeit**
- Schlanke Bauform für geringe Störkontur: Kleiner Außendurchmesser von nur 53 mm

Power:

- 40% höhere Spannkräfte möglich
- Für hohe **Drehzahlen bis 24.000 U/min** geeignet

Flexibilität:

- Für **Rechts- und Linkslauf** einsetzbar
- Durchmesserunabhängiges Werkzeugspannen
- Standard-Spannzangen E 462 verwendbar
- Auf CNC-Oberfräsen oder BAZ einsetzbar

Sicherheit:

- **Kein Öffnen der Spannmutter** beim Abbremsen schwerer Werkzeuge
- Innenliegende Einzugs- und Spannmutter mit Verdrehsicherung

Ausführung:

- Gehärteter Stahl-Grundkörper
- Polierte Oberflächen
- Verwendung von herkömmlichen und hochpräzisen E 462 Spannzangen bis Schaftdurchmesser 25 mm möglich

Sicherheits-Tipp:

- Nur zylindrische Schäfte verwenden
- Nur Werkzeuge mit Schafttoleranz „h7“ oder besser verwenden
- Nur Spannzangen mit Toleranz 15 µm oder besser verwenden

Werkzeugaufnahme

+

Spannzange

+

Spannmutter

HP Spannzangenfutter
HP Spannsystem

Werkzeug-aufnahme	A mm	D mm	Nm empfohlen	für Spannzangen-Nr.	LZ	Bestell-Nr.	Preis [PG 02]
TOP **HSK63 F**	76	53	180	**E 462**		10185756	
HSK63 A	85	53	180	**E 462**	◊	10193211	
HSK63 E	76	53	180	**E 462**	◊	10198742	
HSK40 E	60	30	50	**ER 16**	◊	10204396	
SK30*	80	50	180	**ER 32**		10200307	

Spannmutter
Ersatzteil

D/Gewinde mm1	Bestell-Nr.	Preis [PG 02]
M 46 x 1,5	10185759	
M 25 x 1,0	10205500	
M 44 x 1,5	10205501	

Spannbereich: d1 = 3 - 25,4 mm

Lieferung ohne Hakenschlüssel und Spannzange; * wird mit Anzugbolzen „Biesse“ 10006134 geliefert
Bitte Mindesteinspannlänge auf dem Werkzeugschaft beachten

Zubehör
HP Spannsystem

Masterclamp für HSK 63
Zubehör HP Spannsystem

Schnelles und sicheres Montieren & Spannen

Das Masterclamp ist die perfekte Vorrichtung zur schnellen und sicheren Montage von Werkzeugen

Zusammen mit den Hakenschlüsseln oder alternativ mit den neuen Drehmoment-Hakenschlüsseln, ist das Masterclamp die perfekte Montagegehilfe für das HP Spannzangenfutter

für Spannfutter	LZ	Bestell-Nr.	Preis [PG 02]
HSK 40 (C4)	◊	10163753	
HSK 50 (SK 30)	◊	10163754	
TOP HSK 63 (SK 40)	◊	10163755	

Standard-Hakenschlüssel
Zubehör HP Spannsystem

Die bewährten Hakenschlüssel zum Spannen von Werkzeugen im HP Spannzangenfutter sowie für Spannzangenfutter mit Kugellager

Hakenschlüssel-Typ	für D mm	Spann-zange	Bestell-Nr.	Preis [PG 02]
TOP Hakenschlüssel	52/55	E 462	10180589	
Kombi-Hakenschlüssel	53 & 58/62	E 462	10203800	
Hakenschlüssel	50	ER 32	10006110	
Hakenschlüssel	30/32	ER 16	10205522	

Anwender-Tipp:

Die Kombi-Hakenschlüssel (Standard und Drehmoment) passen für das HP- sowie Standard-Spannzangenfutter mit Kugellagermutter. Sie sparen einen Hakenschlüssel

Drehmoment-Hakenschlüssel
Zubehör HP Spannsystem

Die Drehmoment-Hakenschlüssel zum sicheren Spannen von Werkzeugen im HP Spannzangenfutter sowie für Spannzangenfutter mit Kugellager

+

Drehmomentschlüssel

Drehmoment-schlüssel	Aufnahme mm	Nm	Bestell-Nr.	Preis [PG 02]
TOP Typ 1	14 x 18	60 - 320	10203818	

Drehmoment-schlüssel	Aufnahme mm	Nm	Bestell-Nr.	Preis [PG 02]
Typ 2	9 x 12	20 -120	10205397	

Hakenschlüssel-Element

Hakenschlüssel-Element für Typ 1	für D mm	Spann-zange	Bestell-Nr.	Preis [PG 02]
Kombi-Einsteck-Hakenschlüssel	53 & 58/62	E 462	10203820	
Einsteck-Hakenschlüssel	50	ER 32	10203822	

Hakenschlüssel-Element für Typ 2	für D mm	Spann-zange	Bestell-Nr.	Preis [PG 02]
Einsteck-Spannschlüssel	22	ER 16 Mini	10205399	

82000 HSK 63 F Weldonaufnahme
Nach DIN 69893

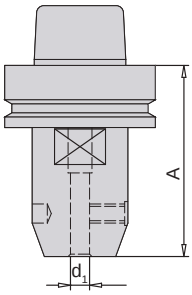

Anwendung: Aufnahme von Schaftwerkzeugen mit Spannfläche nach DIN 1835
Für Rechts- und Linkslauf geeignet

Maschine: CNC Oberfräse oder BAZ

Ausführung: Schlanke Bauform für einen optimalen Späneabfluss zur Absaugung

n (max) = 24.000 min-1

Schaft	d1 mm	A mm	LZ	Bestell-Nr.	Preis [PG 02]
HSK 63 F	6	80	○	10013534	
HSK 63 F	8	80	○	10013533	
HSK 63 F	10	80	◊	10013532	
HSK 63 F	12	80	◊	10014499	
HSK 63 F	14	80	◊	10014501	
HSK 63 F	16	80	◊	10013531	
HSK 63 F	20	80	◊	10013530	

Spannfläche am Werkzeugschaft

gültig für o. g. Weldonaufnahmen nach DIN 1835 Form B

d1 mm h6	b1 mm +0,05 0	e1 mm 0 -1	h1 mm h13	l1 mm +2 0
6	4,2	18	4,8	36
8	5,5	18	6,6	36
10	7	20	8,4	40
12	8	22,5	10,4	45
14	10	24	14,2	48
16	10	24	14,2	48
20	11	25	18,2	50

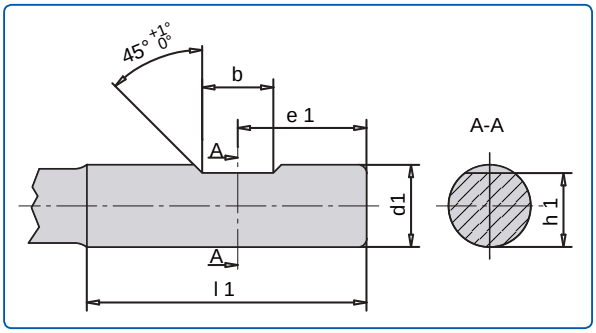

82000 HSK Plus Aufnahme
für höchste Beanspruchung

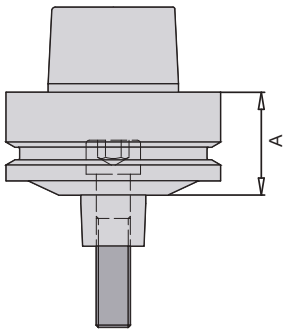

HSK 63 F

Ihre Vorteile auf einen Blick:

- Für n (max) bis 40.000 min-1
- Optimale Wuchtgüte
- Für beste Schnittergebnisse

Anwendung: Aufnehmen von HSK Plus Fräsern

Maschine: CNC Oberfräse oder BAZ

Ausführung: Mit dem Fräswerkzeug verschraubt erzielt man eine sehr hohe Rundlaufgenauigkeit von 0,003 - 0,01 mm

n (max) = 40.000 min-1

Schaft	A mm	Bestell-Nr.	Preis [PG 02]
HSK 63 F	30,2	10033898	
HSK 63 F	50,2	10033900	
HSK 63 F	80,2	10033902	

81000 HSK 63 F Fräsdorn
Nach DIN 69893

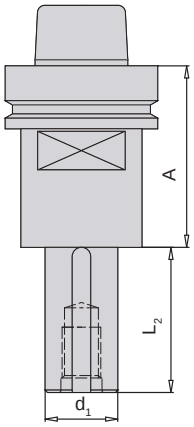

Anwendung: Aufnahme von Bohrungswerkzeugen.

Die zulässige Drehzahl der Bohrungswerkzeuge ist einzuhalten

Maschine: CNC Oberfräse oder BAZ

Ausführung: Ausdrehung für Datenchip. Sehr starke Spannkraft und optimale Sicherheit durch die M16 Anzugsschraube mit stabiler Deckscheibe. Verdrehsicherung durch Passfedern

Schaft	d1 mm	L2 mm	A mm	DKN mm	Gewicht kg	Bestell-Nr.	Preis [PG 02]
HSK 63 F	30	40	75	8x2	1,55	10013522	
HSK 63 F	30	50	75	8x2	1,60	10013526	
HSK 63 F	30	60	75	8x2	1,65	10013527	
HSK 63 F	30	80	75	8x2	1,75	10013529	
HSK 63 F	30	100	75	8x2	1,90	10014498	

Im Lieferumfang sind die Anzugsschraube und die Deckscheibe enthalten

82000 Hydro-Dehnspannfutter
HSK 63 F nach DIN 69893

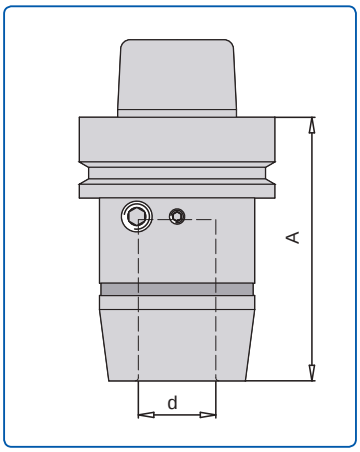

Anwendung: Hochgenaues Spannen von Schaftwerkzeugen mit Zylinderschaft 25 mm
Für Rechts- und Linkslauf verwendbar

Maschine: CNC Oberfräse oder BAZ

Ausführung: Die Werkzeugschäfte benötigen keine Verriegelungsschraube

n (max) = 25.000 min-1

Schaft	A mm	d mm	LZ	Bestell-Nr.	Preis [PG 02]
HSK 63 F	85	25	◊	40006600	

82000 HSK 63 F Schrumpfspannfutter

HSK 63 F nach DIN 69893

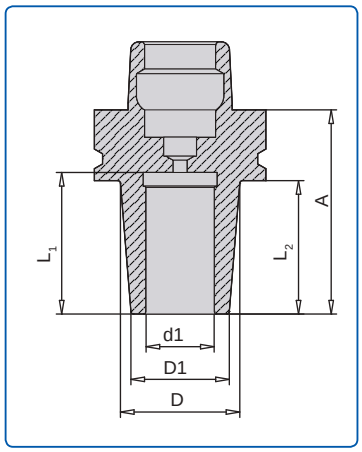

Anwendung: Hochgenaues Spannen (Warmschrumpfen) von Schaftwerkzeugen mit Zylinderschaft

Für Rechts- und Linkslauf verwendbar
Rundlaufgenauigkeit: 0,003 - 0,01 mm

Maschine: CNC Oberfräse oder BAZ

	Schaft	d1 mm	A mm	L1 mm	L2 mm	D mm	D1 mm	LZ	Bestell-Nr.	Preis [PG 02]
TOP	HSK 63 F	6	75	36	49	27	20		10190178	
TOP	HSK 63 F	8	75	36	49	27	20		10190179	
	HSK 63 F	10	75	36	49	32	24		10156541	
TOP	HSK 63 F	12	75	41	49	32	24		10156544	
	HSK 63 F	12,7	75	41	49	32	24		10203119	
	HSK 63 F	14	75	41	49	34	27		10156545	
TOP	HSK 63 F	16	75	44	49	34	27		10156547	
	HSK 63 F	18	75	44	49	41	33		10156548	
	HSK 63 F	20	75	46	49	41	33		10156549	
TOP	HSK 63 F	25	75	52	49	44	36		10156550	

	Schaft	d1 mm	A mm	L1 mm	L2 mm	D mm	D1 mm	LZ	Bestell-Nr.	Preis [PG 02]
	HSK 63 F	4	90	20	64	20	15	◊	10105902	
	HSK 63 F	5	90	25	64	20	15	◊	10106321	
TOP	HSK 63 F	6	90	36	64	27	20	◊	10103390	
TOP	HSK 63 F	8	90	36	64	27	20	◊	10103392	
	HSK 63 F	10	90	36	64	32	24	◊	10103393	
TOP	HSK 63 F	12	90	41	64	32	24	◊	10103394	
TOP	HSK 63 F	16	90	44	64	34	27	◊	10103395	
	HSK 63 F	20	90	46	64	42	33	◊	10104820	
TOP	HSK 63 F	25	90	52	64	45	36	◊	10190181	

	Schaft	d1 mm	A mm	L1 mm	L2 mm	D mm	D1 mm	LZ	Bestell-Nr.	Preis [PG 02]
TOP	HSK 63 F	6	120	36	94	27	20	◊	10116265	
	HSK 63 F	8	120	36	94	27	20	◊	10116266	
	HSK 63 F	10	120	36	94	32	24	◊	10103398	
	HSK 63 F	12	120	41	94	32	24	◊	10103399	
	HSK 63 F	16	120	44	94	34	27	◊	10103400	
	HSK 63 F	20	120	46	94	42	33	◊	10190182	
	HSK 63 F	25	120	52	94	45	36	◊	10190185	

Passendes Schrumpfgerät auf Anfrage lieferbar

81000 HSK 63 F Kreissägeblatt-Aufnahme

Nach DIN 69893

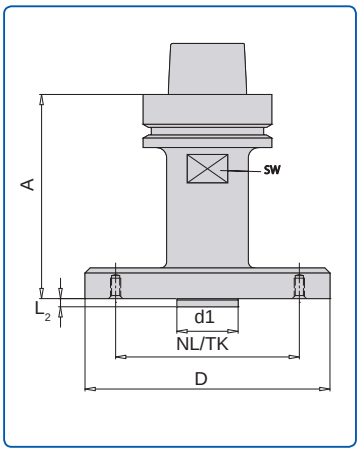

Anwendung:	Aufnehmen eines Sägeblatts Das Sägeblatt benötigt gesenkte Mitnehmerbohrungen Für Rechts- und Linkslauf
Maschine:	CNC Oberfräse oder BAZ
Ausführung:	Mit Ausdrehung für Datenchip Max. Drehzahl ist abhängig von dem verwendeten Werkzeug

Schaft	A mm	D mm	d1 mm	L2 mm	NL/TK	SW mm	Bestell-Nr.	Preis [PG 02]
HSK 63 F	80	50	30	1,5	3/M6/40	41	10032284	
HSK 63 F	80	60	30	2,0	4/M5/48	41	10156292	
HSK 63 F	80	90	30	2,5	6/M8/75	41	10023989	
HSK 63 F	80	120	30	2,5	6/M8/100	41	10034124	
HSK 63 F	60	160	30	2,0	6/M8/140	46	10029752	

Andere Abmessungen oder Teilkreise auf Anfrage lieferbar

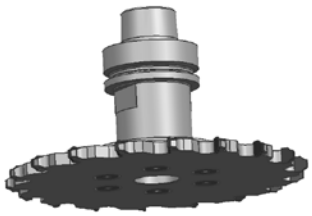

Abb.: Rechtslauf

Passende Kreissägeblätter

D mm	B mm	b mm	d mm	Z	Bestell-Nr.	Preis [PG 01]
Für D = 50						
120	2,6	1,6	30	12F	0039.123.30	
120	2,6	1,6	30	30W	0039.123.31	
Für D = 60						
150	2,6	1,6	30	12F	0039.153.30	
150	3,2	2,2	30	24W	0039.153.31	
150	3,2	2,2	30	36W	0039.153.32	
150	3,2	2,2	30	48W	0039.153.33	
Für D = 90						
250	3,5	2,2	30	24F	0039.253.30	
250	3,2	2,2	30	30W	0039.253.31	
250	3,2	2,2	30	48W	0039.253.32	
250	3,2	2,2	30	60W	0039.253.33	
250	3,2	2,2	30	80W	0039.253.34	
Für D = 120						
300	3,4	2,2	30	28F	0039.303.30	
300	3,2	2,2	30	36W	0039.303.31	
300	3,2	2,2	30	54W	0039.303.32	
300	3,2	2,2	30	72W	0039.303.33	
Für D = 160						
350	3,6	2,4	30	30F	0039.353.30	
350	3,5	2,4	30	54W	0039.353.31	
350	3,5	2,4	30	72W	0039.353.32	
350	3,5	2,4	30	84W	0039.353.33	

81000 HSK 63 F Kreissägeblatt-Aufnahme Nr. 39498
für Homag

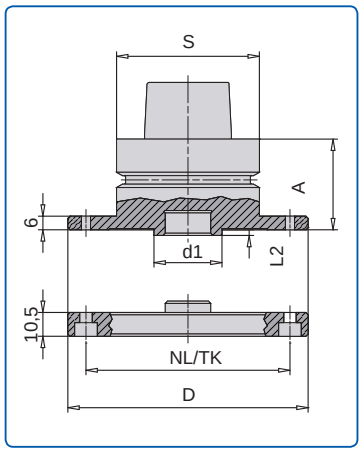

Anwendung: Direkte Aufnahme von Sägeblättern oder Nutfräsern mit gesenkten NL; Nabendicken von 2,5 - 10 mm

Nabendicke Werkzeug:
Für die Spannung mit Spanndeckel: 2-5 mm
Für die Spannung ohne Spanndeckel: ab 2 mm

Maschine: CNC Oberfräse oder BAZ

Ausführung: Je nach Aufspannung benötigt das Sägeblatt Durchgangslöcher oder Senklöcher

Max. Drehzahl ist abhängig von dem verwendeten Werkzeug

Inklusive Schrauben
Ohne Spanndeckel: 8 Senkschrauben
Mit Spanndeckel: 8 Zylinderkopfschrauben

Schaft	D mm	d1 mm	L2 mm	A mm	NL/TK	Ausführung	LZ	Bestell-Nr.	Preis [PG 02]
HSK 63 F	106	30	2,5	40	8/M5/90	ohne Spanndeckel	◊	10149518	
HSK 63 F	106	30	2,5	40	8/M5/90	mit Spanndeckel	◊	10157330	

Passende Kreissägeblätter - Nebenlöcher ohne Ansenkung

D mm	B mm	b mm	d mm	NL mm	Z	Bestell-Nr.	Preis [PG 02]
250	3,2	2,2	30	8/5,5/90	48W	0039.252.30	
250	3,2	2,2	30	8/5,5/90	60W	0039.252.32	
250	3,2	2,2	30	8/5,5/90	80W	0039.252.34	
280	3,2	2,2	30	8/5,5/90	48W	0039.282.30	
280	3,2	2,2	30	8/5,5/90	60W	0039.282.31	
280	3,2	2,2	30	8/5,5/90.	80W	0039.282.32	
300	3,2	2,2	30	8/5,5/90	36W	0039.302.30	
300	3,2	2,2	30	8/5,5/90	54W	0039.302.31	
300	3,2	2,2	30	8/5,5/90	75W	0039.302.32	
350	3,5	2,4	30	8/5,5/90	54W	0039.352.30	
350	3,5	2,4	30	8/5,5/90	72W	0039.352.31	
350	3,5	2,4	30	8/5,5/90.	84FT	0039.352.33	
350	3,5	2,4	30	8/5,5/90	84W	0039.352.32	

Bitte bei Bestellung mit angeben, ob eine Verwendung mit oder ohne Spanndeckel erfolgt; bei einer Verwendung ohne Spanndeckel müssen die Nebenlöcher angesenkt werden

Sägeblattaufnahme HSK 63 F

Anwendung: Zur Aufnahme von Sägeblättern oder Nutfräsern
Für Rechts- und Linkslauf; die Werkzeugbefestigung kann flächenbündig über 4 Senklöcher (Nabendicke = 4 mm) oder mit Gegenflansch über eine zentrale Spannmutter erfolgen

In der Regel Werkzeugspannung mit Spanndeckel:
Spannblattstärke: 1,5 - 3,5 mm; Bo 30 mm; 2 NL; d10; TK 60 mm; Verdrehsicherung über Sicherungsstifte

Optional Werkzeug ohne Spanndeckel:
Spannblattstärke: 4,0 - 10 mm; Bo 30 mm; 4 Senklöcher; d 8,5; TK 75 mm; Senkschraube nach DIN 7991 M8x16

Maschine: CNC Oberfräse oder BAZ

Ausführung: Stahl-Grundkörper; Spanndeckel mit Verdrehsicherung
max. Drehzahl ist abhängig von dem verwendeten Werkzeug

Schaft	D mm	d1 mm	L2 mm	A mm	NL/TK	Ausführung	Bestell-Nr.	Preis [PG 02]
HSK 63 F	90	30	3,5	50	4/M8/75 2/8/60	mit Spanndeckel	10179926	
HSK 63 F	90	30	3,5	80	4/M8/75 2/8/60	mit Spanndeckel	10178467	

Bei dauerhafter Verwendung ohne Spanndeckel bitte Sägeblattaufnahme auf Seite 372 verwenden

81000 I Fräsdornaufnahme Powerlock

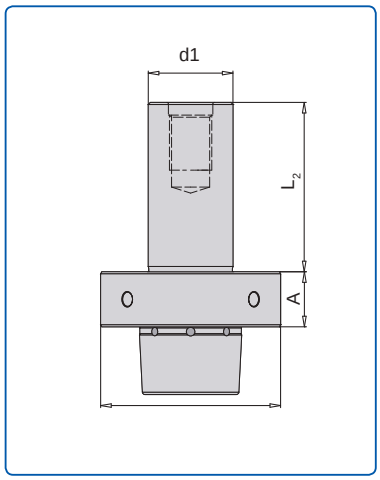

Anwendung: Aufnahme von Bohrungswerkzeugen
Die zulässige Drehzahl der Bohrungswerkzeuge ist einzuhalten

Maschine: Kehlautomaten mit HSK 85-Schnittstelle z.B. Weinig

Ausführung: Verdrehsicherung durch Verstiften oder Verschrauben

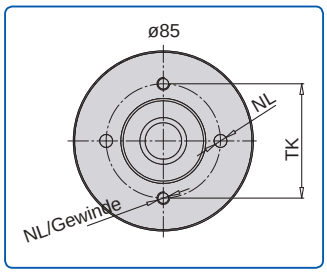

Schaft	d1 mm	L2 mm	A mm	TK mm	NL	NL / Gewinde	LZ	Bestell-Nr.	Preis [PG 02]
HSK 85	30	40	26	48	2x6,0	2xM6	◊	10156237	
HSK 85	30	60	26	48	2x6,0	2xM6	◊	10156238	
HSK 85	30	80	26	48	2x6,0	2xM6	◊	10156239	
HSK 85	30	130	26	48	2x6,0	2xM6	◊	10156240	
HSK 85	30	170	26	48	2x6,0	2xM6	◊	10156241	
HSK 85	40	40	26	54	2x6,0	2xM6	◊	10156242	
HSK 85	40	60	26	54	2x6,0	2xM6	◊	10156243	
HSK 85	40	80	26	54	2x6,0	2xM6	◊	10156245	
HSK 85	40	100	26	54	2x6,0	2xM6	◊	10156247	
HSK 85	40	130	26	54	2x6,0	2xM6	◊	10156248	
HSK 85	40	170	26	54	2x6,0	2xM6	◊	10156249	
HSK 85	40	180	26	54	2x6,0	2xM6	◊	10156250	
HSK 85	40	240	26	54	2x6,0	2xM6	◊	10156251	
HSK 85	50	40	26	64	2x6,0	2xM6	◊	10156252	
HSK 85	50	60	26	64	2x6,0	2xM6	◊	10156253	
HSK 85	50	80	26	64	2x6,0	2xM6	◊	10156254	
HSK 85	50	100	26	64	2x6,0	2xM6	◊	10156255	
HSK 85	50	130	26	64	2x6,0	2xM6	◊	10156256	
HSK 85	50	150	26	64	2x6,0	2xM6	◊	10156257	
HSK 85	50	170	26	64	2x6,0	2xM6	◊	10156258	
HSK 85	50	180	26	64	2x6,0	2xM6	◊	10156259	
HSK 85	50	240	26	64	2x6,0	2xM6	◊	10156260	

2-teilige Fräseranzugsschraube im Lieferumfang enthalten

Empfohlen bei Motoren mit einer Leistung ab 15 KW; dies ist mit dem Maschninenhersteller abzustimmen

Folgende Ausführungen sind auf Anfrage lieferbar:
- als HSK 85 mit Mitnehmernuten
- mit Passfedern für schwere Fräswerkzeuge
- mit Hydrospannung für beste Rundlauftoleranz

82000 SK Spannzangenfutter
Nach DIN 69871

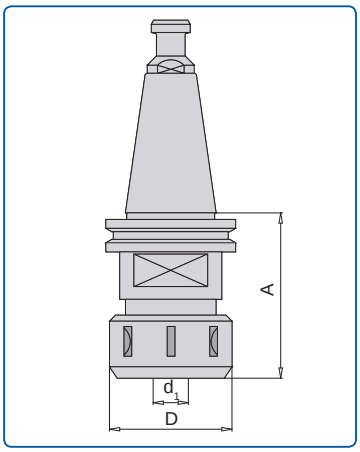

Anwendung: Spannen von Schaftwerkzeugen mit Zylinderschaft
Für Rechts- und Linkslauf geeignet

Maschine: CNC Oberfräse oder BAZ

Ausführung: Anzugsbolzen, je nach Maschinenfabrikat
Spannmutter kugelgelagert

n (max) = 24.000 min-1

Schaft	A mm	D/Gewinde mm	d1 mm	für Spannzangen-Nr.	LZ	Bestell-Nr.	Preis [PG 02]
SK 30	56	63/M50	6-26	472 E (bis 25 mm)	◊	10014242	
SK 30	70	60/M48	3-25,4	462 E (bis 25 mm)	◊	10014643	
SK 40	81	60/M48	3-25,4	462 E (bis 25 mm)	◊	10014645	
SK 40	79	60/M48	3-25,4	462 E (bis 25 mm)	◊	10014517	

Lieferung ohne Hakenschlüssel und Spannzange
Bei SK 40 wird der Anzugsbolzen (DIN 69872) mitgeliefert
Bei SK 30 bitte den Kopfbolzen siehe Seite 384 mitangeben

Bitte Mindesteinspannlänge auf den Schäften der Werkzeuge beachten

Hakenschlüssel siehe Seite 384 und Kapitel Zubehör
Spannzangen siehe Seite 382-383

82000 SK 30 Spannzangenfutter
mit Zahnkranz für Morbidelli / SCM

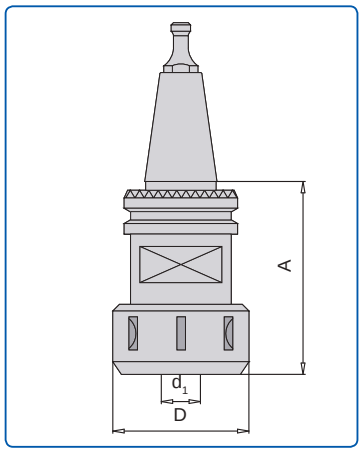

Anwendung:	Spannen von Schaftwerkzeugen mit Zylinderschaft Für Rechts- und Linkslauf geeignet
Maschine:	CNC Oberfräse Morbidelli / SCM
Ausführung:	Spannmutter kugelgelagert
	n (max) = 24.000 min-1

Schaft	A mm	D/Gewinde mm	d1 mm	für Spannzangen-Nr.	LZ	Bestell-Nr.	Preis [PG 02]
SK 30	55	50/M40	3-20,0	470 E (bis 20 mm)	◊	10002396	
SK 30	70	60/M48	3-25,4	462 E (bis 25 mm)	◊	10002397	

Lieferung ohne Hakenschlüssel und Spannzange
Lieferung mit Anzugsbolzen 10006131 für SCM / Morbidelli

Bitte Mindesteinspannlänge auf den Schäften der Werkzeuge beachten

Hakenschlüssel siehe Seite 384 und Kapitel Zubehör
Spannzangen siehe Seite 382-383

81000 SK 40 Fräsdorn
Nach DIN 69871

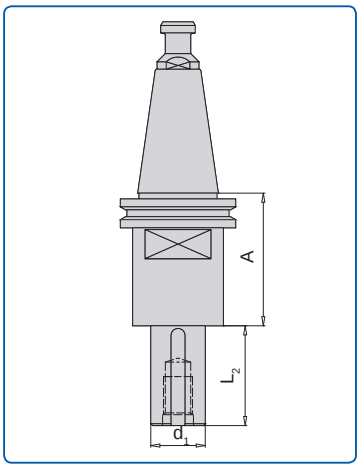

Anwendung: Aufnahme von Bohrungswerkzeugen
Die zulässige Drehzahl der Bohrungswerkzeuge ist einzuhalten

Maschine: CNC Oberfräse oder BAZ

Ausführung: Sehr hohe Spannkraft und optimale Sicherheit durch die M16 Anzugsschraube mit stabiler Deckscheibe
Verdrehsicherung durch Passfedern

Schaft	d1 mm	L2 mm	A mm	DKN mm	Gewicht kg	LZ	Bestell-Nr.	Preis [PG 02]
SK 40	30	60	43	8x2	1,5	◊	10014228	
SK 40	30	80	43	8x2	1,6	◊	10014230	
SK 40	30	100	43	8x2	1,75	◊	10014229	

Im Lieferumfang sind die Anzugsschrauben, Anzugsbolzen (DIN 69872) und die Deckscheibe enthalten

82000 SK 40 Weldonaufnahme
Nach DIN 69871

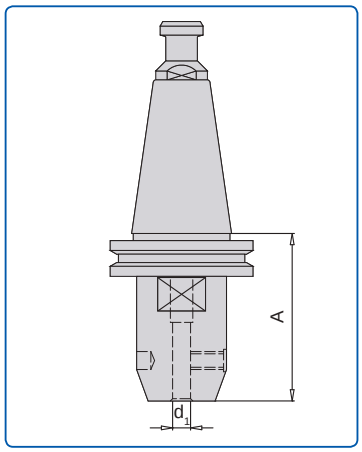

Anwendung: Aufnehmen von Schaftwerkzeugen mit Spannfläche nach DIN 1835
Für Rechts- und Linkslauf geeignet

Maschine: CNC Oberfräse oder BAZ

Ausführung: Schlanke Bauform für einen optimalen Späneabfluss zur Absaugung. Inkl. Anzugsbolzen

n (max) = 24.000 min-1

Schaft	d1 mm	A mm	LZ	Bestell-Nr.	Preis [PG 02]
SK 40	16	63	◊	10013536	
SK 40	20	63	◊	10013538	

Die SK40-Aufnahmen werden mit Anzugsbolzen (DIN 69872) ausgeliefert

Spannfläche am Werkzeugschaft

gültig für o. g. Weldonaufnahmen nach DIN 1835 Form B

d1 mm h6	b1 mm +0,05 0	e1 mm 0 -1	h1 mm h13	l1 mm +2 0
6	4,2	18,0	4,8	36
8	5,5	18,0	6,6	36
10	7,0	20,0	8,4	40
12	8,0	22,5	10,4	45
14	10,0	24,0	14,2	48
16	10,0	24,0	14,2	48
20	11,0	25,0	18,2	50

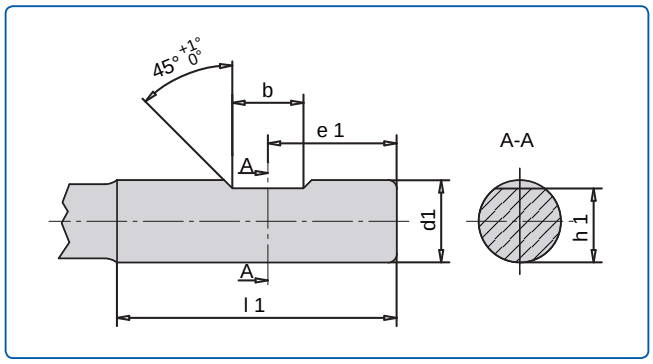

82000 SK Plus Aufnahme
für höchste Beanspruchung

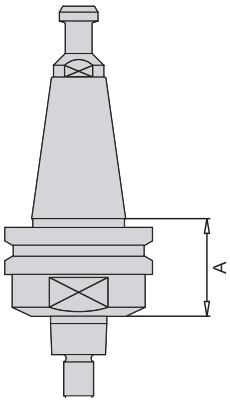

SK 30

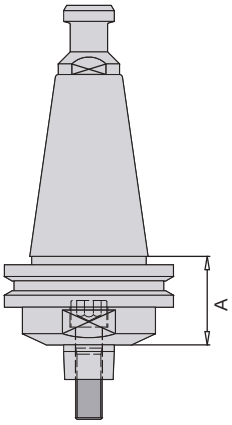

SK 40

Ihre Vorteile auf einen Blick:

- Optimale Wuchtgüte
- Für beste Schnittergebnisse

Anwendung:	Aufnehmen von SK Plus Fräsern
Maschine:	CNC Oberfräse oder BAZ
Ausführung:	Mit dem Fräswerkzeug verschraubt erzielt man eine sehr hohe Rundlaufgenauigkeit von 0,003 - 0,01 mm SK 30 n (max) 24.000 min-1 SK 40 n (max) 18.000 min-1 Fräser re = Rechtslauf Fräser li = Linkslauf

Schaft	A mm	LZ	Bestell-Nr.	Preis [PG 02]
SK 30 li	33,3	◊	10034362	
SK 30 re	33,3	◊	10034013	
SK 40 re	33,3	◊	10034015	

Bei SK 40 wird der Anzugsbolzen (DIN 69872) mitgeliefert
Bei SK 30 bitte den Kopfbolzen siehe Seite 384 mitangeben

Zubehör
Montagebock für alle Standardaufnahmen

Anwendung: Sichere Spannung des Werkzeugsatzes während der Montage und Demontage sowie beim Schneidenwechsel bei Wendeplatten-Werkzeugen

Ausführung: Einfaches Spannen per Spannhebel

Schaft	LZ	Bestell-Nr.	Preis [PG 02]
SK 40	◊	10002577	
HSK 63 F	◊	10002580	
HSK 85 (Powerlock)	◊	40015764	

Montagevorrichtungen für andere Schnittstellen auf Anfrage

Zubehör
Masterclamp

Anwendung: Schnelles und sicheres Montieren und Spannen von Werkzeugen in Spannfuttern, auf Fräsdornen und auf Sägeblattflanschen

für Spannfutter	LZ	Bestell-Nr.	Preis [PG 02]
HSK 25	◊	10163751	
HSK 32 (C3)	◊	10163752	
HSK 40 (C4)	◊	10163753	
HSK 50 (SK 30)	◊	10163754	
TOP HSK 63 (SK 40)	◊	10163755	
HSK 80	◊	10163756	
SK 50	◊	10163757	
HSK 100	◊	10163758	

82000 I Präzisionsspannzangen

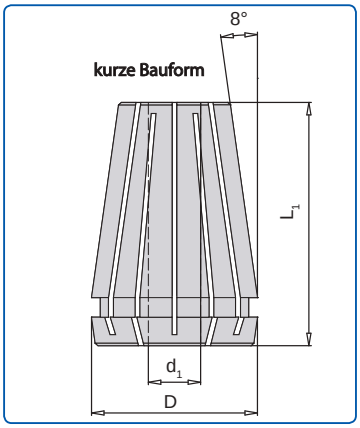

Anwendung: Für Spannzangenfutter

Ausführung:

Spannbereich:		Toleranz:	geschlitzt:
ER 16	3 - 10 mm	- 0,5 mm	16-fach
ER 16	11 - 12 mm	0,0 mm	16-fach
ER 25	3 - 16 mm	- 0,5 mm	16-fach
ER 32	3 - 20 mm	- 0,5 mm	16-fach
ER 40	3 - 26 mm	- 0,5 mm	16-fach

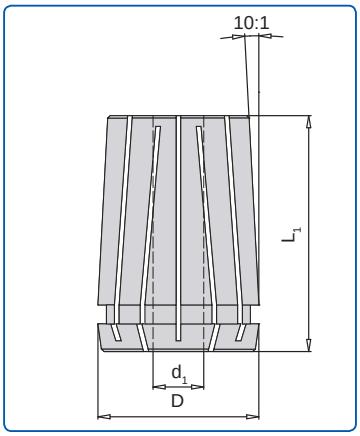

Anwendung: Für Spannzangenfutter

Ausführung:

Spannbereich:		Toleranz:	geschlitzt:
415 E	4,5 - 16 mm	- 0,5 mm	12-fach
462 E	3,0 - 25,4 mm	- 0,5 mm	12-fach

Präzisionsspannzangen: ER 16, ER 25, ER 32, ER 40

D mm	d1 mm	L1 mm	Spannbereich mm	Spanntoleranz mm	Bestell-Nr.	Preis [PG 02]
17	3	27	bis 12 (426 E) ER 16	2,5-3,0	10174703	
17	4	27	bis 12 (426 E) ER 16	3,5-4,0	10174704	
17	5	27	bis 12 (426 E) ER 16	4,5-5,0	10174706	
17	6	27	bis 12 (426 E) ER 16	5,5-6,0	10174972	
17	7	27	bis 12 (426 E) ER 16	6,5-7,0	10174973	
17	8	27	bis 12 (426 E) ER 16	7,5-8,0	10174974	
17	9	27	bis 12 (426 E) ER 16	8,5-9,0	10174975	
17	10	27	bis 12 (426 E) ER 16	9,5-10,0	10174976	
17	11	27	bis 12 (426 E) ER 16	11,0	10190727	
17	12	27	bis 12 (426 E) ER 16	12,0	10190728	
26	3	34	bis 16 (430 E) ER 25	2,5-3,0	10174965	
26	4	34	bis 16 (430 E) ER 25	3,5-4,0	10174967	
26	5	34	bis 16 (430 E) ER 25	4,5-5,0	10174971	
26	6	34	bis 16 (430 E) ER 25	5,5-6,0	10017107	
26	8	34	bis 16 (430 E) ER 25	7,5-8,0	40002352	
26	10	34	bis 16 (430 E) ER 25	9,5-10,0	40002786	
26	12	34	bis 16 (430 E) ER 25	11,5-12,0	40002353	
26	14	34	bis 16 (430 E) ER 25	13,5-14,0	40003740	
26	16	34	bis 16 (430 E) ER 25	15,5-16,0	40002354	
33	3	40	bis 20 (470 E) ER 32	2,5-3,0	40005814	
33	4	40	bis 20 (470 E) ER 32	3,5-4,0	40008582	
33	5	40	bis 20 (470 E) ER 32	4,5-5,0	40012691	
33	6	40	bis 20 (470 E) ER 32	5,5-6,0	10002467	
33	7	40	bis 20 (470 E) ER 32	6,5-7,0	10002468	
33	8	40	bis 20 (470 E) ER 32	7,5-8,0	10002469	
33	10	40	bis 20 (470 E) ER 32	9,5-10,0	10002470	

	D mm	d1 mm	L1 mm	Spannbereich mm	Spanntoleranz mm	Bestell-Nr.	Preis [PG 02]
TOP	33	12	40	bis 20 (470 E) ER 32	11,5-12,0	10002471	
	33	13	40	bis 20 (470 E) ER 32	12,5-13,0	10002472	
	33	14	40	bis 20 (470 E) ER 32	13,5-14,0	10002473	
TOP	33	16	40	bis 20 (470 E) ER 32	15,5-16,0	10002474	
	33	18	40	bis 20 (470 E) ER 32	17,5-18,0	10002475	
	33	19	40	bis 20 (470 E) ER 32	18,5-19,0	40013253	
TOP	33	20	40	bis 20 (470 E) ER 32	19,5-20,0	10002476	
	41	3	46	bis 26 (472 E) ER 40	2,5-3,0	10176370	
	41	4	46	bis 26 (472 E) ER 40	3,5-4,0	10042169	
	41	5	46	bis 26 (472 E) ER 40	4,5-5,0	10142114	
	41	6	46	bis 26 (472 E) ER 40	5,5-6,0	40002325	
	41	7	46	bis 26 (472 E) ER 40	6,5-7,0	40013254	
	41	8	46	bis 26 (472 E) ER 40	7,5-8,0	10002480	
	41	10	46	bis 26 (472 E) ER 40	9,5-10,0	10002481	
	41	12	46	bis 26 (472 E) ER 40	11,5-12,0	10002482	
	41	13	46	bis 26 (472 E) ER 40	12,5-13,0	10002483	
	41	16	46	bis 26 (472 E) ER 40	15,5-16,0	10002484	
	41	18	46	bis 26 (472 E) ER 40	17,5-18,0	10002485	
	41	19	46	bis 26 (472 E) ER 40	18,5-19,0	10002486	
	41	20	46	bis 26 (472 E) ER 40	19,5-20,0	10002487	
	41	25	46	bis 26 (472 E) ER 40	24,5-25,0	10002488	
	41	26	46	bis 26 (472 E) ER 40	25,5-26,0	10002489	

Präzisionsspannzangen: 415 E, 462 E

	D mm	d1 mm	L1 mm	Spannbereich mm	Spanntoleranz mm	Bestell-Nr.	Preis [PG 02]
	25,5	5,0	40	bis 16 (415 E)	4,5-5,0	40011175	
	25,5	6,0	40	bis 16 (415 E)	5,5-6,0	40002318	
	25,5	6,5	40	bis 16 (415 E)	6,0-6,5	10002424	
	25,5	8,0	40	bis 16 (415 E)	7,5-8,0	40002320	
	25,5	9,5	40	bis 16 (415 E)	9,0-9,5	10017090	
	25,5	10,0	40	bis 16 (415 E)	9,5-10,0	10002425	
	25,5	12,0	40	bis 16 (415 E)	11,5-12,0	40002322	
	25,5	13,0	40	bis 16 (415 E)	12,5-13,0	10002426	
	25,5	14,0	40	bis 16 (415 E)	13,5-14,0	40005333	
	25,5	16,0	40	bis 16 (415 E)	15,5-16,0	10002427	
	32,9	3,0	52	bis 25,4 (462 E)	2,5-3,0	40003064	
	32,9	4,0	52	bis 25,4 (462 E)	3,5-4,0	40002435	
	32,9	5,0	52	bis 25,4 (462 E)	4,5-5,0	40002305	
TOP	32,9	6,0	52	bis 25,4 (462 E)	5,5-6,0	10002432	
	32,9	6,5	52	bis 25,4 (462 E)	6,0-6,5	10002433	
TOP	32,9	8,0	52	bis 25,4 (462 E)	7,5-8,0	40002306	
	32,9	9,5	52	bis 25,4 (462 E)	9,0-9,5	10002434	
TOP	32,9	10,0	52	bis 25,4 (462 E)	9,5-10,0	10002435	
TOP	32,9	12,0	52	bis 25,4 (462 E)	11,5-12,0	10002436	
	32,9	13,0	52	bis 25,4 (462 E)	12,5-13,0	10002437	
	32,9	14,0	52	bis 25,4 (462 E)	13,5-14,0	40002308	
TOP	32,9	16,0	52	bis 25,4 (462 E)	15,5-16,0	10002438	
TOP	32,9	18,0	52	bis 25,4 (462 E)	17,5-18,0	40002311	
	32,9	19,0	52	bis 25,4 (462 E)	18,5-19,0	10002439	
TOP	32,9	20,0	52	bis 25,4 (462 E)	19,5-20,0	10013431	
TOP	32,9	25,0	52	bis 25,4 (462 E)	24,5-25,0	40002313	
	32,9	25,4	52	bis 25,4 (462 E)	25,0-25,4	10002440	

39191 I Ersatzteil / Zubehör für Spannzangenfutter

Anzugsbolzen

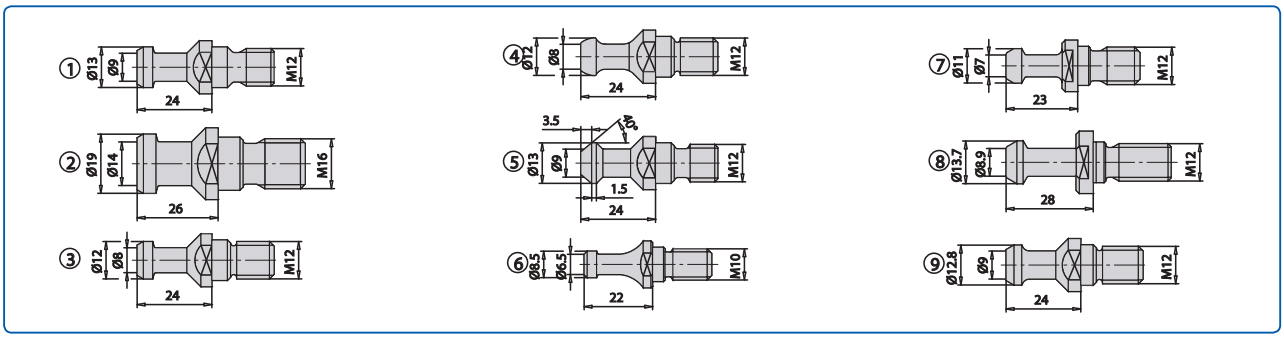

AB Nr.	Maschine	Abmessung mm	LZ	Bestell-Nr.	Preis [PG 02]
1	IMA, Maka, Reichenbacher, Weeke, Busellato, etc.	13/9 - M12		10006129	
2	IMA, Maka, Reichenbacher, Stegherr, etc.	19/14 - M16		10006130	
3	Biesse bis Bj. 09/1992	12/8 - M12	◊	10006133	
4	Biesse ab Bj. 09/1992 - Masterwood (HSD-Motoren)	12/8 - M12	◊	10006134	
5	Alberti, Masterwood (Colombo-Motoren)	13/9 - M12	◊	10006136	
6	Morbidelli, SCM	8,5/6,5 - M10	◊	10006131	
7	Shoda	11/7 - M12	◊	10006132	
8	Heian	13,7/8,9 - M12 JiS B 6339	◊	10006137	
9	CMS	12,8/9 - M12	◊	10006135	

Spannmutter, Hakenschlüssel für Spannzangenfutter

Bezeichnung	Gewinde	D mm	LZ	Bestell-Nr.	Preis [PG 02]
Spannmutter, kugelgelagert	M30x1,5	43	◊	10005969	
Spannmutter, kugelgelagert	M40x1,5	50		40012692	
Spannmutter, kugelgelagert	M48x2,0	60		10005970	
Spannmutter, kugelgelagert	M50x1,5	63		40004939	
Spannmutter, kugelgelagert	M19x1	22		10175069	
Hakenschlüssel	30/32			10205522	
Hakenschlüssel	40/42	M30 x 1,5	◊	10006109	
Hakenschlüssel	45/50	M40 x 1,5		10006110	
TOP Hakenschlüssel	52/55	M46	◊	10180589	
Hakenschlüssel	58/62	M48 x 2,0	◊	10006111	
Hakenschlüssel	ER16 mini	M19x1	◊	10174977	
Kombi-Hakenschlüssel	53 und 58/62			10203800	

Drehmomentschlüssel

Bezeichnung	Aufnahme mm	Nm	Bestell-Nr.	Preis [PG 02]
TOP Drehmomentschlüssel Typ 1	14 x 18	60-320	10203818	
Drehmomentschlüssel Typ 2	9 x 12	20-120	10205397	

Haken- / Rollenschlüssel

Bezeichnung	für Drehmo-mentschlüssel	für D mm	Adapter mm	Bestell-Nr.	Preis [PG 02]
TOP Kombi Einsteck-Hakenschlüssel	Typ 1	53 und 58/62	E 462	10203820	
Einsteck-Hakenschlüssel	Typ 1	50	ER 32	10203822	
Einsteck-Rollenschlüssel	Typ 2	30	ER 16	10205398	
NEU Einsteck-Spannschlüssel	Typ 2	22	ER 16 Mini	10205399	

81000 Kreissägeblatt-Aufnahme Nr. 21079
mit zylindrischem Schaft

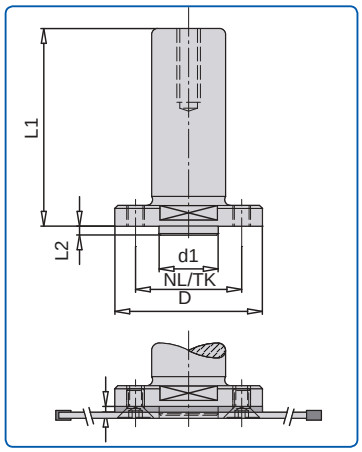

Anwendung: Direkte Aufnahme von Sägeblättern oder Nutfräsern mit gesenkten NL. Nabendicken von 2 - 10 mm;
Bei Stammblatt- bzw. Nabendicken bis 3,5 mm muss ein Distanzring (im Lieferumfang enthalten) montiert werden
Siehe Abbildung

Maschine: CNC Oberfräse

Ausführung: Das Werkzeug / Sägeblatt wird über 4 Senkkopfschrauben direkt gespannt

n (max) = 11.000 min-1

Schaft	D mm	d1 mm	L2 mm	L1 mm	SW mm	NL/TK	LZ	Bestell-Nr.	Preis [PG 02]
25	50	22	3	70	46	4/M4/36 4/M5/36	◊	10022138	
25	56	30	4	71	46	4/M5/42	◊	10014763	
20	60	30	4	90	46	4/M6/48	◊	40013258	
25	60	30	4	90	46	4/M6/48	◊	10002501	

Andere Abmessungen oder Teilkreise auf Anfrage möglich

Passende Kreissägeblätter - Nebenlöcher mit Ansenkung

D mm	B mm	b mm	d mm	NL	Z	Bestell-Nr.	Preis [PG 01]
150	3,2	2,2	30	4/6,5/48	24W	0039.152.32	
150	3,2	2,2	30	4/6,5/48	36W	0039.152.33	
150	3,2	2,2	30	4/6,5/48	48W	0039.152.34	
180	2,8	1,8	30	4/6,5/48	12F	0039.182.30	
180	3,2	2,2	30	4/6,5/48	30W	0039.182.33	
180	3,2	2,2	30	4/6,5/48	42W	0039.182.35	
180	3,2	2,2	30	4/6,5/48	54W	0039.182.32	
200	2,8	1,8	30	4/6,5/48	16F	0039.202.31	
200	3,2	2,2	30	4/6,5/48	36W	0039.202.34	
200	3,2	2,2	30	4/6,5/48	48W	0039.202.36	
200	3,2	2,2	30	4/6,5/48	60W	0039.202.38	

81000 Reduzierbuchse
mit Bund

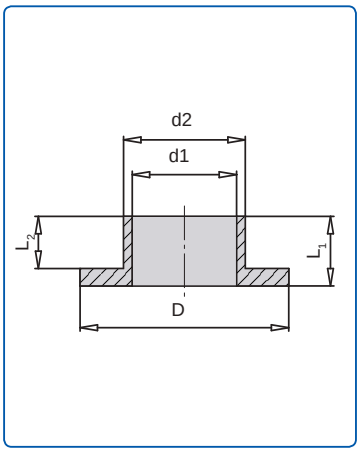

Anwendung: Paarweise Verwendung für die Reduzierung der Bohrung bei Fräsern und Messerköpfen

D mm	d1 mm	d2 mm	L2 mm	L1 mm	LZ	Bestell-Nr.	Preis [PG 02]
59	30	35	15	20	◊	10017296	
58	30	40	15	20	◊	10014724	
64	35	40	15	20	◊	10014726	
64	40	50	15	20	◊	10014727	

Weitere Abmessungen auf Anfrage lieferbar

81000 Buchse
für Ritzsägen

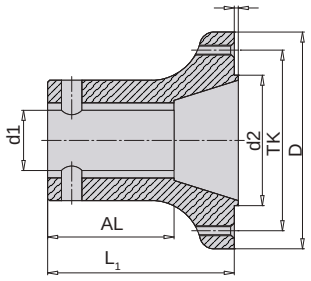

Anwendung: Aufnahme von Ritzsägeblättern für die Standardspindel Homag / IMA d=30 DKN

D mm	d1 mm	d2 mm	NL/TK	L1 mm	L2 mm	AL mm	Bestell-Nr.	Preis [PG 02]
108	30 DKN	65	6/M5/90	95	2	63	0031.000.14	

Zubehör Spanndeckel + Schraube

D mm	L	M1L	M2R	L1	L2	L3	L4	Bestell-Nr.	Preis [PG 02]
30	68	M16L		30		6,9	24	10190982	
30	68		M12R		50	6,9	24	10190983	

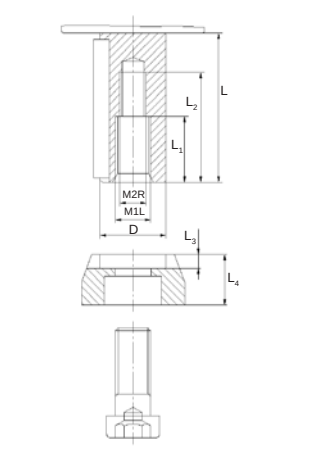

Lieferung ohne Spindelverschraubung; bei Bedarf bitte maschinenspezifisch mitbestellen

81000 Buchse
für Ritzsägen und Zerspaner

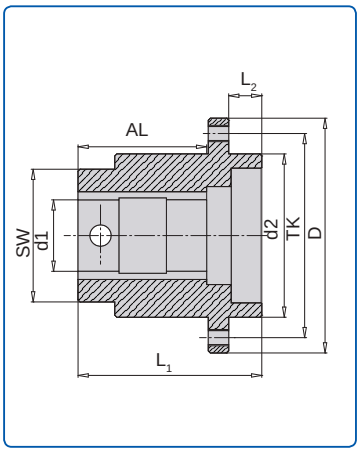

Anwendung: Aufnahme von Zerspanern für die Standardspindel Homag / IMA d=35 DKN

D mm	d1 mm	d2 mm	NL/TK	L1 mm	L2 mm	SW	AL mm	Bestell-Nr.	Preis [PG 03]
115	35 DKN	80	8/M8/100	90	16,2	55	63,0	0033.000.02	

Zubehör Homag Spindel

D mm	L	M1L	M2R	L1	L2	L3	L4	Bestell-Nr. Ring 50mm	Preis [PG 02]	Bestell-Nr. Befestigungs-element	Preis [PG 02]
35	70	M20L		30		3,0	16,0			10190973	
35	70		M16R		55	3,0	16,0			10190974	
35	120	M20L		30		3,0	16,0	10190980		10190973	
35	120		M16R		55	3,0	16,0	10190980		10190974	

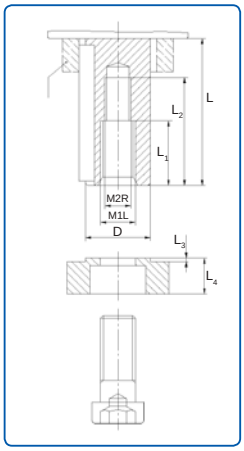

Zubehör Ima Spindel

D mm	L	M1L	M2R	L1	L2	L3	L4	Bestell-Nr. Ring 16 mm	Preis [PG 02]	Bestell-Nr. Befestigungs-element	Preis [PG 02]
35	93		M35x1,5R	25	45	34		10190985		10190986	
35	93	M16x55L		25	45		26,5	10190985		10190987	

Lieferung ohne Spindelverschraubung; bei Bedarf bitte maschinenspezifisch mitbestellen

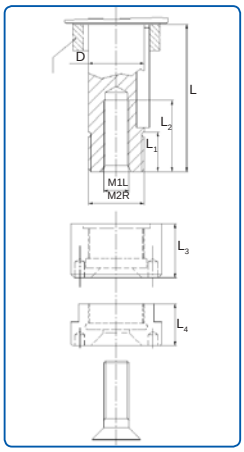

81000 Schnellspannsystem
Fixmatic P

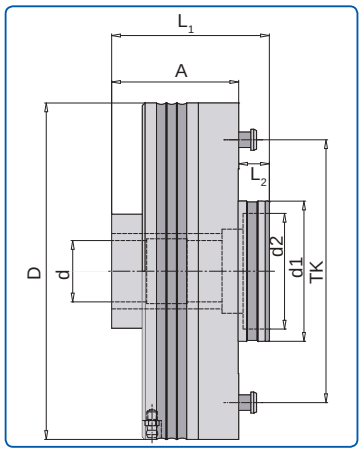

Anwendung:	Schnellwechsel von Fräswerkzeugen oder Kreissägeblättern; für Rechts- und Linkslauf geeignet Bajonettaufnahme im Werkzeug erforderlich
Maschine:	Doppelendprofiler
Ausführung:	Die Werkzeuge werden pneumatisch über Druckluft entspannt

D mm	d mm	d1 mm	d2 mm	TK mm	Anzahl Bolzen	L1 mm	L2 mm	A mm	LZ	Bestell-Nr.	Preis [PG 02]
110	30DKN		50	80	3	63		63	◊	0038.110.30	
110	35DKN		50	80	3	63		63	◊	0038.110.35	
147	35DKN	75	66	105	3	90	20	70	◊	0038.147.35	
147	40DKN	75	66	105	3	97	20	77	◊	0038.147.46	
160	35DKN		80	130	4	60		60	◊	0038.160.35*	
160	40DKN		80	130	4	60		60	◊	0038.160.40	
192	35DKN	80	66	150	4	90	17,5	72,5	◊	0038.192.35	
192	40DKN	80	66	150	4	97,5	17,5	80	◊	0038.192.46	

* Zentrieraufnahme D60 H7 wird benötigt - nicht im Lieferumfang enthalten
Fixmatic H (Hydro) auf Anfrage lieferbar
Lieferung ohne Spindelverschraubung; bei Bedarf bitte maschinenspezifisch mitbestellen

Maximales Gewicht der eingesetzten Werkzeuge

System D	Max. Gewicht Kg.
110	3
147	4
160	8
192	8

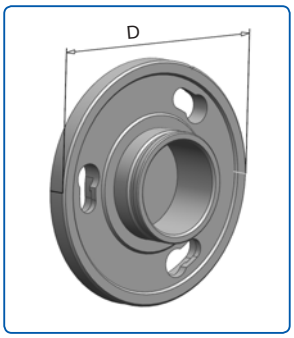

Ersatz Klemmflansch

D mm	für Montage	Re/Li	Bestell-Nr.	Preis [PG 02]
110	zwischen Klemmflansch (innen)	re od. li	0038.110.49	
110	vor Klemmflansch (aussen)	li	0038.110.51	
110	vor Klemmflansch (aussen)	re	0038.110.52	

Ersatzteile

Bezeichnung	Bestell-Nr.	Preis [PG 02]
Pneumatik Spiralschlauch	0038.000.05	

81000 Hydro Buchse
mit 6-Kant für Zerspaner und Fräswerkzeuge

Anwendung:	Aufnahme von Zerspanern oder Fräswerkzeugen für die Standardspindel HF Spindel mit 6-Kant
Maschine:	Doppelendprofiler
Ausführung:	Gehärtete Hydro-Spannelemente mit geschlosssenem Drucksystem. Die Spindelbefestigung ist nicht im Lieferumfang enthalten

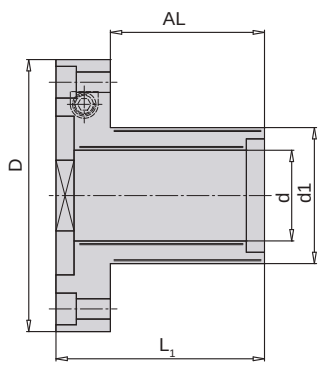

10138922

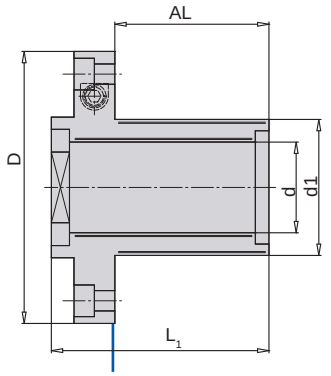

10151628

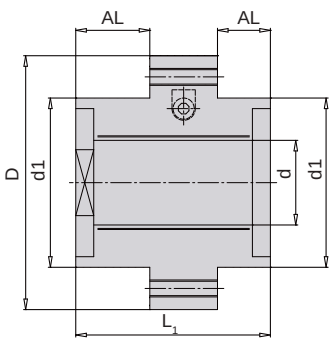

10138919

D mm	d mm	d1 mm	L1 mm	AL mm	LZ	Bestell-Nr.	Preis [PG 02]
120	40	60	92	68	◊	10138922	
120	40	60	96	68	◊	10151628	
120	40	80	92	25/35	◊	10138919	

Zubehör

Bezeichnung	D mm	Bestell-Nr.	Preis [PG 02]
Spindelbefestigung für 10138922 + 10151628	55	10104476	
Spindelbefestigung für 10151628	50	10162906	
Spindelbefestigung für 10138919	70	10104478	

Lieferung ohne Spindelverschraubung; bei Bedarf bitte maschinenspezifisch mitbestellen

81000 Hydro Buchse
mit Klemmring

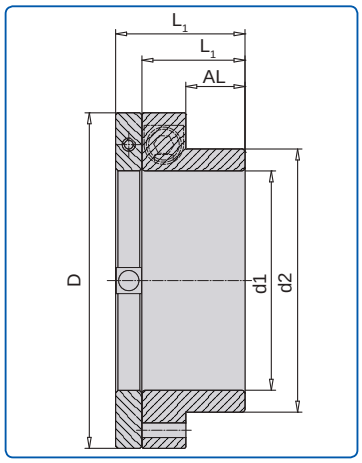

Anwendung:	Aufnahme von Sägen und Fräsern Frei auf der Welle verschieb- und positionierbar
Maschine:	Für Sägewellen (z.B. Paul Maschinen)
Ausführung:	Gehärtetes Hydro-Spannelement mit geschlossenem Drucksystem und integriertem Klemmring

d1 mm	d2 mm	D mm	L1 mm	AL mm	LZ	Bestell-Nr.	Preis [PG 02]
100	120	153	60/75	25	◊	40015531	
100	120	153	47/59	27	◊	10133148	
100	120	153	41/53	21	◊	10141520	

Accessories

Content

Accessories

Products	Page
Clamping wedges / dummy pieces	394-395
Screws	396-398
Keys / wrenches	399-400
Installation devices	401
Ball bearing liner	402
Conical wiper	403
Reducing ring for circular sawblades	404-405
AKE Cleaner Universal	405

Clamping wedges

Planer head with pressure jaws

Denomination	Dimension mm	DT	Order No.	Price [PG 02]
Clamping wedge	80	◊	10157182	
Clamping wedge	100	◊	10157183	
Clamping wedge	130	◊	10157222	
Clamping wedge	150	◊	10157223	
Clamping wedge	180	◊	10157336	
Clamping wedge	210	◊	10157227	
Clamping wedge	230		10157335	
Key	SW5	◊	10160237	

Centrifugal planer head

Denomination	Dimension mm	DT	Order No.	Price [PG 02]
Clamping wedge	60	◊	10157230	
Clamping wedge	80	◊	10157242	
Clamping wedge	100	◊	10157243	
Clamping wedge	130	◊	10157244	
Clamping wedge	150	◊	10157245	
Clamping wedge	170	◊	10157239	
Clamping wedge	180	◊	10157246	
Clamping wedge	190	◊	10157184	
NEU Clamping wedge	210	◊	10157240	
Clamping wedge	230	◊	10157247	
Clamping wedge	240	◊	10157241	

Clamping jaws for TOK planer heads

Denomination	Dimension mm	DT	Order No.	Price [PG 02]
Clamping wedge	6,5		10157160	
Clamping wedge	7,6	◊	10157229	
Clamping wedge	10	◊	40001968	
Clamping wedge	10,5	◊	10028146	
Clamping wedge for rebate cutter	28	◊	10023051	
Clamping wedge for glue joint cutter	48	◊	10157157	
Clamping wedge	48	◊	10110635	
Clamping wedge for rebate cutter	48	◊	10017268	
Clamping wedge for rebate cutter	58	◊	10017269	
Clamping wedge for glue joint cutter	58	◊	10110422	
Clamping wedge	78	◊	10110637	

Spare parts for swivel cutter head

Denomination	Dimension mm	DT	Order No.	Price [PG 02]
Swivelling element for B 50 mm	48	◊	10110639	
Swivelling element for B 80 mm	78	◊	10112938	

Clamping wedges - dummies

Clamping wedges for profile knives

Denomination	Dimension mm	DT	Order No.	Price [PG 02]
Clamping wedge	17,5	◊	10157128	
Clamping wedge	26	◊	10157129	
Clamping wedge	38	◊	10016489	
Clamping wedge	48	◊	10018714	
Clamping wedge	58	◊	10016488	
Clamping wedge	84	◊	10021472	

Clamping wedges / dummies for serrated profile cutter heads

Denomination	Dimension mm	DT	Order No.	Price [PG 02]
Clamping wedge	40	◊	40011422	
Clamping wedge	50	◊	10110628	
Clamping wedge	60	◊	10110631	
Clamping wedge	80	◊	10110393	
Clamping wedge	100	◊	40011650	
Clamping wedge	130	◊	10110395	
Clamping wedge	150	◊	10110396	
Clamping wedge	190	◊	10110397	
Clamping wedge	230	◊	10110398	
Dummy piece	40	◊	10110783	
Dummy piece	50	◊	10110784	
Dummy piece	60	◊	10110785	
Dummy piece	80	◊	10110786	
Dummy piece	100	◊	40011604	
Dummy piece	130	◊	40015377	
Dummy piece	150	◊	10110787	
Dummy piece	180	◊	10110788	
Dummy piece	230	◊	40012096	

Clamping wedges for routers

Denomination	Dimension mm	DT	Order No.	Price [PG 02]
Clamping wedge for routers	D 10/11 x 25	◊	10006194	
Clamping wedge for routers	D 12 x 20	◊	10006195	
Clamping wedge for routers	D 12 x 30	◊	10006196	
Clamping wedge for routers	D 14 x 30	◊	10006198	
Clamping wedge for routers	D 16 x 50	◊	10006199	
Clamping wedge for routers	28 mm rh	◊	40013574	
Clamping wedge for routers	35 mm rh	◊	10006184	
Clamping wedge for routers	38 mm	◊	10016489	
Clamping wedge for routers	58 mm	◊	10016488	

Screws

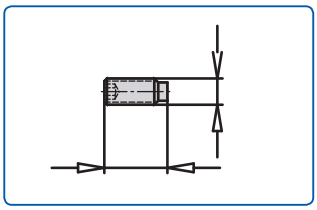

Fig: Threaded pin DIN 915

Denomination	Dimension mm	Key size	Order No.	Price [PG 02]
Threaded pin DIN 912 for swivelling cutter head	M5 x 16		10030678	
Threaded pin DIN 912 for swivelling cutter head	M6 x 8		10015777	
Threaded pin DIN 915	M8 x 16	SW 6	40002009	
Threaded pin DIN 915	M8 x 35	SW 6	40002014	

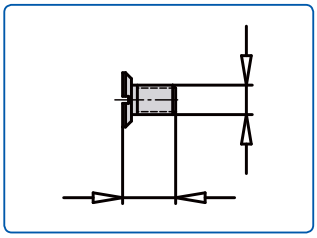

Fig: Countersunk screw DIN 963

Denomination	Dimension mm	Key size	Order No.	Price [PG 02]
Countersunk screw DIN 963	M5 x 8	Schlitz	40001969	
Countersunk screw DIN 963	M5 x 6	Schlitz	10119194	
Countersunk screw DIN 7991	M5 x 6	SW 4	40001968	
Countersunk screw DIN 7991 T	M5 x 6,1	T 20	40005305	

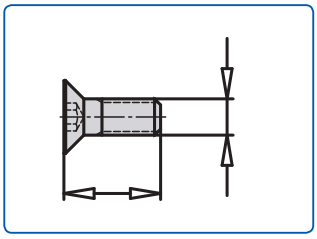

Fig: Countersunk screw DIN 7991

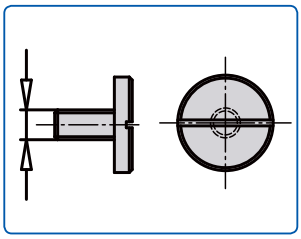

Fig: Stop screw

Denomination	Dimension mm	Order No.	Price [PG 02]
Stop screw	M5	40002938	
Stop screw for panel raising cutter	M6x10	10157166	

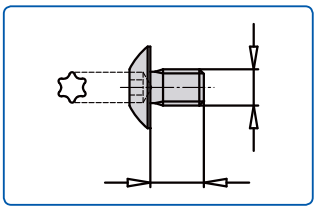

Fig: Torx clamping screw, big head

Denomination	Dimension mm	Key size	Order No.	Price [PG 02]
Torx clamping screw, big head	M4 x 5,9	T 15	10006039	
Torx clamping screw, big head	M4 x 4	T 15	10006040	
Torx clamping screw, big head	M3,5 x 4	T 15	10006038	
Torx clamping screw, big head	M3,5 x 6	T 15	10123471	
Torx clamping screw, big head	M4 x 59	T 15	40004987	

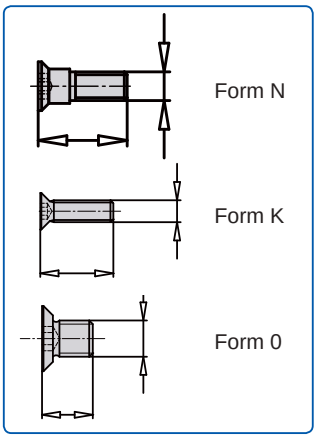

Denomination	Dimension mm	Key size	Order No.	Price [PG 02]
Torx countersunk screw form N	M5 x 15,5	T 20	40012392	
Torx countersunk screw form K	M5 x 12	T 20	10111291	
Torx countersunk screw form O	M5 x 7	T 15	10106762	
Torx countersunk screw form N	M5 x 11	T15	33014425	
Torx countersunk screw form N	M5 x 13	T 20	10110740	

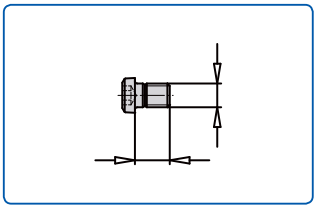

Fig: Torx countersunk screw form C

Denomination	Dimension mm	Key size	Order No.	Price [PG 02]
Torx round-head screw form C	M3 x 4,4	T 8	10006061	

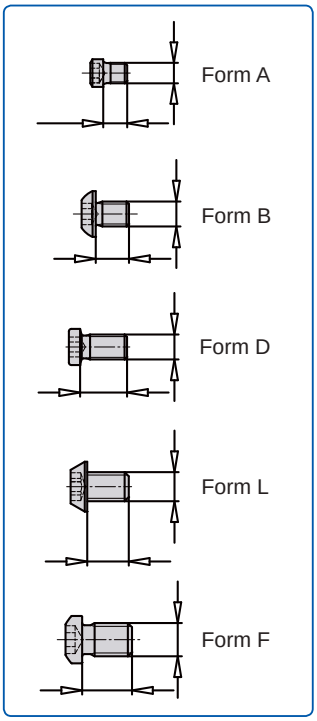

Denomination	Dimension mm	Key size	Order No.	Price [PG 02]
Torx clamping screw form A	M2,5 x 3,0	T 8	10006055	
Torx clamping screw form A	M2,5 x 4	T 8	10006056	
Torx clamping screw form B	M3 x 4,0	T 9	10006060	
Torx clamping screw form D	M3 x 7	T 8	10006057	
Torx clamping screw form L	M3,5 x 4,0	T 15	10006052	
Torx clamping screw form D	M3,5 x 5,5	T 15	10006058	
Torx clamping screw form L	M3,5 x 4,8	T 15	10006053	
Torx clamping screw form A	M4 x 5	T 15	10006063	
Torx clamping screw form F	M4 x 6	T 15	10006064	

Screws

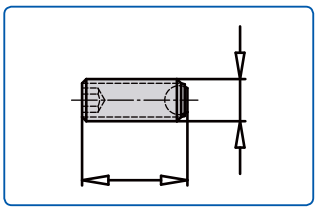

Fig: Ball pressure screw

Denomination	Dimension mm	Key size	Order No.	Price [PG 02]
Cover screw DIN 963	M3,5 x 6,0		10006006	
Ball pressure screw form B	M8 x 12	SW 4	10006035	
Ball pressure screw form B	M6 x 10	SW 4	40013521	

Denomination	Dimension mm	Order No.	Price [PG 02]
Hexagonal nut	M6	40013544	
Hexagonal nut	M4	40013542	
Hexagonal nut	M6 narrow	40015859	

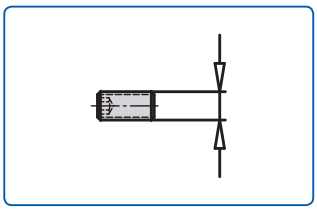

Fig: Threaded pin for counterbore DIN 913

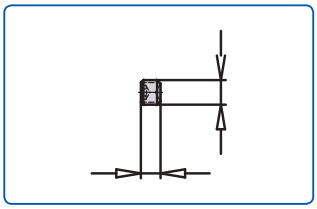

Fig: Threaded pin for counterbore DIN 916

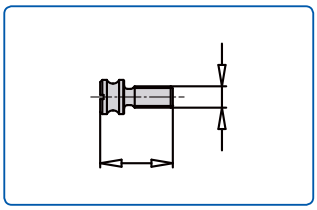

Fig: Length adjustment screw

Denomination	Dimension mm	Key size	Order No.	Price [PG 02]
Threaded pin for counterbore DIN 913	M6 x 6	SW 5	10005963	
Threaded pin for counterbore DIN 916	M6 x 5	SW 5	40001977	
Threaded pin for counterbore DIN 916	M6 x 4	SW 5	10032695	
Threaded pin for counterbore DIN 916	M5 x 4	SW 4	10033834	
Length adjustment screw for bore	M5 x 8	Schlitz	10006037	
Length adjustment screw, special design	M5		40013523	

Keys

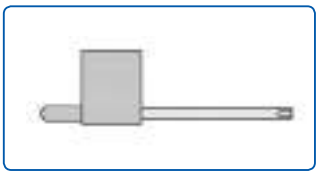

Fig: Flag-type-key

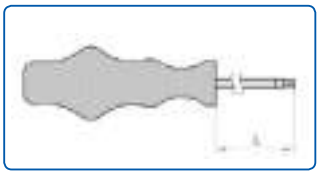

Fig: Handle key

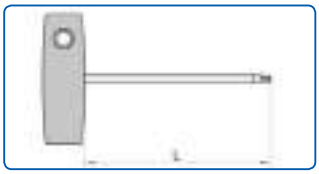

Fig: Sliding bar key

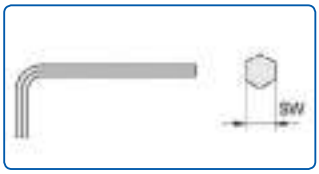

Fig: Allen key

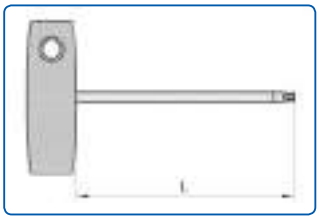

Fig: Sliding bar key

Fig: Hook wrench

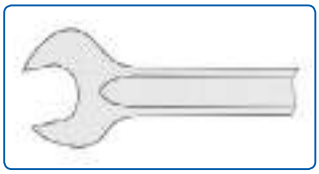

Fig: Open-jaw wrench

Denomination	Dimension mm	Key size	Order No.	Price [PG 02]
Flag-type-key		T 7	10006042	
Flag-type-key		T 8	10006043	
Flag-type-key		T 9	10020371	
Flag-type-key		T 15	10006049	
Handle key	L 60	T 8	10006044	
Handle key	L 60	T 9	10006045	
Handle key	L 80	T 10	10006047	
Handle key	L 80	T 15	10006050	
Handle key	L 100	T 20	10006041	
Sliding bar key	L 100	T 9	40004177	
Sliding bar key	L 100	T 10	40005684	
Sliding bar key	L 100	T 15	40005685	
Sliding bar key	L 100	T 20	40005686	
Allen key		SW 2	40005625	
Allen key		SW 3	10006089	
Allen key		SW 4	40009460	
Allen key		SW 5	40009461	
Allen key		SW 6	10014156	
Allen key		SW 8	40013533	
Allen key		SW 10	10138894	
Sliding bar key	100	SW 3	10017980	
Sliding bar key	100	SW 4	40004852	
Sliding bar key	100	SW 5	40005680	
Sliding bar key	100	SW 6	40005681	
Sliding bar key	150	SW 8	40004852	
Sliding bar key	150	SW 8	40013539	
Sliding bar key	100	SW 10	40013540	
Sliding bar key	200	SW 10	40013541	
Hook wrench	30/32		10205522	
Hook wrench	40/42	M30 x 1,5	10006109	
Hook wrench	45/50	M40 x 1,5	10006110	
TOP Hook wrench	52/55	M46	10180589	
Hook wrench	58/62	M48 x 2,0	10006111	
Hook wrench	ER16 mini	M19x1	10174977	
Combination hook spanner key	53 and 58/62		10203800	
Open-jaw wrench		SW 13	40013548	
Open-jaw wrench		SW 27	10028508	
Open-jaw wrench		SW 33	40013549	
Open-jaw wrench		SW 41	40013551	
Open-jaw wrench		SW 46	10019055	
Open-jaw wrench		SW 60	40013552	

Keys / wrenches
Torque spanner & accessories

Torque spanner

	Denomination	Tool holder mm	Nm	Order No.	Price [PG 02]
TOP	Torque spanner Type 1	14 x 18	60-320	10203818	
	Torque spanner Type 2	9 x 12	20-120	10205397	

Delivery without hook spanner key / roller wrench

Hook spanner key / roller wrench

	Denomination	for torque spanner	for D mm	Adapter mm	Order No.	Price [PG 02]
TOP	Combination hook spanner key	Type 1	53 and 58/62	E 462	10203820	
	Hook spanner key	Type 1	50	ER 32	10203822	
	Roller wrench	Type 2	30	ER 16	10205398	
NEU	Hook spanner key	Type 2	22	ER 16 mini	10205399	

Installation devices
Mounting rack for all standard holders

Application: Safe clamping of the tool set when mounted or removed and also during the change of knives with TOK tools

Design: Easy tensioning by means of clamping lever

Shank mm	DT	Order No.	Price [PG 02]
SK 40	◊	10002577	
HSK 63 F	◊	10002580	
HSK 85 (Powerlock)	◊	40015764	

Installation devices for other interfaces on request

Installation devices
Masterclamp

Application: Fast and safe mounting and clamping of tools in chucks, on cutter arbors and with saw blade flanges

for chucks	DT	Order No.	Price [PG 02]
HSK 25	◊	10163751	
HSK 32 (C3)	◊	10163752	
HSK 40 (C4)	◊	10163753	
HSK 50 (SK 30)	◊	10163754	
TOP HSK 63 (SK 40)	◊	10163755	
HSK 80	◊	10163756	
SK 50	◊	10163757	
HSK 100	◊	10163758	

Ball bearing liner type A

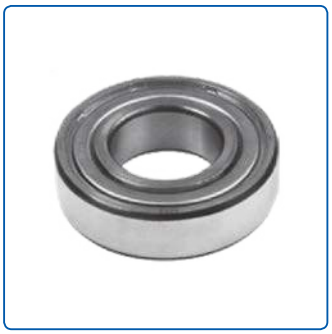

Application: To hold ball bearings

Design: Dust-proof design;
Ball bearings of different diameters can be mounted;
Type A: Ball bearing without collar

D mm	d mm	Order No.	Price [PG 02]
62	30	10009757	

Locking washer for ball bearing type A

D mm	d mm	Order No.	Price [PG 02]
64	30	10009758	

Ball bearing type A

Design: With force fit seat, to be pressed on the ball bearing

D mm	d mm	Order No.	Price [PG 02]
70	62	10009763	
75	62	10009764	
80	62	10009765	
85	62	10009766	
90	62	10009767	
95	62	10009770	
100	62	10009772	
105	62	10009775	
110	62	10009777	
115	62	10009780	
120	62	10009782	
125	62	10009785	
130	62	10009787	
135	62	10009790	
140	62	10009791	
145	62	10009794	
150	62	10009795	

Conical wiper for HSK 63 F, SK 40

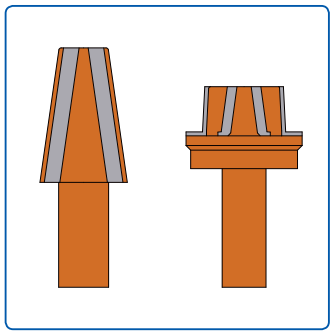

Application: Cleaning the level surfaces and conical surfaces of HSK 63 F in one single process. Precise run-out and maximum power transmission due to regular cleaning of the tool holder

Design: HSK 63 F made of hard PVC, SK 30/40 and MK 2 of hard wood with genuine leather surfacing

Shank	Order No.	Price [PG 02]
HSK 63 F	40003256	
SK 40	40002582	

0590 Reducing ring
for circular saw blades

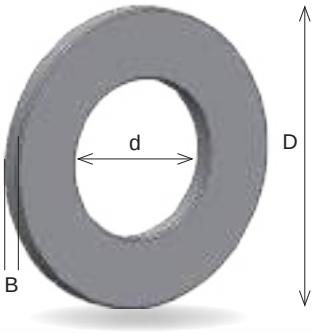

Application: Reduction of the saw blade bore
The reducing ring has to be wide enough to avoid the ring from moving into the flange gap. When using a reducing ring the saw blade still has to be sufficiently secured by the flange

Design: Serrated

D mm	B mm	d mm	Order No.	Price [PG 01]
16	1,60	12,7	059101607	
16	1,60	13	059101613	
20	1,60	12,7	059102007	
20	1,60	15,875	059102087	
20	1,60	16	059102016	
20	1,60	18	059102018	
22	1,60	16	059102216	
22	2,00	16	059202216	
22	1,60	20	059102220	
22	2,00	20	059202220	
25	2,00	15,875	059102587	
25	2,00	16	059102516	
25	2,00	20	059102520	
25	2,00	22,225	059102522	
30	2,00	15	059103015	
30	2,20	15	059203015	
30	2,00	15,875	059103087	
30	2,20	15,875	059203087	
30	2,00	16	059103016	
30	2,20	16	059203016	
30	2,00	18	059103018	
30	2,20	18	059203018	
NEU 30	1,60	20	059003020	
30	2,00	20	059103020	
30	2,20	20	059203020	
30	2,00	22	059103022	
30	2,40	22	059203022	
30	2,00	25	059103025	
30	2,20	25	059203025	
30	2,00	25,4	059103054	
30	2,20	25,4	059203054	
30	2,80	25,4	059303054	
30	2,20	28	059030528	
32	2,00	20	059103220	
32	2,20	20	059203220	
32	2,00	22	059103222	
32	2,00	25	059103225	
32	2,20	25	059203225	
32	2,00	30	059103230	
32	2,20	30	059203230	

0590 Reducing ring
for circular saw blades

D mm	B mm	d mm	Order No.	Price [PG 01]
35	2,00	20	059103520	
35	2,20	20	059203520	
35	2,00	25	059103525	
35	2,20	25	059203525	
35	1,60	30	059103530	
35	2,00	30	059203530	
35	2,20	30	059303530	
35	2,80	30	059403530	
40	1,60	30	059104030	
40	2,00	30	059204030	
40	1,60	32	059104032	
40	2,00	32	059204032	
40	1,60	35	059104035	
40	2,00	35	059204035	
50	2,80	30	059105030	
60	2,80	30	059106030	
70	2,80	30	059107030	
75	2,80	30	059107530	
80	2,80	30	059108030	

8888 AKE Multi - Clean
Cleaning supply - Fast removal of resin

For being able to use our products for a long time, regular cleaning is very important.

This cleaning contributes significantly to an optimal tool service life and cutting quality. With a cleaned tool you also counteract an enhanced power consumption of the machine and thus higher electricity costs.

Our Multi-Clean tool cleaner is an effective universal cleaner for dirty tools. We therefore recommend to only use the AKE Multi-Clean. It removes resin and heavily stained of circular saw blades, cutters and drills quickly and residue-free.

Denomination	Order No.	Price [PG 03]
1 Liter spray bottle	8888.000.04	
5 Liter canister	8888.000.05	
10 Liter canister	8888.000.06	

Attention: Removing resin from tools pays off. Resin reduces the tool service life, worsen the cutting quality and increase the electricity costs.

Safety information for tools

Please read prior to installation and operation

The tools conform to standard DIN-EN 847-1/2.

Tools should be stored in their original packing or in other appropriate packing. Tools should be stored in dry conditions and away from aggressive substances. There is always the danger of injury due to the sharpness of the tools. Tools must only be used as designated. Cutting in feed direction is only permissible for mechanical feed. The direction of rotation must be observed. The maximum allowed operating speed must not be exceeded. The machine manufacturer´s regulations must be adhered to. If in any doubt please contact AKE Knebel GmbH & Co. KG and/or the machine manufacturer. Check tools carefully for any signs of damage or defects prior to installation. Do not install the tool if there are any recognisable defects or damages, if already installed, stop operation immediately, remove tool and mark the tool clearly so that it cannot be installed prior to being checked by a competent person. Tools showing cracks or similar damages must not be welded or repaired in any form. Only trained persons with the necessary safety training are allowed to install tools and commence operation of the machine. Adhere to the operation manual of both the tools and the machine. Ensure the machine cannot be started. Tools should only be installed using the clamping mechanism as provided by the machine manufacturer, recommended starting torque should be observed, no other form of installation or tightening is allowed. The European standard. DIN-EN 1870-1, chapter 3.2.3. is applicable for allocating the appropriate clamping flange diameter to the saw blade diameter. Gloves must be worn, as should close-fitting clothes and ear protection when necessary. Once the tool has been installed, please ensure that all safety protection devices and the splitting wedge are mounted correctly. A test run by a trained person must be carried out. Do not reach anywhere near the rotating tool. No uninvolved persons should be near this area. Do not undertake any adjustments near the rotating tool. Make sure there is no imbalance. The cutting edge of the tool must not come into contact with any other cutting tools, fixing elements or any other parts of the machine Bore hole reduction rings must be firmly fixed to the tool and must not project over the tool body. Reducing rings must be the correct size to ensure that the tool is fixedcorrectly. Never leave the operating machine unattended. All measures to prevent kick back must be taken, all corresponding devices must be applied. The working material must be checked for any foreign matter. The tool must be re-sharpened in due time. Indications for blunt tools are: extreme wear and tear on the cutting edges, broken edges, poor cutting quality and higher energy consumption by the machine. Saw blades with cutting teeth of less than 1 mm must not be used. Tools must only be re-sharpened by competent personnel and must only be repaired using original parts. Competent persons are those with corresponding training and experience who have knowledge of the design, designation and safety requirements of the tool. Tools must only be repaired in compliance with the manufacturers instructions. The following must be observed: the tool design must not be altered, all safety regulations must be adhered to, the applicable tensioning tolerances must be observed.

Overview material pictograms

Fig.: Solid wood

Fig.: Solid wood , dry

Fig.: Solid wood, moist

Fig.: Solid wood, wet

Fig.: Solid wood, soft

Fig.: Solid wood, hard

Fig.: Wood

Fig.: Exotic wood

Fig.: Panel material

Fig.: Plastic coated and film coated wood-based material, veneered wood-based material

Fig.: Plywood

Fig.: Chipboard

Fig.: Plywood

Fig.: MDF

Fig.: Multiplex

Fig.: HPL

Fig.: Veneer packs

Fig.: Paper-based laminate; Pertinax

Fig.: Aerated concrete; Fibre cement

Fig.: Abrasive

Fig.: Circuit board

Fig.: plastic material

Fig.: Synthetic resin; Epoxide; Fibreglass

Fig.: Twin-Wall Sheets

Fig.: Thermoplastic material, hard; PVC; ABS

Fig.: Thermoplastic material, soft; PP

Fig.: Duroplastic material

Fig.: thermosetting plastic

Fig.: thin acrylic glass; PMMA

Fig.: Aluminium; Non-ferrous metal

Fig.: Copper; Brass

Fig.: Aluminium profile

Fig.: Aluminium, rod and pipe

Fig.: Aluminium, solid material

Fig.: Metal

Notes

Key

Abbre-viation	Description
a. A.	Available on request
AW	Axial angle
B	Cutting width/kerf
b	Thickness of tool body
b_1	Hub thickness
D	Tool diameter
d	Diameter of bore
d (max)	Maximum bore diameter (technically feasible)
D1	basic diameter
DKN	Double keyway
DP	Polycrystalline diamond tipped
DT	Delivery time
E	One side acute
F	Flat tooth
FFT	Flat / flat / triple-chip
Fig.	Figure
FLD max	Maximum usable flange diameter
FS	Flat tooth with alternating chamfer
FT	Flat tooth / triple-chip
FW	FlexWing. Variable tooth pitch
H	Cutting height with stepped tool body
HDF	Hollow tooth / inverted V / flat
HFFT	Triple-chip / flat / flat hollow ground
HFT	Hollow tooth / triple-chip / flat
HL	High-alloyed steel
HS	High-alloyed high performance steel
HSK	Hollow taper shank
KN	Keyway
KS	Cooling slot
L1	Total length
L2	Working length
lhs	left-hand side
LZ	Delivery time
m/min	Meter per minute
MAN	Manual feed

Abbre-viation	Description
Machine	Suitable for machine type
MEC	Mechanical feed
min^{-1}	Revolutions per minute
mm	Millimeter
n	No. of revolutions rpm
n (max)	Maximum rpm (allowance)
NEW	New article
NL	Pinholes
NLK	Pinhole combina-tion 2/7/42 + 2/9/46,5 + 2/10/60
BH	Tip height
PT max	max. usable profile width
R	Radius
R / L	Direction of rotation (mode)
rhs	Right-hand side
S	Shank
SDB	With chip-thickness limiter
SK	Shank taper
SP	Low-alloy tool steel
SW	Key values
T	Triple chip tooth
TC	Carbide tipped
TOP	Topseller
TT	Triple chip/triple chip tooth
V	Spur
Vf	Feed rate
W	Alternate top bevel tooth
W, FA	Alternate top bevel tooth, chamfered
Z	Number of teeth
Z / AS	Tooth shape / Number of teeth
□	While stocks last
◊	Available within short notice
○	On request
°	Degree
♪	Soundstar
6kt.	Hexagonal

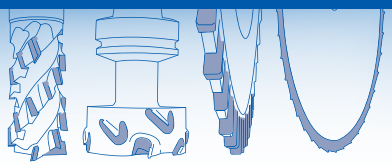

AKE
Cutting & better

chip'n chill
Cutting 2.0

reddot award 2014
honourable mention

Hauptpreis
VR-InnovationsPreis Mittelstand 2014

1. Platz
WOODEX INNOVATIONSPREIS 2013

1. Platz
LIGNA INNOVATIONSPREIS 2013

The new age of Cutting 2.0 started in 2013 with the first presentation of the award-winning SuperSilent sizing saw blade. With Cutting 2.0 we always pursue one objective: Creating unique advantages for our customers.

AKE Knebel GmbH & Co. KG

Hölzlestraße 14 + 16
72336 Balingen
Germany

Phone: +49 (7433) 261-0
Fax: +49 (7433) 261-100
E-Mail: info@ake.de

AKE Knebel GmbH & Co. KG

Branch office Rietberg
Konrad-Adenauer-Straße 32
33397 Rietberg, Germany

Phone: +49 (5244) 9 20 20
Fax +49 (5244) 9 20 280
E-Mail: info@ake.de

AKE Knebel GmbH & Co. KG

Branch office Prien
Am Mühlbach 6
83209 Prien, Germany

Phone: +49 (8051) 96 56 78 0
Fax +49 (8051) 96 56 78 19
E-Mail: info@ake.de

Please visit us at www.ake.de

Subject to technical changes. Printed in Germany 2019-07-19

www.ake.de